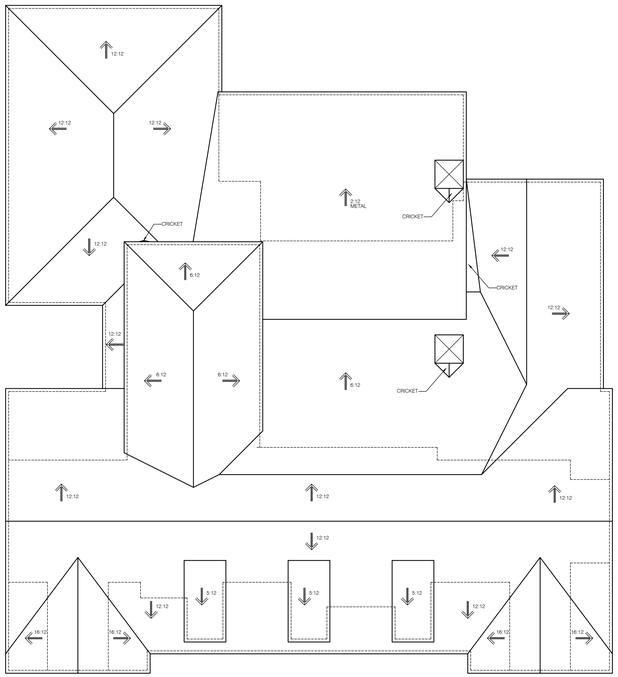

1 ROOF PLAN
SCALE: 1/8"=1'-0"

LOT COVERAGE	
LOT SIZE	10,239 SQ/FT
FOUNDATION AREA	4,177 SQ/FT
PERCENTAGE	40%

AREA TABULATION:	
FIRST FLOOR A/C:	3,228 sq.ft.
SECOND FLOOR A/C:	1,338 sq.ft.
TOTAL A/C:	4,566 sq.ft.
GARAGE:	510 sq.ft.
FRONT PORCH	22 sq.ft.
COVERED PATIO	417 sq.ft.
TOTAL SLAB:	4,177 sq.ft.
TOTAL AREA UNDER ROOF:	5,515 sq.ft.

CITY OF DALLAS GREEN ORDINANCE

- LAVATORY FAUCETS TO COMPLY WITH CITY OF DALLAS GREEN ORDINANCE, AVERAGE FLOW RATE 2.0 GPM OR LESS.
- SHOWERHEADS TO COMPLY WITH CITY OF DALLAS GREEN ORDINANCE, AVERAGE FLOW RATE 2.0 GPM OR LESS.
- RADIANT BARRIER HEAT ISLAND MITIGATION
- PENETRATIONS AND CRACKS MUST BE SEALED
- DISHWASHER-ENERGY STAR DISHWASHER USING 6.0 GALLONS OR LESS PER CYCLE.
- DOORS - WEATHER STRIPPING TO BE INSTALLED.
- MAXIMUM LAMP WATTAGE FOR INCANDESCENT BULBS IS 100 WATTS± COMPACT FLUORESCENT IS 32 WATTS
- LANDSCAPE - DRIP IRRIGATION EMITTERS MUST BE USED FOR ALL BIDDINGS AREA OF AN APPROVED LANDSCAPE PLAN.
- ROOF - ANY ROOF WITH A PITCH GREATER THAN 2:12 MUST HAVE AN ENERGY STAR QUALIFIED ROOF± UNLESS IT IS A VEGETATIVE ROOF WHICH HAS BEEN APPROVED BY THE BUILDING OFFICIAL.
- HVAC/INDOOR AIR QUALITY - ALL AIR-HANDLING EQUIPMENT & DUCTWORK MUST BE OUTSIDE THE FIRE-RATED ENVELOPE OF THE GARAGE. SURFACES BETWEEN CONDITION SPACE & AN ATTACHED GARAGE MUST BE TIGHTLY SEALED. AIR FILTER MUST BE INSTALLED THAT HAVE A MINIMUM REPORTING VALUE (MERV) EQUAL TO OR GREATER THAN 8.
- 70% of the non-roof area must have (will have) vegetative landscape, permeable paving or sloped for water runoff to a permanent filtration feature.

N

SITE PLAN
SCALE: 1/8"=1'

4104 DUNHAVEN RD
LOT 1, BLOCK D/6147
NORTHWAY ESTATES
CITY OF DALLAS
DALLAS COUNTY, TEXAS

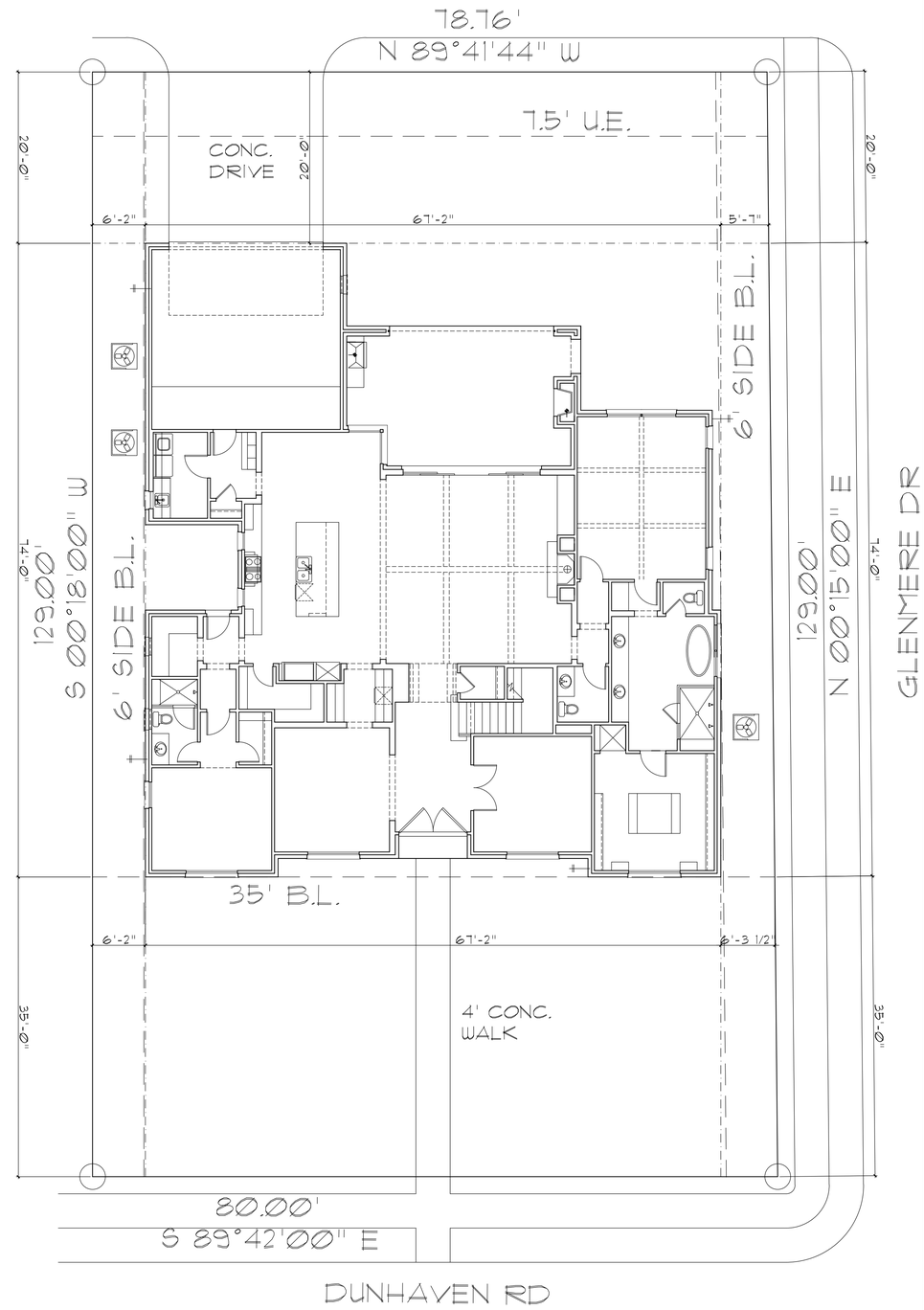

WDG

WATSON DESIGN GROUP
3537 W. 7TH SUITE 5
FORT WORTH, TEXAS
0.817.882.8882
WATSONDESIGNGROUP.COM

Copyright, S. Watson Design, Inc. – 2018

These plans are intended to provide the basic construction information necessary to substantially complete this structure. These plans must be verified and checked by the builder or purchaser prior to the start of construction. Any discrepancies and/ or omission, if found, is to be brought to the immediate attention of the designer before any construction is commenced or purchase made. It is recommended that the owner or builder obtain a complete set of mechanical, electrical, plumbing, Structural, before beginning construction of any kind. Note: All Federal, State, and Local codes, ordinances, and restrictions take precedence over any part of this plan. Any deviation with money, cost and time involved must be approved before and during construction. These plans, and their use are the property of Watson Design and are not to be used for construction, reused, traced, or reproduced by any means without the expressed written consent of Watson Design. All rights reserved

OLERIO HOMES
4104 DUNHAVEN RD
LOT 1, BLOCK D/6147
NORTHWAY ESTATES
CITY OF DALLAS
DALLAS COUNTY, TEXAS

PLAN NUMBER
12456618

DATE
12/12/2018

SHEET NUMBER
A1

SCALE 24X36 1/4"=1'

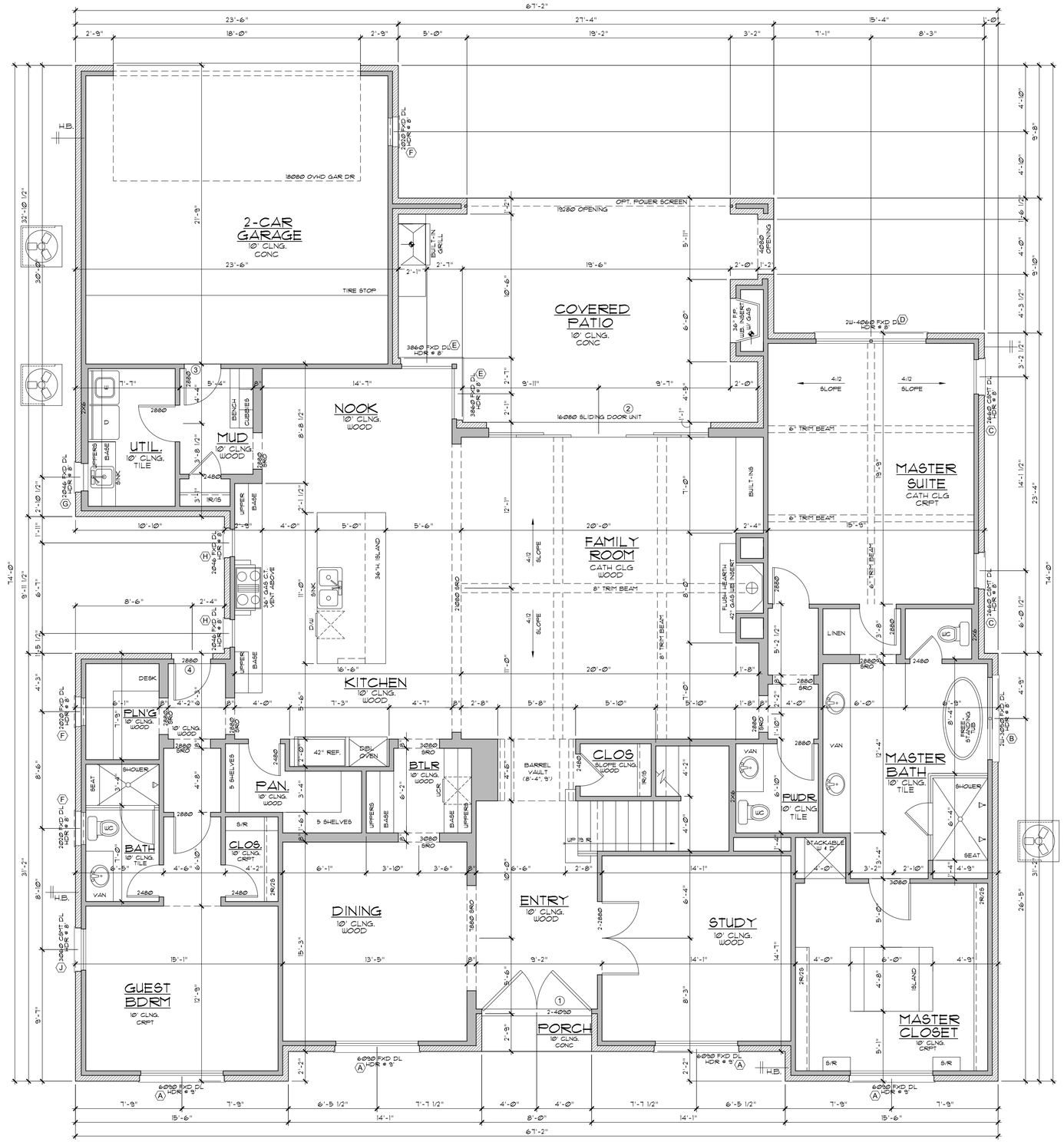

1 GROUND FLOOR PLAN
SCALE: 1/4"=1'-0"

AREA TABULATION:	
FIRST FLOOR A/C:	3,228 sq.ft.
SECOND FLOOR A/C:	1,338 sq.ft.
TOTAL A/C:	4,566 sq.ft.
GARAGE:	510 sq.ft.
FRONT PORCH	22 sq.ft.
COVERED PATIO	417 sq.ft.
TOTAL SLAB:	4,177 sq.ft.
TOTAL AREA UNDER ROOF:	5,515 sq.ft.

WDG

WATSON DESIGN GROUP
3537 W. 7TH SUITE 5
FORT WORTH, TEXAS
0.817.882.8882
WATSONDESIGNGROUP.COM

Copyright, S. Watson Design, Inc. – 2018

These plans are intended to provide the basic construction information necessary to substantially complete this structure. These plans must be verified and checked by the builder or owner prior to construction. Any discrepancies, errors, omissions and / or omission, if found, is to be brought to the immediate attention of the designer before any construction is commenced or purchase made. It is recommended that the owner and builder obtain complete drawings which include Mechanical, Electrical, Structural, before beginning construction of any kind. Note: All Federal, State, and Local codes, ordinances, and restrictions take precedence over any part of these plans which may conflict with same, and must be strictly adhered and followed before and during construction. These plans, and their use are the property of Watson Design and are not to be used for construction, reused, traced, or reproduced by any means without the expressed written consent of Watson Design. All rights reserved

OLERIO HOMES
4104 DUNHAVEN RD
LOT 1, BLOCK D/6147
NORTHWAY ESTATES
CITY OF DALLAS
DALLAS COUNTY, TEXAS

PLAN NUMBER
12456618

DATE
12/12/2018

SHEET NUMBER
A2

SCALE 24X36 1/4"=1'

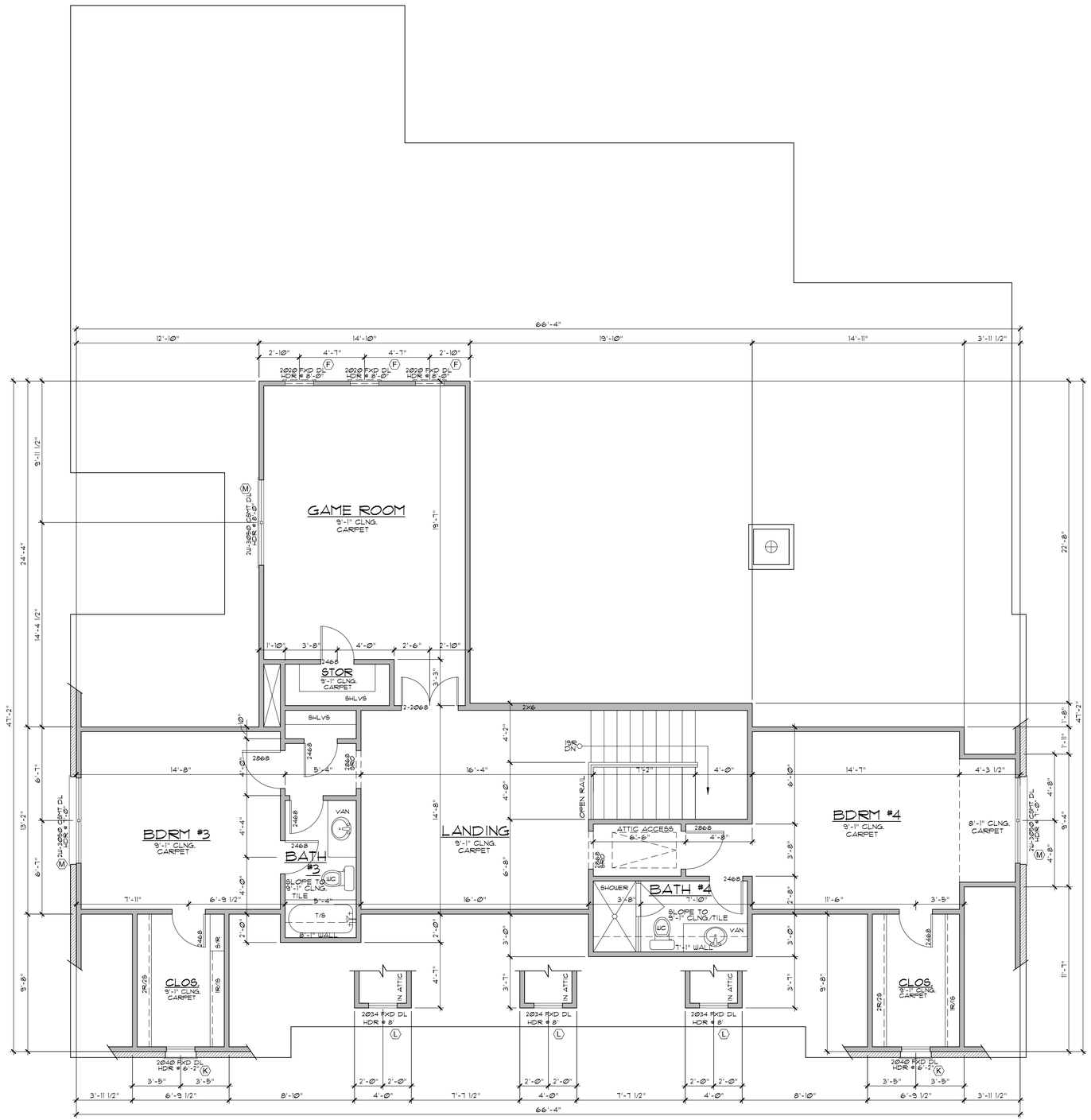

1 SECOND FLOOR PLAN

SCALE: 1/4"=1'-0"

WDG

WATSON DESIGN GROUP
3537 W. 7TH SUITE 5
FORT WORTH, TEXAS
0.817.882.8882
WATSONDESIGNGROUP.COM

Copyright, S. Watson Design, Inc. – 2018

These plans are intended to provide the basic construction information necessary to substantially complete this structure. These plans must be verified and checked by the builder or the owner in full prior to the start of this project. Any discrepancy, error, and / or omission, if found, is to be brought to the immediate attention of the designer before any construction is commenced or purchases made. It is recommended that the owner or builder also provide drawings and specifications for Plumbing, Electrical, Structural, before beginning construction of any kind. Note: All Federal, State, and Local codes, ordinances, and restrictions take precedence over any part of these plans which may conflict with same, and must be strictly adhered and followed before and during construction. These plans, and their use are the property of Watson Design and are not to be used for construction, reused, traced, or reproduced by any means without the expressed written consent of Watson Design. All rights reserved

OLERIO HOMES
4104 DUNHAVEN RD
LOT 1, BLOCK D/6147
NORTHWAY ESTATES
CITY OF DALLAS
DALLAS COUNTY, TEXAS

PLAN NUMBER
12456618

DATE
12/12/2018

SHEET NUMBER
A3

SCALE 24X36 1/4"=1'

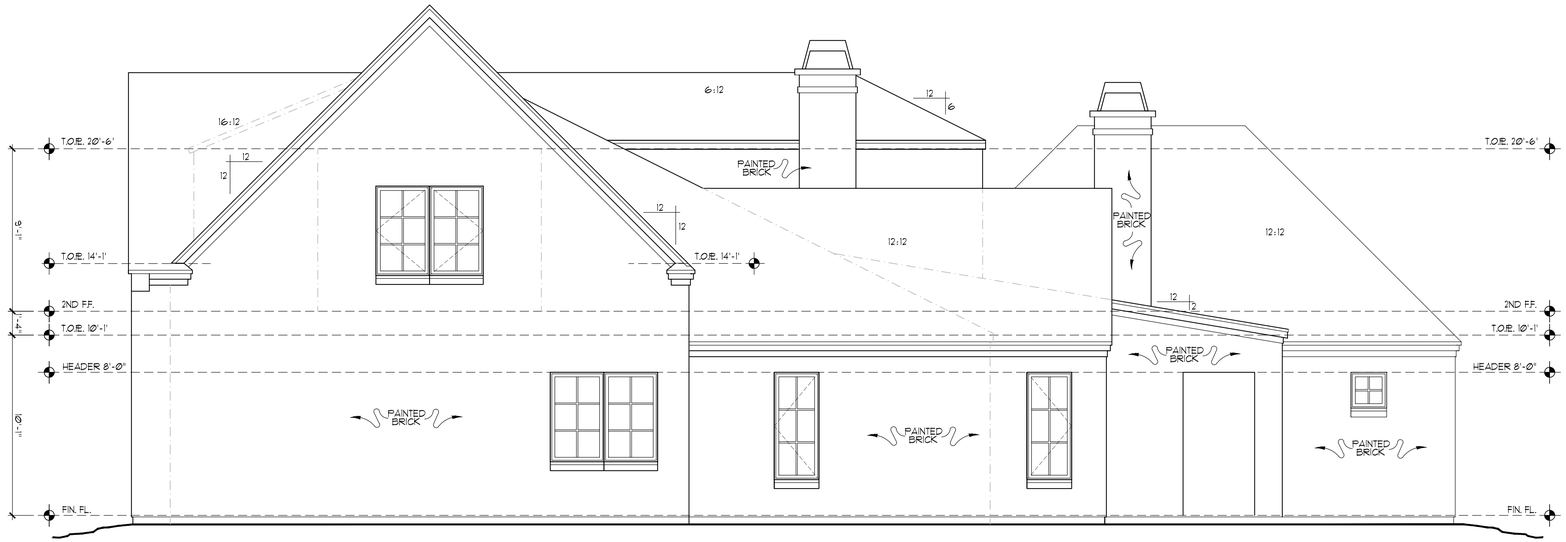

2 RIGHT ELEVATION
SCALE: 1/4"=1'-0"

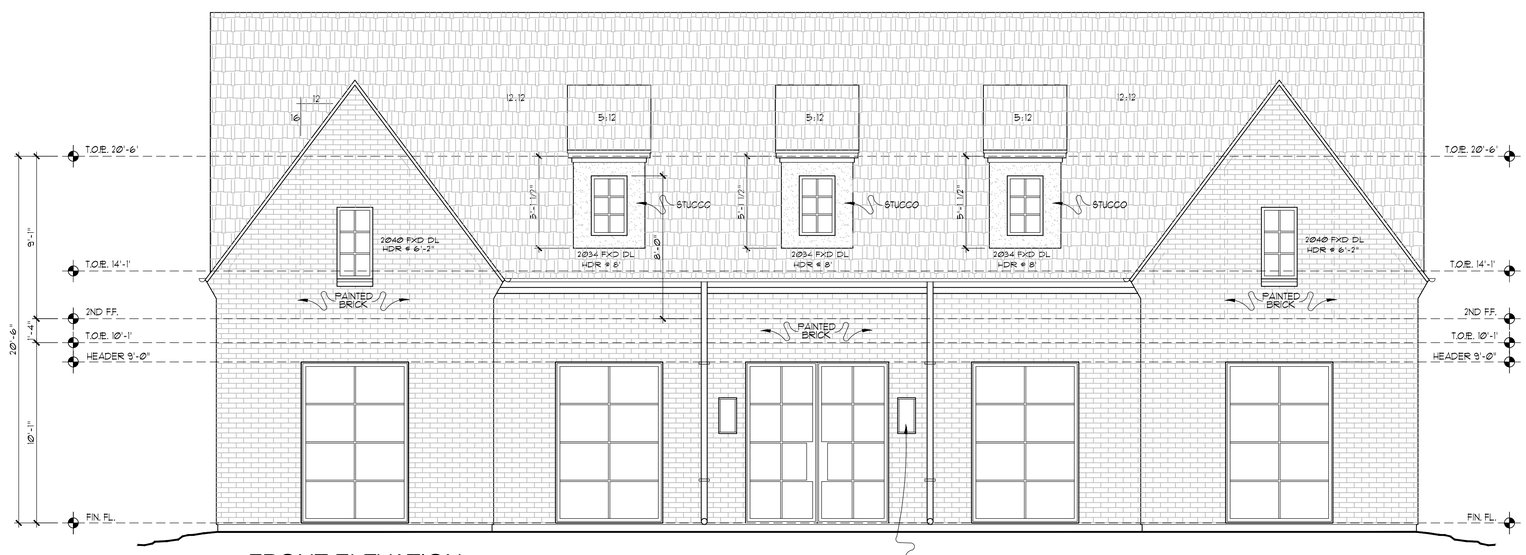

1 FRONT ELEVATION
SCALE: 1/4"=1'-0"

WDG

WATSON DESIGN GROUP
3537 W. 7TH SUITE 5
FORT WORTH, TEXAS
0.817.882.8882
WATSONDESIGNGROUP.COM

Copyright, S. Watson Design, Inc. – 2018

These plans are intended to provide the basic construction information necessary to substantially complete this structure. These plans must be verified and checked by the builder or the owner in full with all other plans, specifications, shop dwgs. and / or omission, if found, is to be brought to the immediate attention of the designer before any construction is commenced or purchases made. It is recommended that the owner or builder also complete Structural Engineering, Mechanical, Electrical, Structural, before beginning construction of any kind. Note: All Federal, State, and Local codes, ordinances, and restrictions take precedence over any part of this drawing which may conflict with same, and must be complied with and followed before and during construction. These plans, and their use are the property of Watson Design and are not to be used for construction, reused, traced, or reproduced by any means without the expressed written consent of Watson Design. All rights reserved

OLERIO HOMES
4104 DUNHAVEN RD
LOT 1, BLOCK D/6147
NORTHWAY ESTATES
CITY OF DALLAS
DALLAS COUNTY, TEXAS

PLAN NUMBER
12456618

DATE
12/12/2018

SHEET NUMBER
A4

SCALE 24X36 1/4"=1'

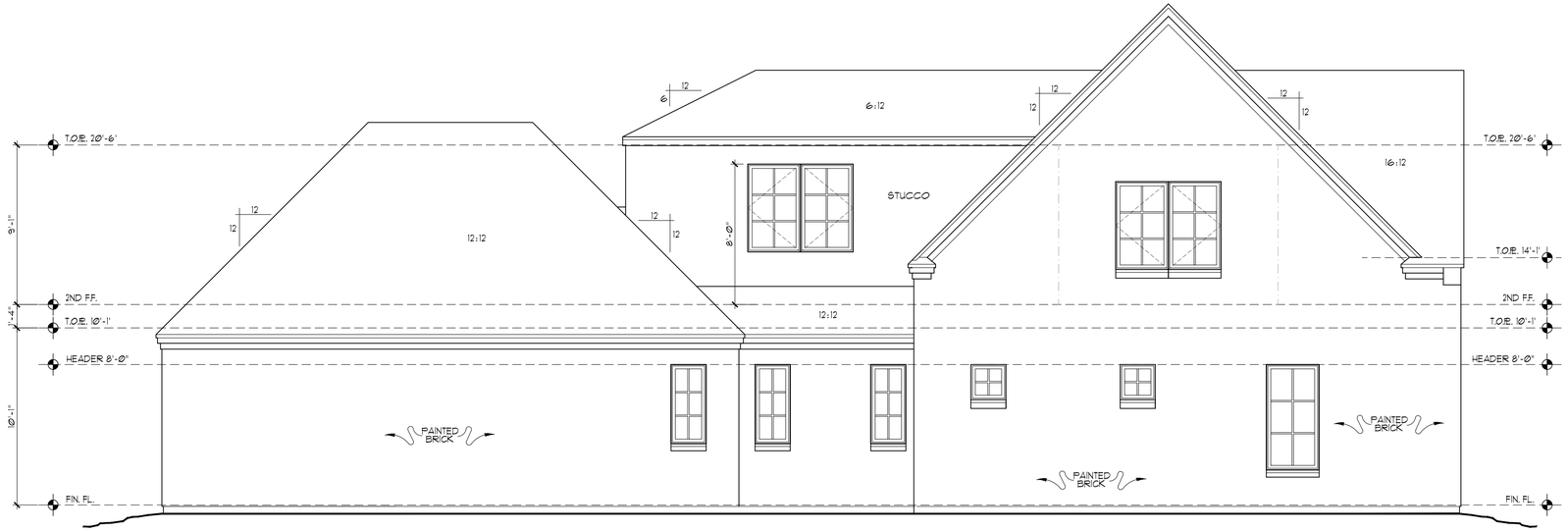

2 LEFT ELEVATION
SCALE: 1/4"=1'-0"

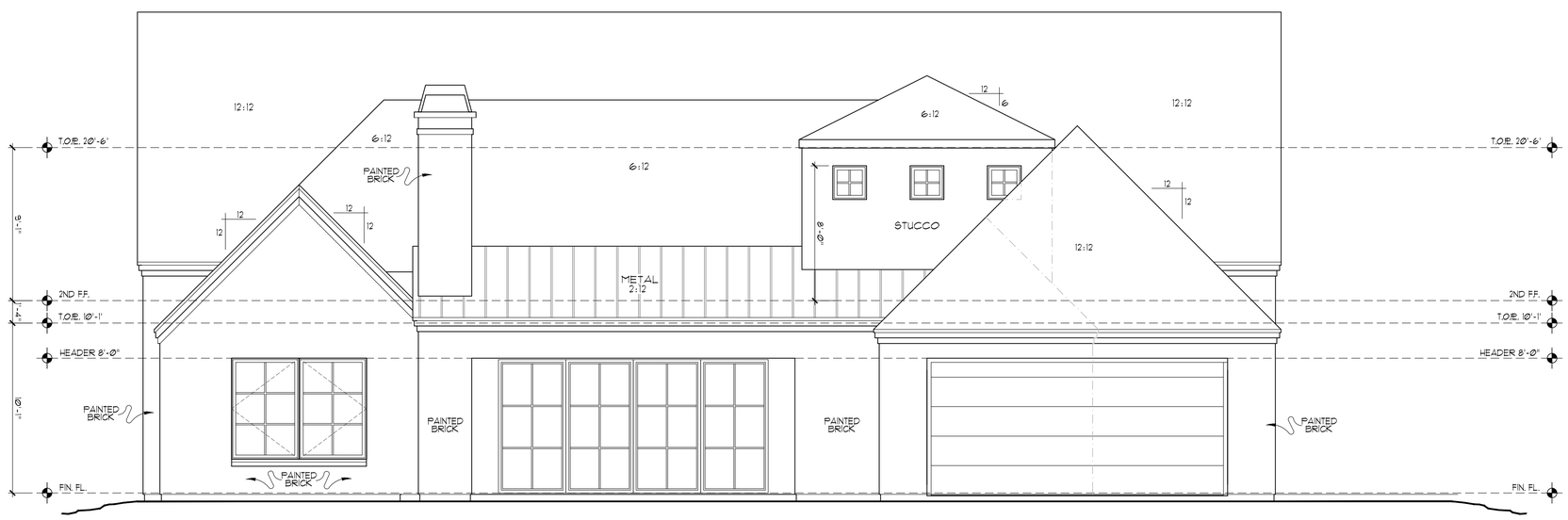

1 REAR ELEVATION
SCALE: 1/4"=1'-0"

WDG

WATSON DESIGN GROUP
3537 W. 7TH SUITE 5
FORT WORTH, TEXAS
0.817.882.8882
WATSONDESIGNGROUP.COM

Copyright, S. Watson Design, Inc. – 2018

These plans are intended to provide the basic construction information necessary to substantially complete this structure. These plans must be verified and checked by the builder or the owner in order to insure the proper fit, function, and appearance and / or omission. If found, is to be brought to the immediate attention of the designer before any construction is commenced or purchase made. It is recommended that the owner or builder also provide these plans to a structural engineer (Foundation, Floor, and Structural) before beginning construction of any kind. Note: All Federal, State, and Local codes, ordinances, and restrictions take precedence over any part of this drawing which may conflict with same and must be strictly adhered and followed before and during construction. These plans, and their use are the property of Watson Design and are not to be used for construction, reused, traced, or reproduced by any means without the expressed written consent of Watson Design. All rights reserved

OLERIO HOMES
4104 DUNHAVEN RD
LOT 1, BLOCK D/6147
NORTHWAY ESTATES
CITY OF DALLAS
DALLAS COUNTY, TEXAS

PLAN NUMBER
12456618

DATE
12/12/2018

SHEET NUMBER
A5

SCALE 24X36 1/4"=1'

NOTE:

1. VERIFY WITH WINDOW MANUFACTURER FOR TRUE ROUGH OPENING SIZES.
2. DOORS AND WINDOWS BY BUILDER/OWNER.
3. (T) TEMPERED GLASS. RE: FLOOR PLANS.

WINDOW SCHEDULE

MARK	QTY	WIDTH	HEIGHT	TYPE	WALL	DESCRIPTION	
(A)	4	6'-0"	9'-0"	FIXED	2X4	GUEST BDRM, DINING, STUDY, MSTR CLOS - DL	
(B)	1	2W-3'-0"	5'-0"	FIXED	2X4	MSTR BATH - MULLED UNIT, DL	
(C)	2	2'-6"	6'-0"	CASEMENT	2X4	MSTR SUITE - DL	EGRESS
(D)	1	2W-4'-0"	6'-0"	FIXED	2X4	MSTR SUITE - MULLED UNIT, DL	
(E)	2	3'-8"	6'-0"	FIXED	2X4	NOOK - DL	
(F)	6	2'-0"	2'-0"	FIXED	2X4	2-CAR GARAGE, PLANNING, BATH, GAMEROOM - DL	
(G)	1	2'-0"	4'-6"	FIXED	2X6	UTIL - DL	
(H)	2	2'-0"	4'-6"	FIXED	2X4	KITCHEN - DL	
(J)	1	3'-0"	6'-0"	CASEMENT	2X4	GUEST BDRM - DL	EGRESS
(K)	2	2'-0"	4'-0"	FIXED	2X4	BDRM #3 CLOS, BDRM #4 CLOS- DL	
(L)	3	2'-0"	3'-4"	FIXED	2X4	DORMERS - DL	
(M)	3	2W-3'-0"	5'-0"	CASEMENT	2X4	BDRM #4, GAMEROOM, BDRM #3 - MULLED UNIT, DL	EGRESS

DOOR SCHEDULE

MARK	QTY	WIDTH	HEIGHT	TYPE	WALL	DESCRIPTION
(1)	1	2-4'-0"	9'-0"	EXTERIOR	2X4	ENTRY DOOR - PER SELECTION
(2)	1	16'-0"	8'-0"	EXTERIOR	2X4	FAMILY ROOM - SLIDING DOOR UNIT, DL
(3)	1	2'-8"	8'-0"	EXTERIOR	2X4	TO GARAGE - SC
(4)	1	2'-8"	8'-0"	EXTERIOR	2X4	PLN'G HALL - DL

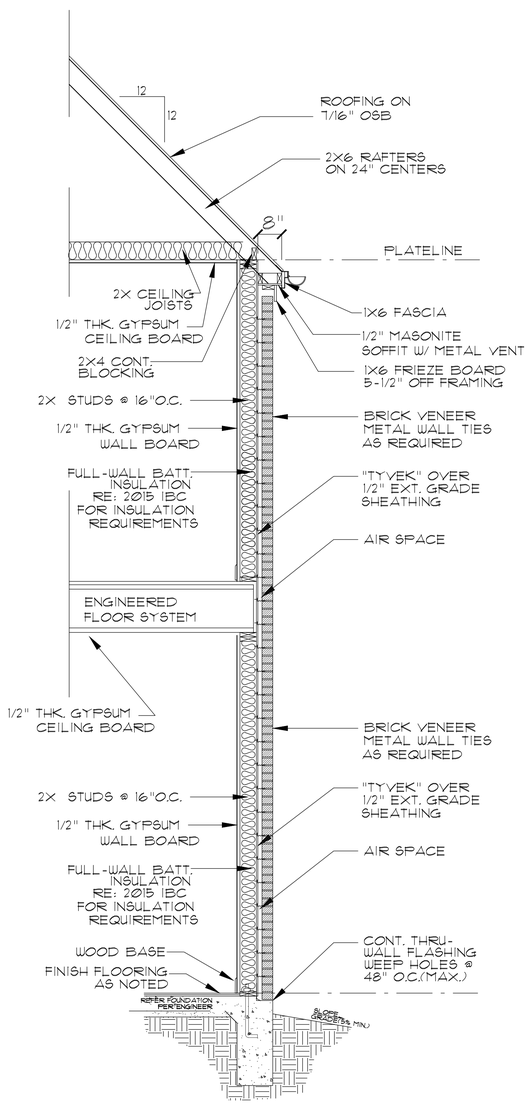

WALL DETAIL @ 12:12 PITCH - BRICK
(1) SCALE: 1/2"=1'-0"

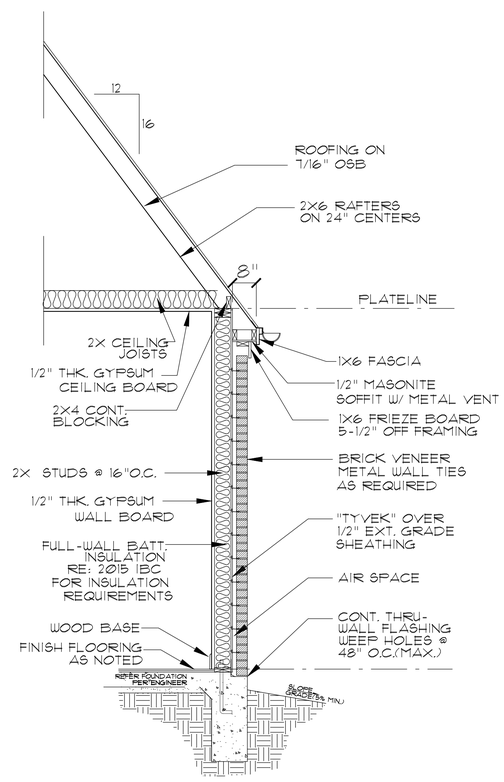

WALL DETAIL @ 16:12 PITCH - BRICK
(2) SCALE: 1/2"=1'-0"

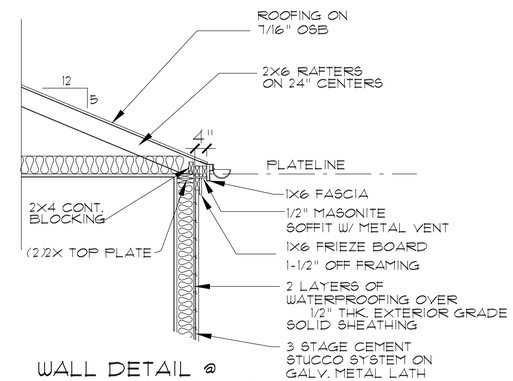

WALL DETAIL @ 5:12 PITCH - STUCCO
(3) SCALE: 1/2"=1'-0"

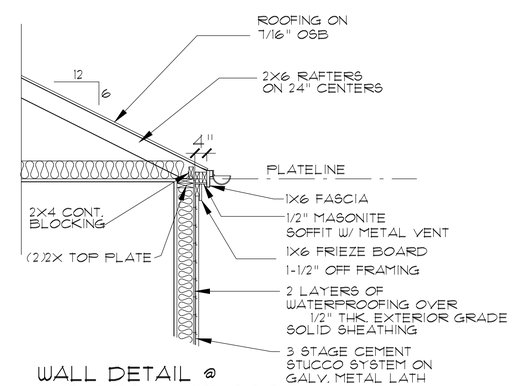

WALL DETAIL @ 6:12 PITCH - STUCCO
(4) SCALE: 1/2"=1'-0"

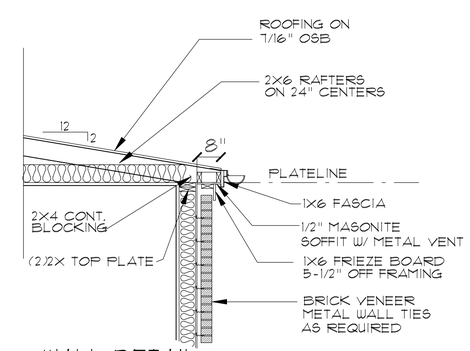

WALL DETAIL @ 2:12 PITCH - BRICK
(5) SCALE: 1/2"=1'-0"

WDG

WATSON DESIGN GROUP
3537 W. 7TH SUITE 5
FORT WORTH, TEXAS
0.817.882.8882
WATSONDESIGNGROUP.COM

Copyright, S. Watson Design, Inc. – 2018

These plans are intended to provide the basic construction information necessary to substantially complete this structure. These plans must be verified and checked by the builder or the owner in lieu of this project. Any discrepancies, errors and / or omission, if found, is to be brought to the immediate attention of the designer before any construction is commenced or purchases made. It is recommended that the owner or builder obtain complete drawings covering Plumbing, Electrical, Structural, before beginning construction of any kind. Note: All Federal, State, and Local codes, ordinances, and restrictions take precedence over any part of these plans which may conflict with same and must be strictly adhered to and followed before and during construction. These plans, and their use are the property of Watson Design and are not to be used for construction, reused, traced, or reproduced by any means without the expressed written consent of Watson Design. All rights reserved

OLERIO HOMES
4104 DUNHAVEN RD
LOT 1, BLOCK D/6147
NORTHWAY ESTATES
CITY OF DALLAS
DALLAS COUNTY, TEXAS

PLAN NUMBER
12456618

DATE
12/12/2018

SHEET NUMBER
A6

SCALE 24X36 1/4"=1'

ELECTRIC SYMBOL LEGEND

- 110V DUPLEX OUTLET @ 12" A.F.F.
- 110V DUPLEX OUTLET @ 44" A.F.F.
- 110V DUPLEX OUTLET @ WATERPROOF
- 110V DUPLEX OUTLET @ GROUND FAULT INTERRUPT
- 110V DUPLEX OUTLET @ FLOOR PLUG
- 110V DUPLEX OUTLET @ CEILING MOUNT
- 220V THREE PRONG OUTLET

- SINGLE POLE SWITCH
- THREE POLE SWITCH
- SINGLE POLE SWITCH W/ DIMMER FEATURE

- RECESSED INCANDESCENT
- RECESSED INCANDESCENT - EYEBALL SPOT
- RECESSED INCANDESCENT - LOW VOLTAGE
- RECESSED INCANDESCENT - WATERPROOF
- RECESSED INCANDESCENT - HEAT LAMP
- EXHAUST FAN THRU ROOF
- WALL MOUNT INCANDESCENT
- SURFACE MOUNT INCANDESCENT
- PENDANT FIXTURE
- SURFACE MOUNT 2 TUBE (4'-0") FLUORESCENT
- SURFACE MOUNT CEILING FAN (L=LIGHT KIT)
- SMOKE DETECTOR - HARDWIRE (LOCATE PER CODES)
- SURFACE MOUNT TRACK LIGHT
- UNDER CABINET SURFACE MOUNT FLUORESCENT
- WALL MOUNT FLOOD (WATERPROOF, SHIELDED)
- TELEVISION (CABLE) CONNECTION
- TELEPHONE OUTLET
- GAS CONNECTION

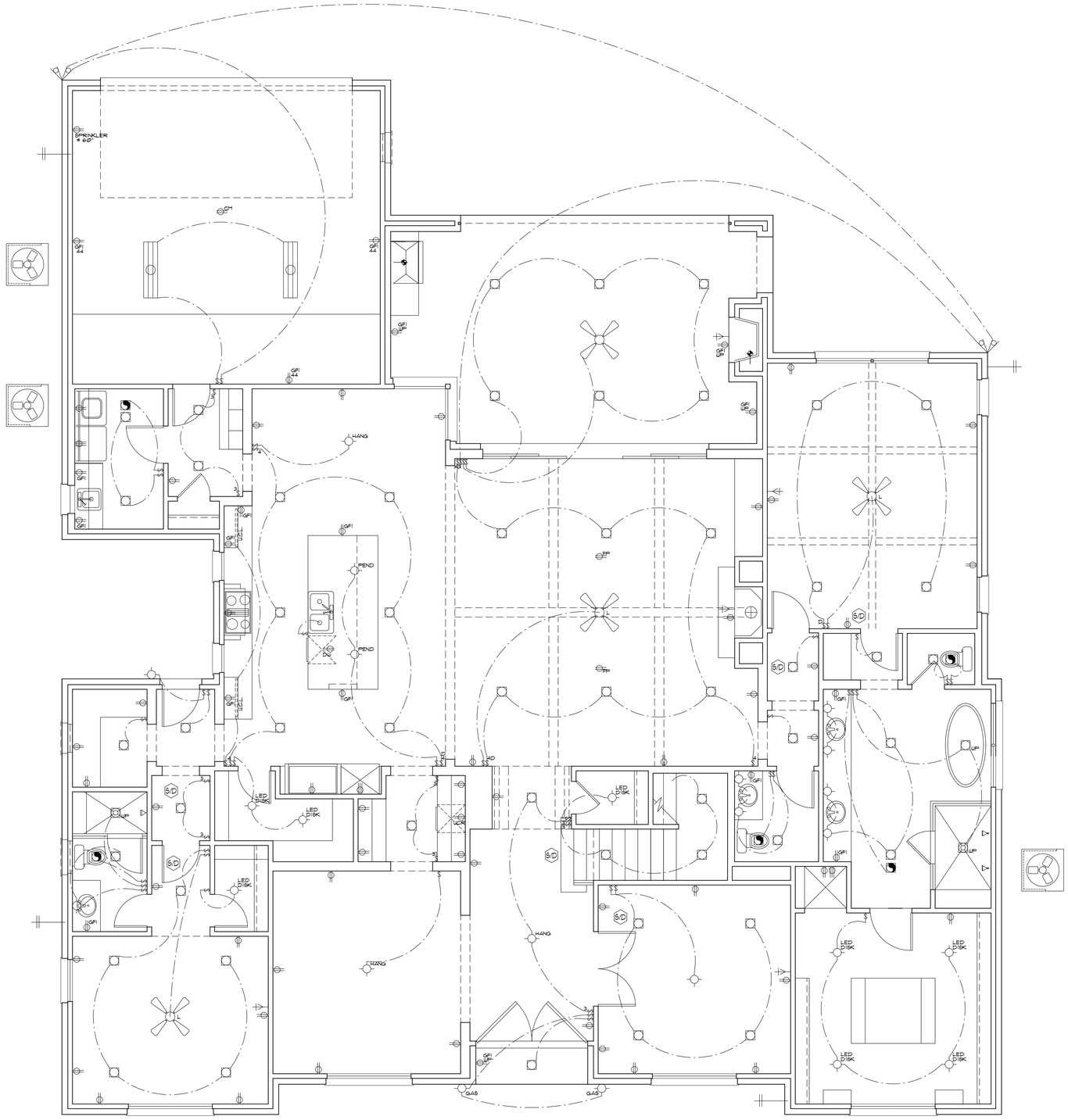

1 GROUND FLOOR ELECTRICAL PLAN
SCALE: 1/4"=1'-0"

WDG
WATSON DESIGN GROUP
3537 W. 7TH SUITE 5
FORT WORTH, TEXAS
0.817.882.8882
WATSONDESIGNGROUP.COM

Copyright, S. Watson Design, Inc. – 2018

These plans are intended to provide the basic construction information necessary to substantially complete this structure. These plans must be verified and checked by the builder or contractor in order to insure that all details are accurate and/ or omission, if found, is to be brought to the immediate attention of the designer before any construction is commenced or purchase made. It is recommended that these plans be used in conjunction with a complete Engineering package including Structural, before beginning construction of any kind. Note: All Federal, State, and Local codes, ordinances, and restrictions take precedence over any part of these plans which may conflict or violate same and shall be strictly adhered and followed before and during construction. These plans, and their use are the property of Watson Design and are not to be used for construction, reused, traced, or reproduced by any means without the expressed written consent of Watson Design. All rights reserved

OLERIO HOMES
4104 DUNHAVEN RD
LOT 1, BLOCK D/6147
NORTHWAY ESTATES
CITY OF DALLAS
DALLAS COUNTY, TEXAS

PLAN NUMBER
12456618

DATE
12/12/2018

SHEET NUMBER
A7

SCALE 24X36 1/4"=1'

ELECTRIC SYMBOL LEGEND

- 110V DUPLEX OUTLET @ 12" A.F.F.
- 110V DUPLEX OUTLET @ 44" A.F.F.
- 110V DUPLEX OUTLET @ WATERPROOF
- 110V DUPLEX OUTLET @ GROUND FAULT INTERRUPT
- 110V DUPLEX OUTLET @ FLOOR PLUG
- 110V DUPLEX OUTLET @ CEILING MOUNT
- 220V THREE PRONG OUTLET

- SINGLE POLE SWITCH
- THREE POLE SWITCH
- SINGLE POLE SWITCH W/ DIMMER FEATURE

- RECESSED INCANDESCENT
- RECESSED INCANDESCENT - EYEBALL SPOT
- RECESSED INCANDESCENT - LOW VOLTAGE
- RECESSED INCANDESCENT - WATERPROOF
- RECESSED INCANDESCENT - HEAT LAMP
- EXHAUST FAN THRU ROOF
- WALL MOUNT INCANDESCENT
- SURFACE MOUNT INCANDESCENT
- PENDANT FIXTURE
- SURFACE MOUNT 2 TUBE (4'-0") FLUORESCENT
- SURFACE MOUNT CEILING FAN (L=LIGHT KIT)
- SMOKE DETECTOR - HARDWIRE (LOCATE PER CODES)
- SURFACE MOUNT TRACK LIGHT
- UNDER CABINET SURFACE MOUNT FLUORESCENT
- WALL MOUNT FLOOD (WATERPROOF, SHIELDED)
- TELEVISION (CABLE) CONNECTION
- TELEPHONE OUTLET
- GAS CONNECTION

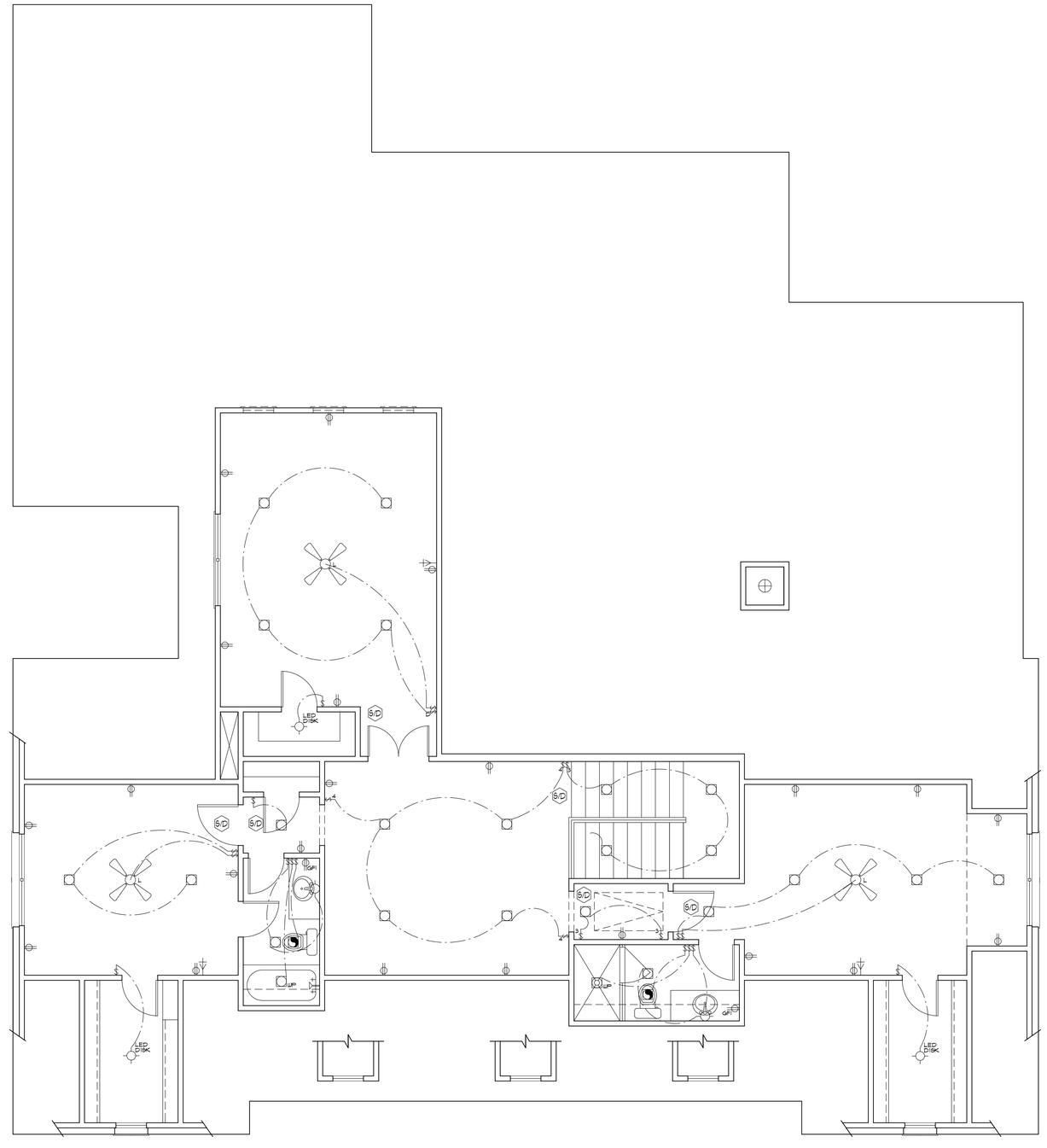

1 SECOND FLOOR ELECTRICAL PLAN
SCALE: 1/4"=1'-0"

WDG
WATSON DESIGN GROUP
3537 W. 7TH SUITE 5
FORT WORTH, TEXAS
0.817.882.8882
WATSONDESIGNGROUP.COM

Copyright, S. Watson Design, Inc. – 2018

These plans are intended to provide the basic construction information necessary to substantially complete this structure. These plans must be verified and checked by the builder/ contractor in order to insure the proper fit of this project. Any discrepancy, error and / or omission, if found, is to be brought to the immediate attention of the designer before any construction is commenced or purchase made. It is recommended that the owner or builder obtain complete drawings prepared by a qualified Mechanical, Structural, before beginning construction of any kind. Note: All Federal, State, and Local codes, ordinances, and restrictions take precedence over any part of these plans which may conflict with same and must be strictly adhered and followed before and during construction. These plans, and their use are the property of Watson Design and are not to be used for construction, reused, traced, or reproduced by any means without the expressed written consent of Watson Design. All rights reserved

OLERIO HOMES
4104 DUNHAVEN RD
LOT 1, BLOCK D/6147
NORTHWAY ESTATES
CITY OF DALLAS
DALLAS COUNTY, TEXAS

PLAN NUMBER
12456618

DATE
12/12/2018

SHEET NUMBER
A8

SCALE 24X36 1/4"=1'