DRAWING NO. SC210991

REV	DATE	DESCRIPTION	ECO	BY	C'H'K.
B	12/13/2012 00:00:00 AM	TORQUE INFROMATION ADDED	29767	RG	MA

CATALOG NO.	WIRE RANGE (AWG/kcmil)	L	W	H	HEX KEY	N	TORQUE IN/LB
BIT04	#14-#4	1.08 [27]	1.50 [38]	1.25 [32]	1/8	2	45
BIT02/0	#14-2/0	1.52 [39]	1.56 [40]	1.38 [35]	3/16	2	120
BIT0250	#10-250	2.03 [52]	2.64 [67]	2.13 [54]	5/16	2	275
BIT0350	#10-350	2.22 [56]	3.00 [76]	2.50 [64]	5/16	2	
BIT0600	#4-600	2.72 [69]	3.00 [76]	2.75 [70]	3/8	2	375
6 BIT0750	#2-750	2.87 [73]	3.38 [86]	3.00 [76]	3/8	2	

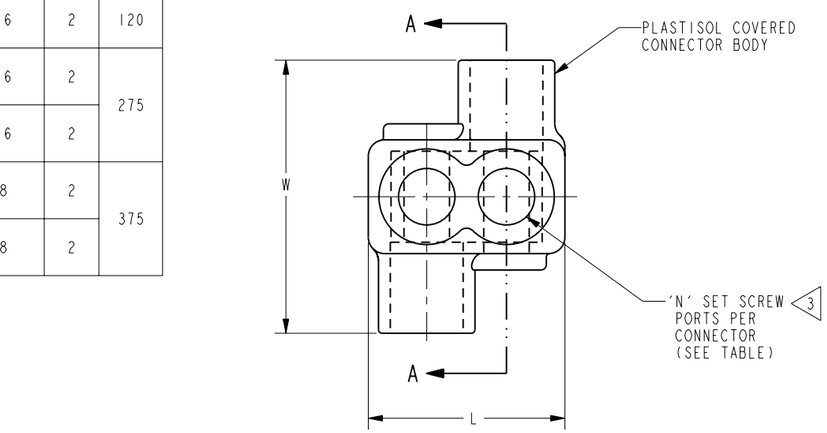

LISTED

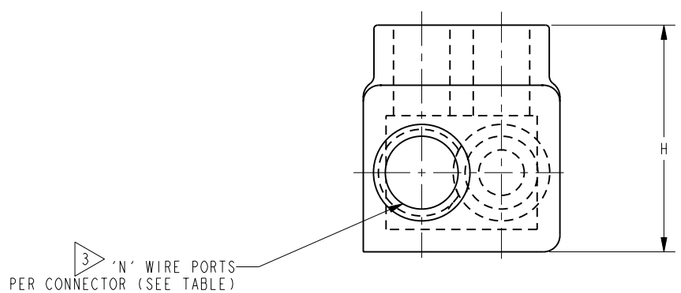

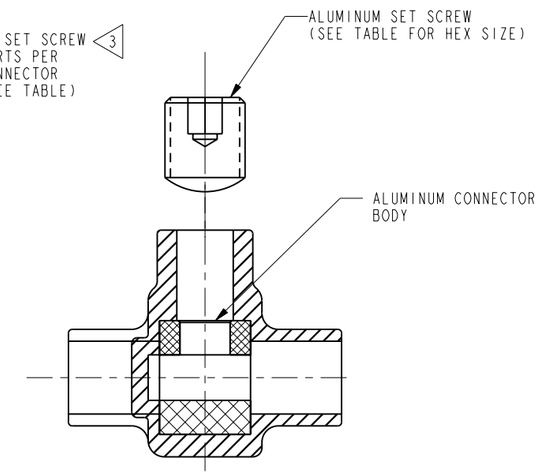

SECTION A-A

FEATURES	BENEFITS
PLASTISOL COVERED AL6061-T6 BODY	SAVES TIME, LOWERS INSTALLATION COSTS, ELIMINATES TAPING.
CLEAR PLASTISOL	ALLOWS VISUAL CONFIRMATION THAT CONDUCTOR IS PROPERLY INSERTED.
OXIDE-INHIBITOR IS PRE-INSTALLED	INHIBITS MOISTURE AND CONTAMINATS FROM ENTERING THE CONTACT AREA
RANGE-TAKING	REDUCES THE NUMBER OF CONNECTORS CARRIED IN INVENTORY

CATALOG NUMBER CONFIGURATION

BIT0 2/0

BURNDY INSULATED TAP OFFSET PORTS

MAX. WIRE SIZE ACCOMMODATED (AL/CU), STR.

NOTES:

1. THIS DRAWING TO BE INTERPRETED PER ASME Y14.5M-1994.
2. CONNECTORS ARE SUPPLIED INDIVIDUALLY LABELED. LABEL INFORMATION INCLUDES CATALOG NUMBER, QUANTITY, AND BARCODE.
3. END CAPS INSTALLED ON WIRE PORTS AND SET SCREW PORTS.
4. ALL CONNECTORS UL LISTED, CSA CERTIFIED FOR AL9CU, 90°C APPLICATIONS.
5. DIMENSIONS IN BRACKETS [ ] ARE IN MILLIMETERS ROUNDED OFF TO THE NEAREST MILLIMETER, UNLESS OTHERWISE NOTED,AND ARE FOR REFERENCE ONLY.
6. NOT UL LISTED.

TO ORDER BURNDY® PRODUCTS CALL

UNITED STATES:
1-800-346-4175 (LONDONDERRY, NH)

CANADA:
1-800-361-6975 (QUEBEC)
1-800-387-6487 (ALL OTHER PROVINCES)

FOR PRODUCT INFO: http://www.burndy.com

UNITAP™- PLASTISOL COVERED WIRE CONNECTORS

ITEM NO: N/A

CAT. NO: BITO- , SERIES

DRAWN BY:	J AYER	3/21/97
CHECKER:	C CHADBOURNE	7/21/97
DSN APPVL:	C CHADBOURNE	7/21/97
MFG APPVL:	--	--
QA APPVL:	J BRODEUR	7/28/97
MKT APPVL:	P WERTHMAN	7/24/97
PROD FAM:	--	
PROJECT #:	--	
DOCUMENT TYPE:	Sales	
REL LEVEL:	Released	

BURNDY

SCALE: NTS

SIZE: C

DRAWING NO: SC210991

REV: B

SHEET 2 OF 15

REV: PE0200