M-10393 | 1

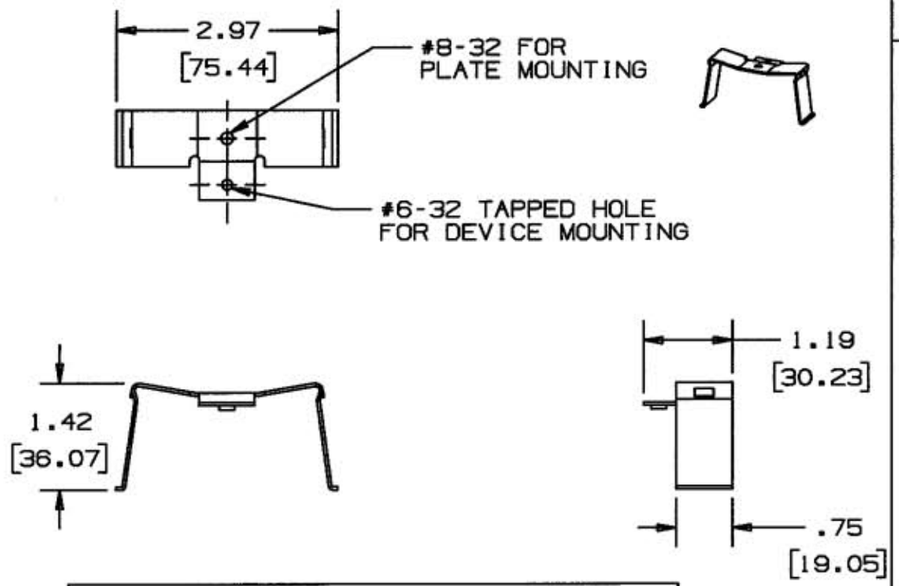

COVER BRACKET
CAT. NO. HBL3046BEIV & HBL3046BEGY

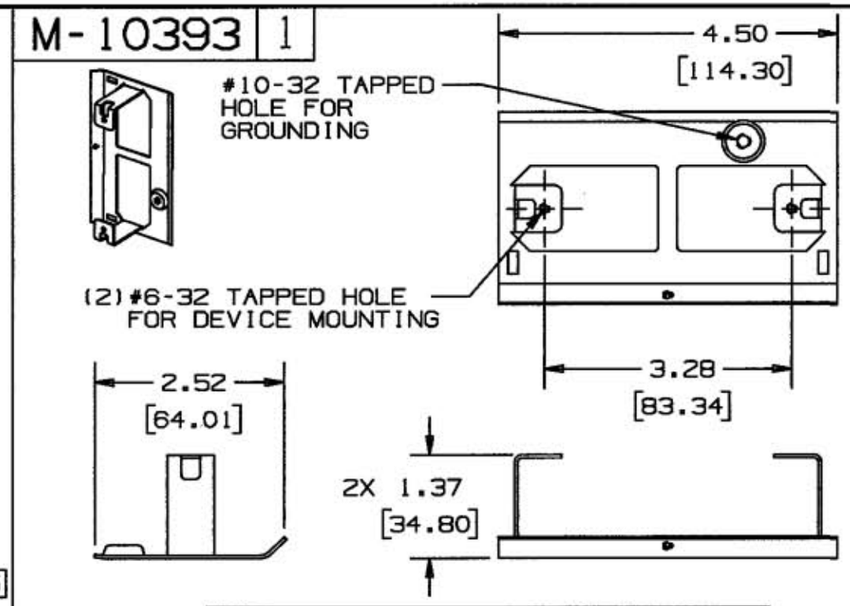

DEVICE BRACKET
CAT. NO. HBL3007CGY

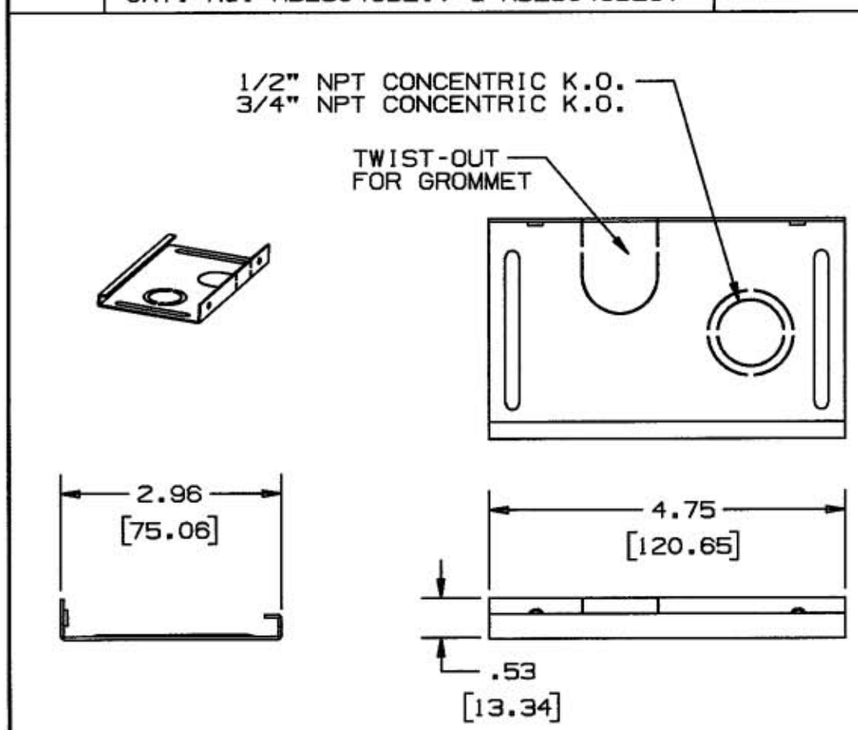

COVER, TAP OFF FITTING

CAT. NO.	COLOR
HBL3046H2IV	IVORY
HBL3046H2GY	GRAY

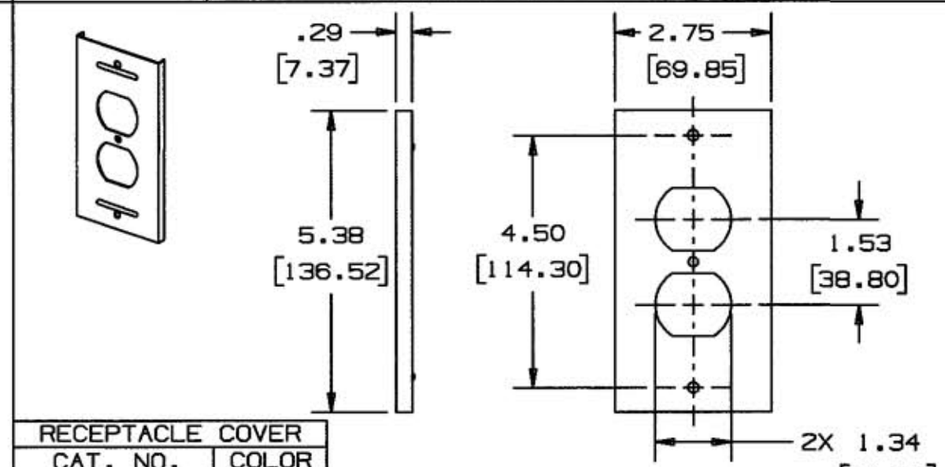

RECEPTACLE COVER

CAT. NO.	COLOR
HBL3046BEIV	IVORY
HBL3046BEGY	GRAY

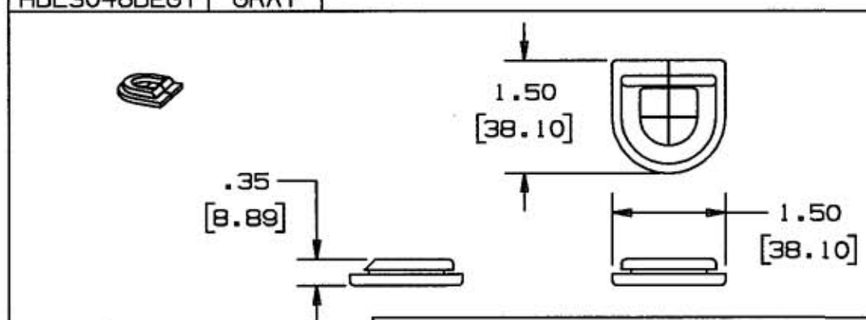

GROMMET
CAT. NO. HBL3046H2IV & HBL3046H2GY

NOTE: ALL DIMENSIONS IN INCHES AND [MM]

CODE 74545

LIST OF PARTS

DESCRIPTION	MATERIAL	FINISH
COVER BRACKET	STEEL	GALVANIZED
DEVICE BRACKET	STEEL	GALVANIZED
COVER, TAP OFF FITTING	STEEL	PAINTED
GROMMET	RUBBER	BLACK
RECEPTACLE COVER	STEEL	PAINTED

SYM	REVISIONS	APP	DATE
1	RELEASED PER DCN 13553		11/14/06

THE DESIGN AND DIMENSIONS OF THE PRODUCT SHOWN ON THIS DRAWING ARE SUBJECT TO CHANGE WITHOUT NOTICE

TITLE
MISC. PARTS
HBL3000 SERIES

TOLERANCES UNLESS OTHERWISE SPECIFIED
FRACTIONS ± 1/64
DECIMALS ± .005
ANGLES ± 2°

WIRING DEVICE-KELLEMS
HUBBELL INCORPORATED
BRIDGEPORT, CT

DR. BY SRE	APP. BY
TR. BY	SCALE 1:1
CHK'D BY	DATE 11/14/06

DIMENSION SHEET FOR CAT. NO.

REPAIRABLE ☐ NON-REPAIRABLE ☒

B

M-10393

1