M-8243 1

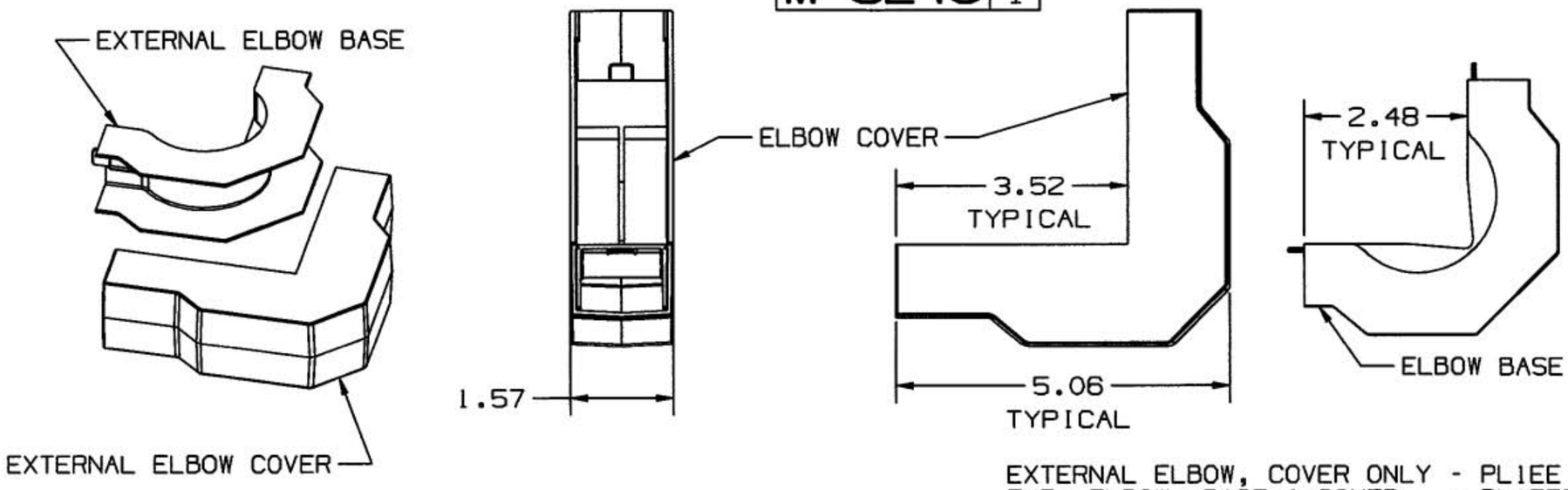

EXTERNAL ELBOW, COVER ONLY - PL1EE
EXT. ELBOW, BASE & COVER - PL1EEBC

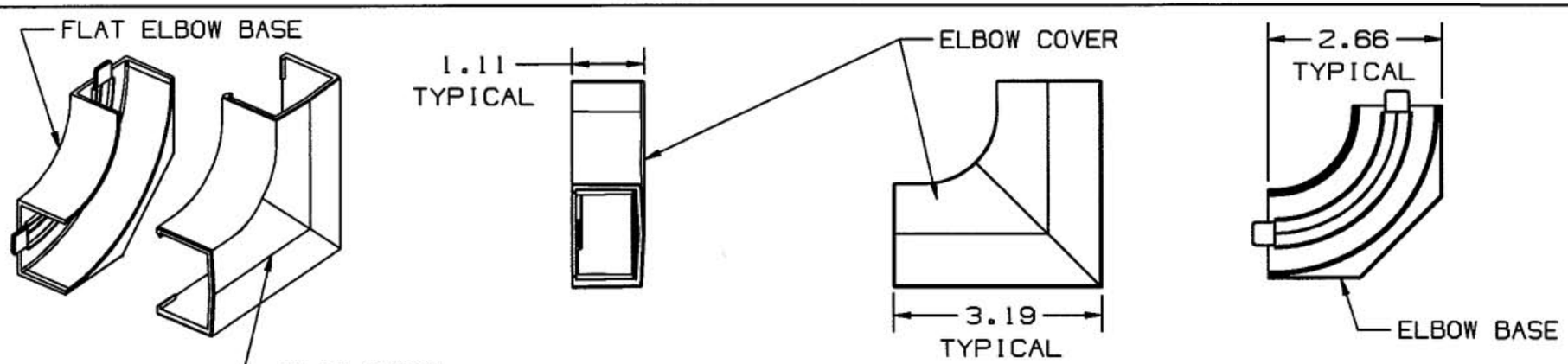

FLAT ELBOW, COVER ONLY - PL1FE
FLAT ELBOW, BASE & COVER - PL1FEBC

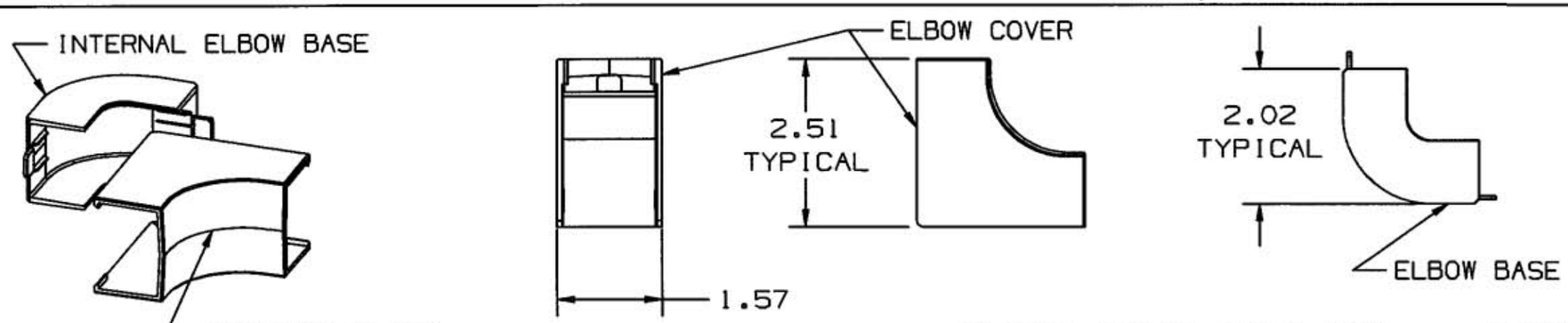

INTERNAL ELBOW, COVER ONLY - PL1IE
INTERNAL ELBOW, BASE & COVER - PL1IEBC

CODE 74545

LIST OF PARTS

DESCRIPTION	MATERIAL	FINISH
EXTERNAL ELBOW BASE	PVC	OFFICE WHITE
EXTERNAL ELBOW COVER	PVC	OFFICE WHITE
FLAT ELBOW BASE	PVC	OFFICE WHITE
FLAT ELBOW COVER	PVC	OFFICE WHITE
INTERNAL ELBOW BASE	PVC	OFFICE WHITE
INTERNAL ELBOW COVER	PVC	OFFICE WHITE

SYM	REVISIONS	APP	DATE
1	RELEASED PER DCN 7981	SRE	9/1/00

THE DESIGN AND DIMENSIONS OF THE PRODUCT SHOWN ON THIS DRAWING ARE SUBJECT TO CHANGE WITHOUT NOTICE

TITLE
ELBOWS
PL1 LANTRAK

TOLERANCES UNLESS OTHERWISE SPECIFIED
FRACTIONS ±1/64
DECIMALS ±.005
ANGLES ±2°

WIRING DEVICE-KELLEMS
HUBBELL INCORPORATED
BRIDGEPORT, CT

DR. BY SRE	APP. BY SRE
TR. BY	SCALE ---
CHK'D BY SRE	DATE 2/23/00

DIMENSION SHEET FOR CAT. NO.

REPAIRABLE ☐ NON-REPAIRABLE ☒

B

M-8243

1