M-12042 | 3

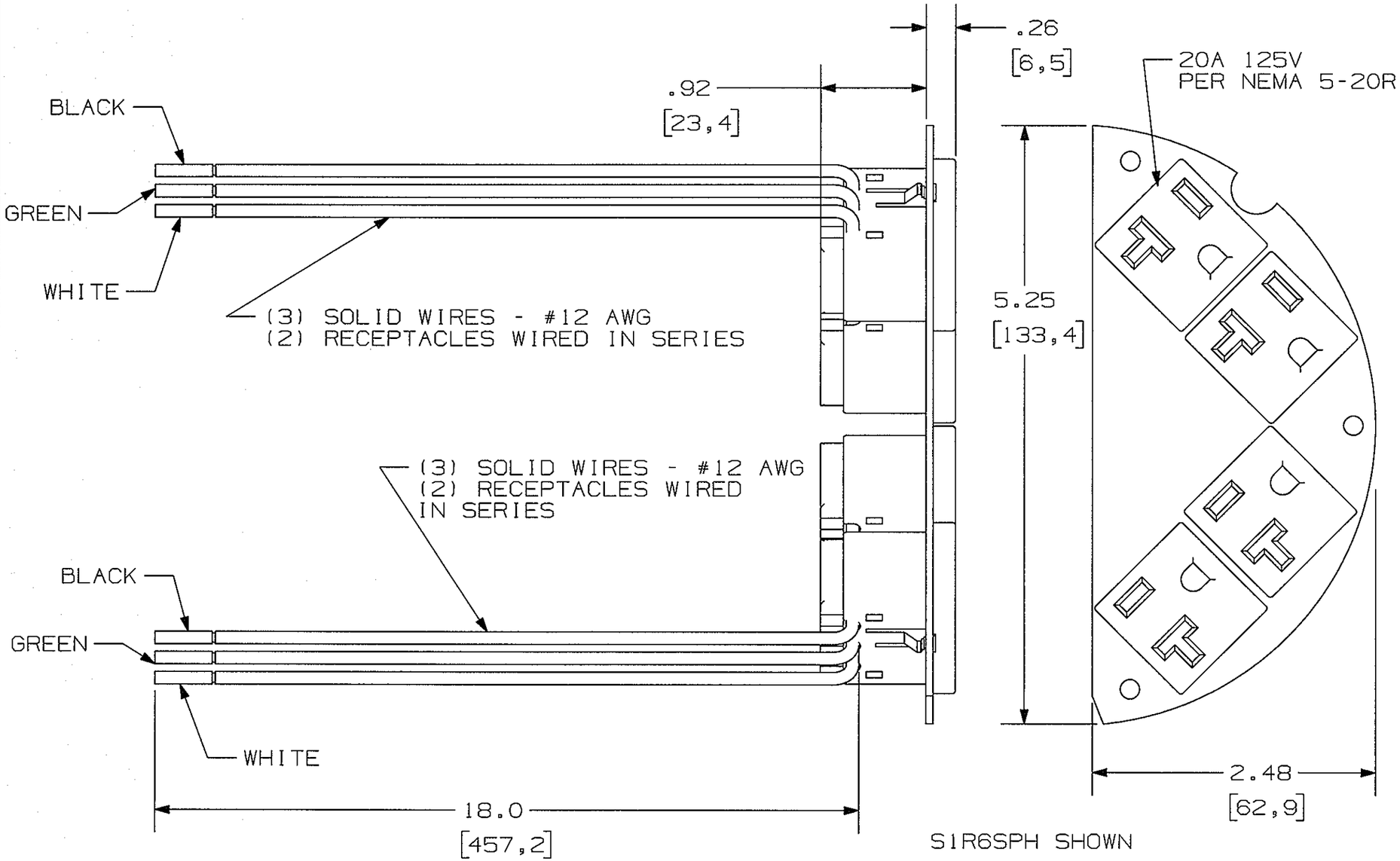

CATALOG NUMBER	RECEPTACLE MARKING
S1R6SPH	-
S1R6SPHC4	(4) CONTROLLED
S1R6SPHC2	(2) CONTROLLED

NOTES:
1) ALL DIMENSIONS ARE IN INCHES AND [MILLIMETERS]

CODE 74545

LIST OF PARTS

DESCRIPTION	MATERIAL	FINISH
COVER PLATE	STEEL	WHITE
RECEPTACLES	-----	BLACK
SOLID WIRES	COPPER	SEE DWG.
MOUNTING SCREWS	STEEL	WHITE

SYM	REVISIONS	APP	DATE
3	ADDED TABLE, ADDED BASE CATALOG NUMBER AS SHOWN PER DCN 21884. MYA	DJP	4/13/12
2	ROTATED LOWER RECEPTS 180° LOWER WIRES - WHT WAS BLK, BLK WAS WHT DCN18755	SM	4/13/12
1	RELEASED PER DCN18435		1/4/12

THE DESIGN AND DIMENSIONS OF THE PRODUCT SHOWN ON THIS DRAWING ARE SUBJECT TO CHANGE WITHOUT NOTICE

TITLE POWER PLATE, RIGHT, 50%, 6 INCH FRPT

TOLERANCES UNLESS OTHERWISE SPECIFIED
.XX = ±.01
.XXX = ±.005
ANGLES = ±2°

WIRING DEVICE-KELLEMS
HUBBELL INCORPORATED
SHELTON, CT

DR. BY SRE	APP. BY SM
TR. BY	SCALE 1:1
CHK. BY SM	DATE 1/4/12

DIMENSION SHEET FOR CAT. NO. SEE TABLE

REPAIRABLE ☐ NON-REPAIRABLE ☒

B

M-12042

3