DIMENSIONS IN INCHES [MM]

M-9518 2

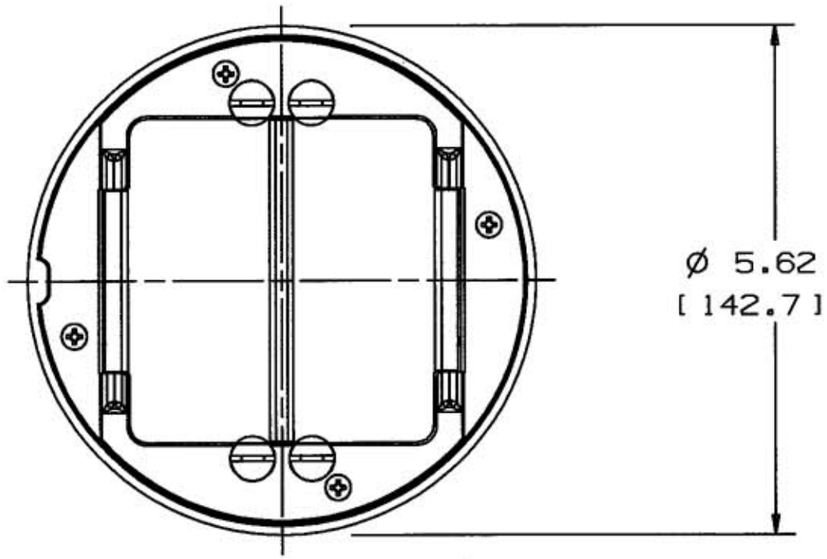

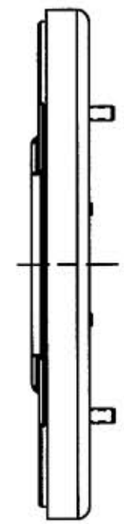

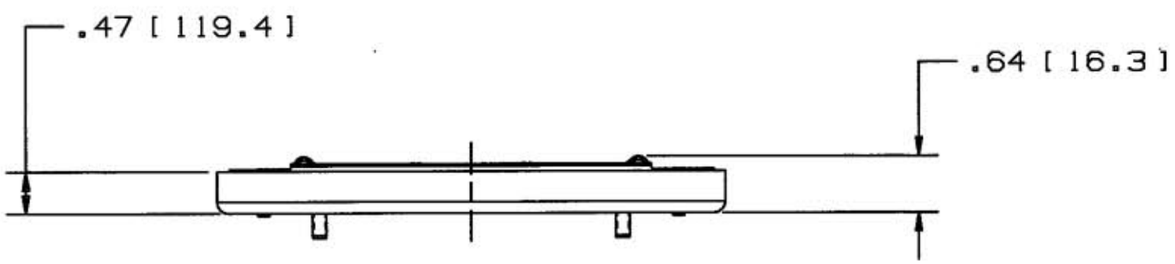

CATALOG NO	DESCRIPTION
S1TFCBRS	BRASS FINISH POWDER COAT TILE COVER
S1TFCAL	ALUMINUM FINISH POWDER COAT TILE COVER
S1TFCBK	BLACK POWDER COAT TILE COVER
S1TFCGY	GRAY POWDER COAT TILE COVER
S1TFCI	IVORY POWDER COAT TILE COVER

CODE 74545

LIST OF PARTS

DESCRIPTION	MATERIAL	FINISH
FLANGED RING, TILE	CAST ALUM.	SEE TABLE
(4) SCREW FLANGE MTG.	STEEL	ZINC PLT.
UNIV. COVER ASM.	CAST ALUM.	BLACK
(4) SCREW COVER PLT. MTG.	STEEL	SEE TABLE

SYM	REVISIONS	APP	DATE
2	DELETED GASKET, FLANGE INT. FROM LIST OF PARTS, ADDED POWDER COAT TO DESCRIPTIONS IN TABLE, REVISED TITLE BLOCK FOR SYSTEM ONE. PER DCN12261 TLS	TLS	3-8-05
1	DCN11999 INITIAL RELEASE	TLS	11-8-04

THE DESIGN AND DIMENSIONS OF THE PRODUCT SHOWN ON THIS DRAWING ARE SUBJECT TO CHANGE WITHOUT NOTICE

TITLE SYSTEM ONE
TILE FLANGE/COVER
ROUND FLOOR BOX

TOLERANCES UNLESS OTHERWISE SPECIFIED
FRACTIONS ±1/64
DECIMALS ±.005
ANGLES ±2°

WIRING DEVICE-KELLEMS
HUBBELL INCORPORATED
BRIDGEPORT, CT

DR. BY PAC | APP. BY TLS
TR. BY | SCALE NONE
CHK'D BY TLS | DATE 9-21-04

DIMENSION SHEET FOR CAT. NO. SEE TABLE

REPAIRABLE ☐ NON-REPAIRABLE ☐

B

M-9518

2