THIS COPY IS PROVIDED ON A RESTRICTED BASIS AND IS NOT TO BE USED IN ANY WAY DETRIMENTAL TO THE INTERESTS OF PANDUIT CORP.

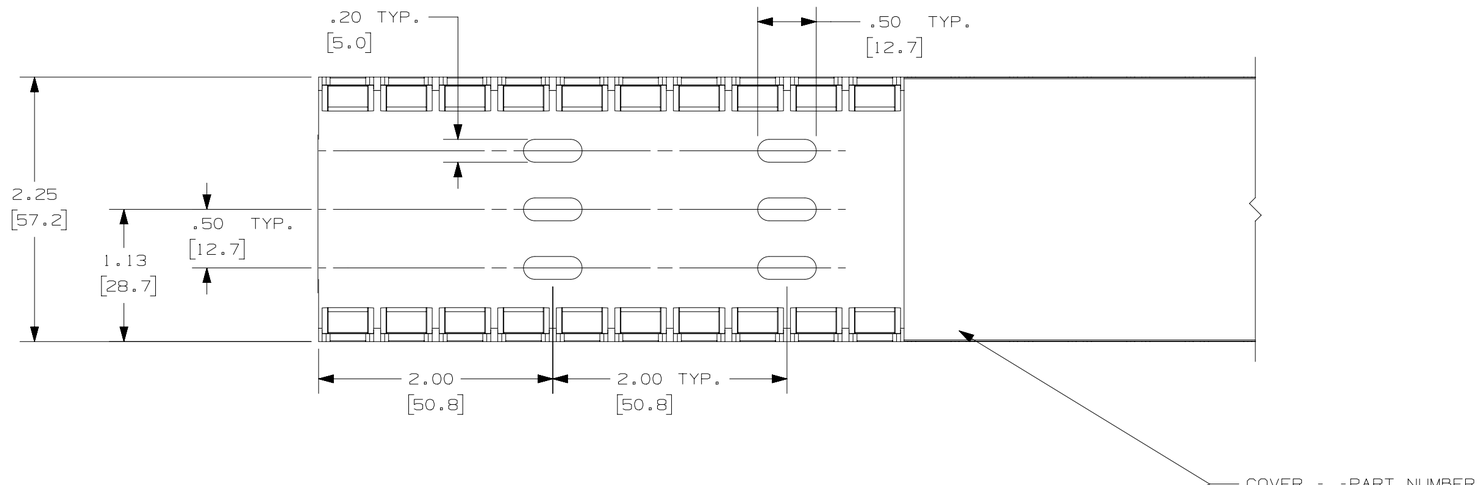

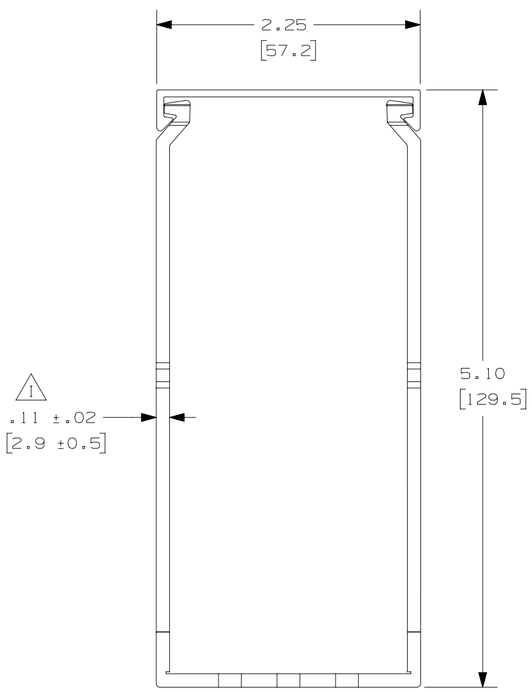

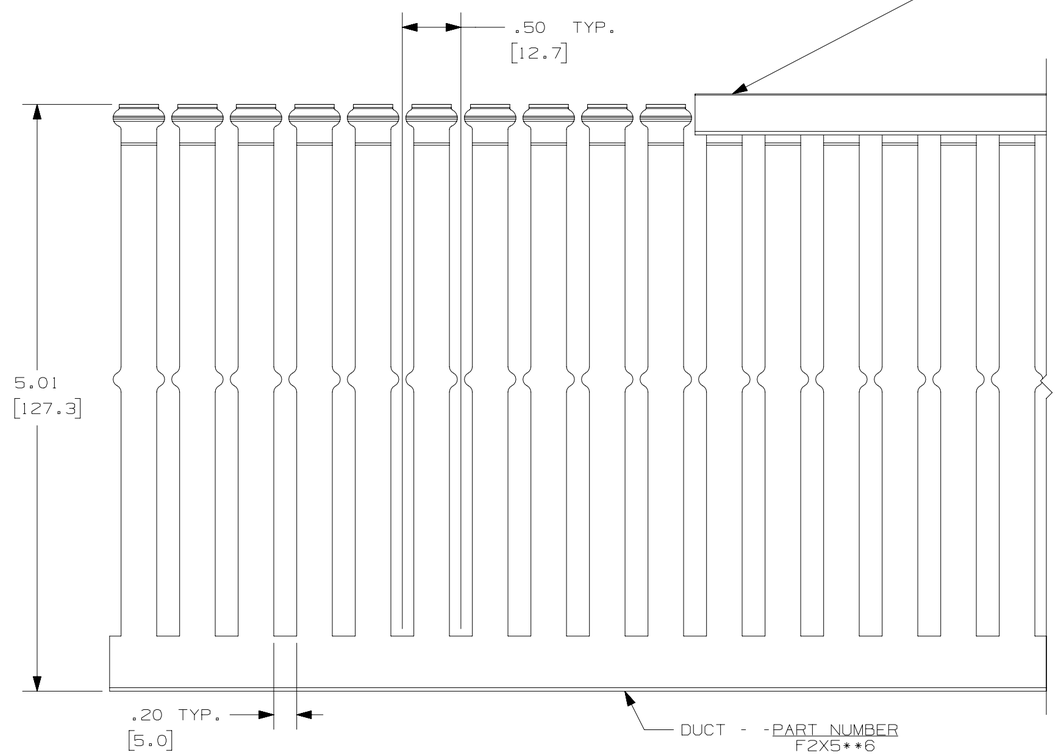

NOTES:

1. ALL DIMENSIONS ARE REFERENCE ONLY.
2. DIMENSIONS IN PARENTHESIS ARE METRIC.
3. THE ** DENOTE COLOR.
4. DUCT AND COVER ARE AVAILABLE IN 6 FT [1828.8] LENGTHS.

REV	DATE	BY	CHK	APR	DESCRIPTION	ECN
4	03.03.16	BDK	MRJS	RGRO	I. ADDED TOLERANCE	36897-775
3	02-27-13	JBN	RTFI	RTFI	H. UPDATED DRAWING BORDER & TITLE BLOCK	36897-775

TITLE
WIRING DUCT - TYPE F WITH COVER
2 X 5
MARKETING DRAWING

ITEM REVISION NAME: D11000CM/00

DATASET FILE NAME: D11000CM_DC/00E

UNLESS OTHERWISE SPECIFIED, DIMENSIONAL TOLERANCES ARE: IN [mm]
.X ± .XXX ±
.XX ± ANGLES ±
THIRD ANGLE PROJECTION

MATERIAL: PVC

DRAWING NUMBER: 36897-775

DRAWN BY	DATE	CHK	SCALE		SIZE
JHNU	06-23-03	JGG	FULL	SHT 1 OF 1	C