THIS COPY IS PROVIDED ON A RESTRICTED BASIS AND IS NOT TO BE USED IN ANY WAY DETRIMENTAL TO THE INTERESTS OF PANDUIT CORP.

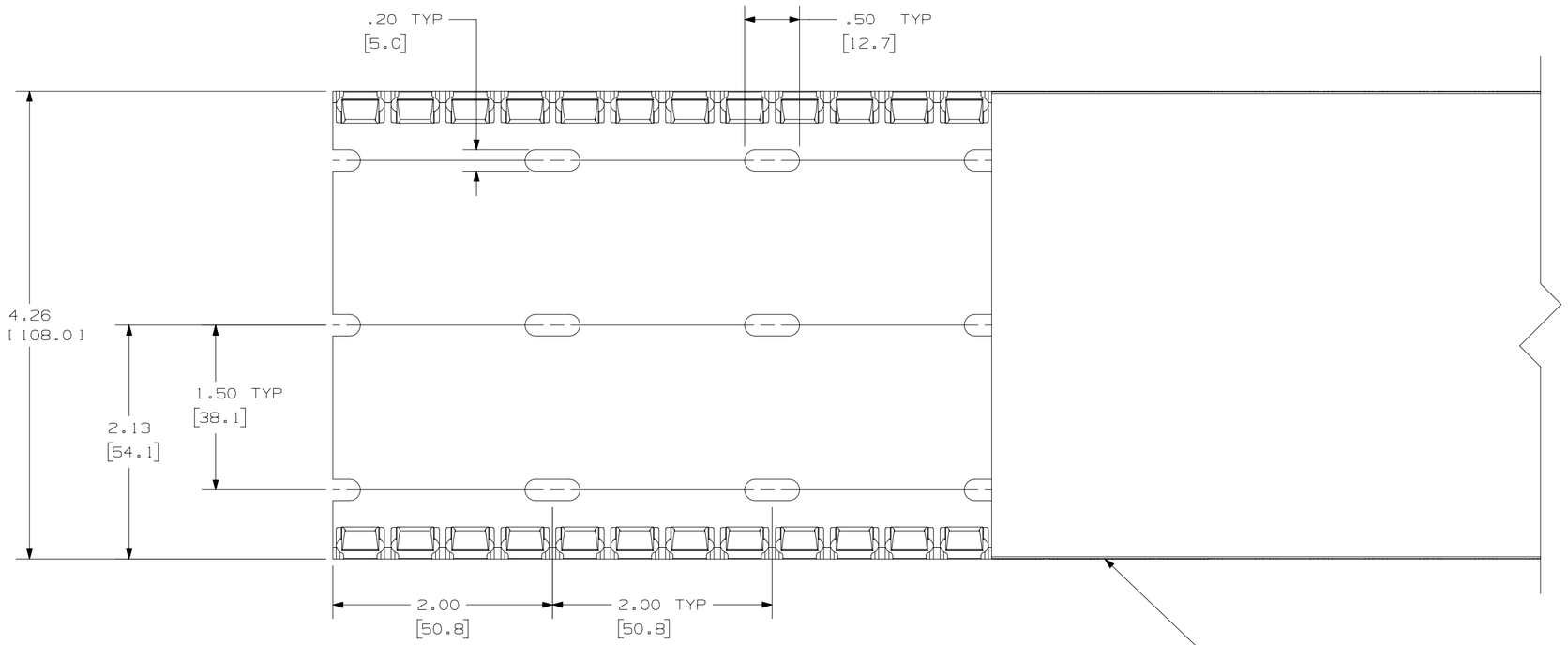

COVER -- PART NUMBER C4**6

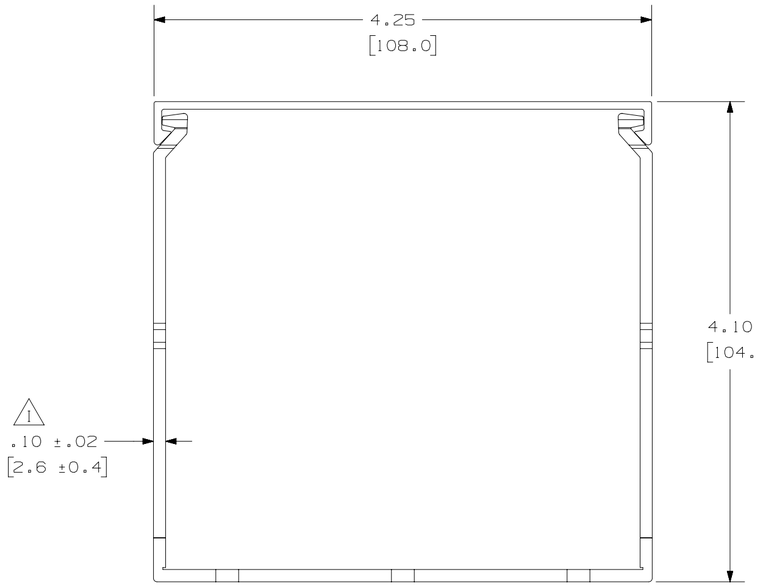

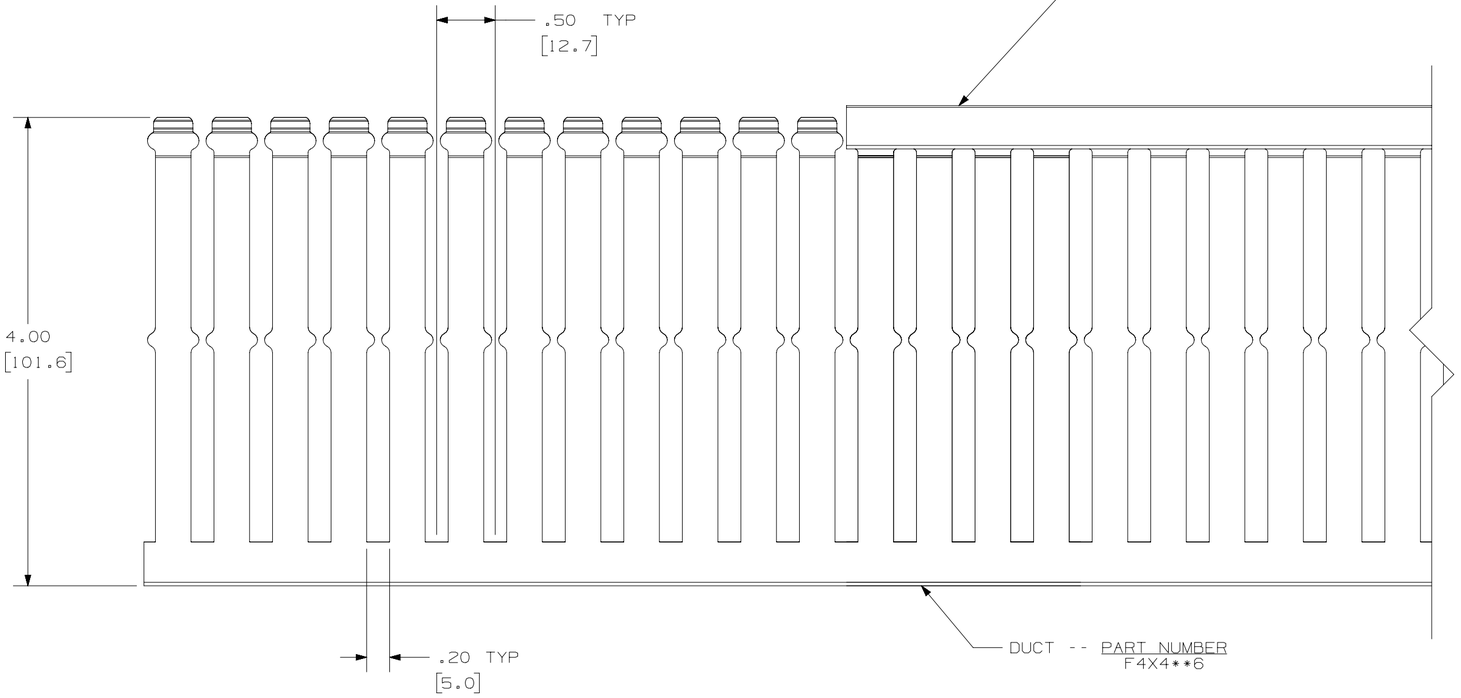

DUCT -- PART NUMBER F4X4**6

NOTES:

1. ALL DIMENSIONS ARE REFERENCE ONLY.
2. DIMENSIONS IN PARENTHESIS ARE METRIC.
3. THE ** DENOTE COLOR.
4. DUCT AND COVER ARE AVAILABLE IN 6 FT [1828.8] LENGTHS

REV	DATE	BY	CHK	APR	DESCRIPTION	ECN
4	03.08.16	BDK	MRJS	RGRO	I. ADDED TOLERANCE	36897-783
3	02-19-13	JBN	RTFI	RTFI	H. UPDATED DRAWING BORDER & TITLE BLOCK	36897-783

TITLE
WIRING DUCT - TYPE F DUCT WITH COVER
4 X 4
MARKETING DRAWING

ITEM REVISION NAME: D11000CU/00
DATASET FILE NAME: D11000CU_DC/00E

UNLESS OTHERWISE SPECIFIED, DIMENSIONAL TOLERANCES ARE: IN [mm]
.X ± .XXX ±
.XX ± ANGLES ±
THIRD ANGLE PROJECTION

MATERIAL: PVC

DRAWING NUMBER: 36897-783

DRAWN BY	DATE	CHK	SCALE		SIZE
JCST	03-20-03	JGG	FULL	SHT 1 OF 1	C