THIS COPY IS PROVIDED ON A RESTRICTED BASIS AND IS NOT TO BE USED IN ANY WAY DETRIMENTAL TO THE INTERESTS OF PANDUIT CORP.

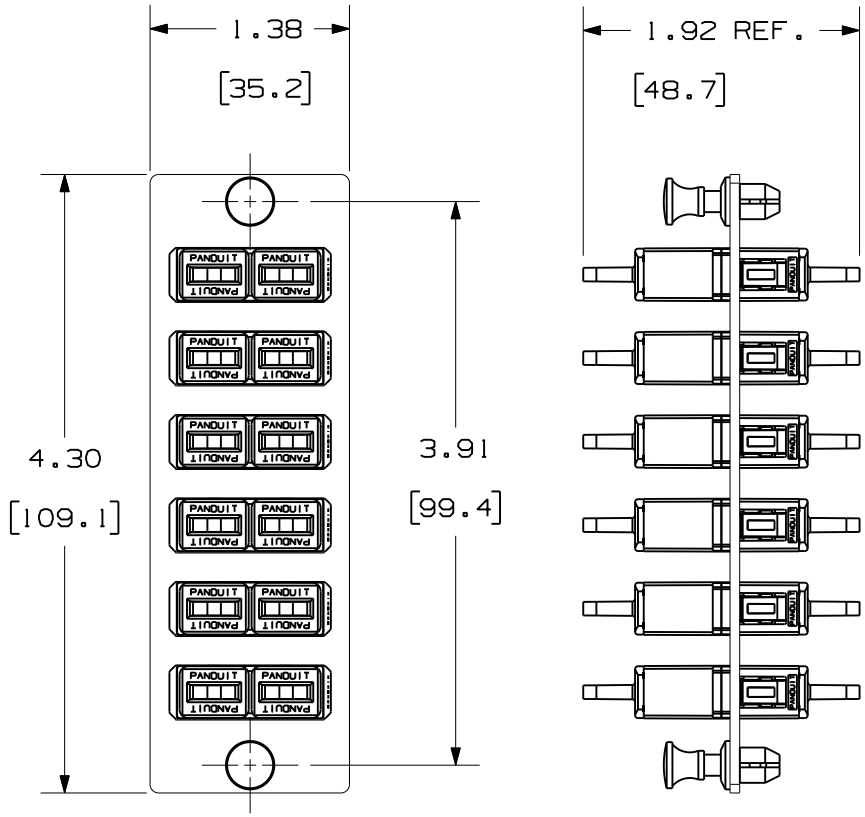

PANDUIT P/N	ADAPTER COLOR	SPLIT SLEEVE TYPE
FAP6WAQDSC	AQUA	PHOS BRONZE
FAP6WBUDSC	BLUE	
FAP6WEIDSC	ELECTRIC IVORY	
FAP6WBLDSC	BLACK	
FAP6WAGDSCZ	APC GREEN	ZIRCONIA
FAP6WAQDSCZ	AQUA	
FAP6WBUDSCZ	BLUE	

NOTES:
1. SEE CURRENT CATALOG FOR PART NUMBER SUFFIXES TO INDICATE COLOR AND/OR PACKAGE QUANTITIES.
2. SEE CATALOG FOR COMPLETE LIST OF PARTS APPLICABLE FOR USE WITH THIS PRODUCT.
3. MATERIALS:
   a. PLATE: C.R.S. POWDER COATED
   b. ADAPTER: COMPOSITE
   c. SPLIT SLEEVE: SEE TABLE
4. DIMENSIONS IN BRACKETS ARE METRIC.

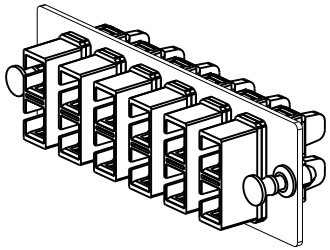

REV	DATE	BY	CHK	DESCRIPTION	ECN - R	CUST	SUP	OTH
01	01-29-09	EFK		RELEASED TO PRODUCTION	01945-32			

6 POSITION DUPLEX SC
FIBER ADAPTER PANEL
CUSTOMER DRAWING

PANDUIT™ CORP.
TINLEY PARK, ILL 60477

THIRD ANGLE PROJECTION

ALL DIMENSIONS ARE GIVEN IN INCHES UNLESS OTHERWISE SPECIFIED.
DIMENSIONAL TOLERANCES ARE:
(.X) (.XXX)±.010 [0.3]
(.XX)±.03 [0.8] ANGLES

REVIEW DRAWING NUMBERS

DRAWN BY MC
DATE 01-13-05
CHK'D PJI

DRAWING FILENAME M01945AL_DC/01B
SCALE NONE
PART NO. FAP6W••DSC FAP6W••DSCZ
DRAWING NO. 01945-32
SIZE A