THIS COPY IS PROVIDED ON A RESTRICTED BASIS AND IS NOT TO BE USED IN ANY WAY DETRIMENTAL TO THE INTERESTS OF PANDUIT CORP.

NOTES:

1. KIT COMES FULLY ASSEMBLED
2. KIT INCLUDES BUSBAR, MOUNTING BRACKETS, INSULATORS, AND MOUNTING HARDWARE.
3. MEETS BICSI/J-STD-607-A
4. DIMENSIONS IN PARENTHESIS ARE MILLIMETERS.

C UL US
LISTED
GROUNDING AND BONDING EQUIPMENT

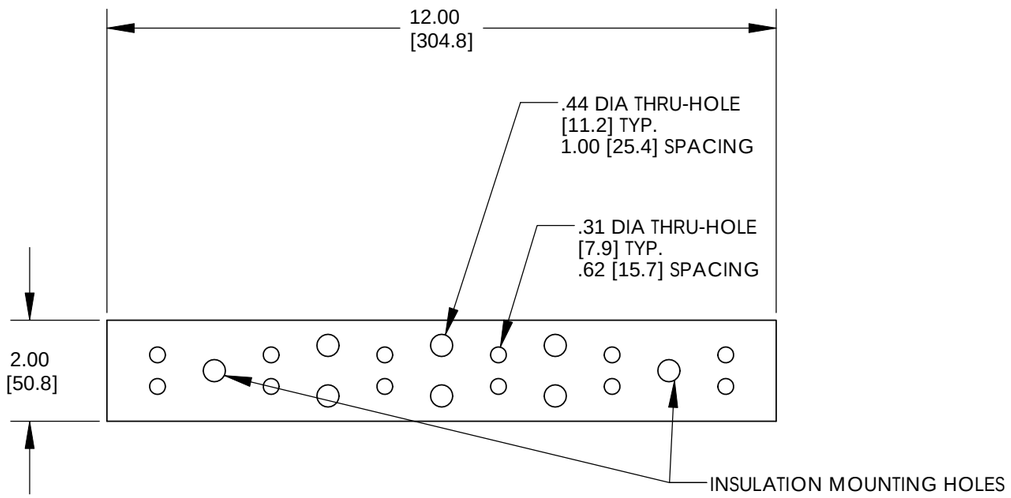

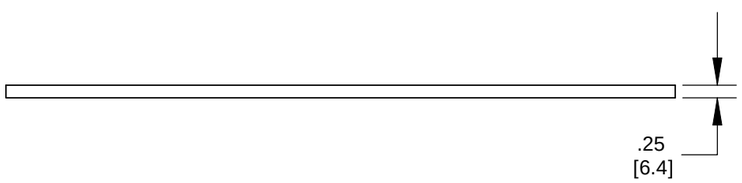

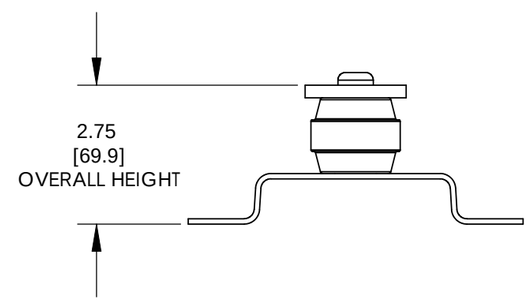

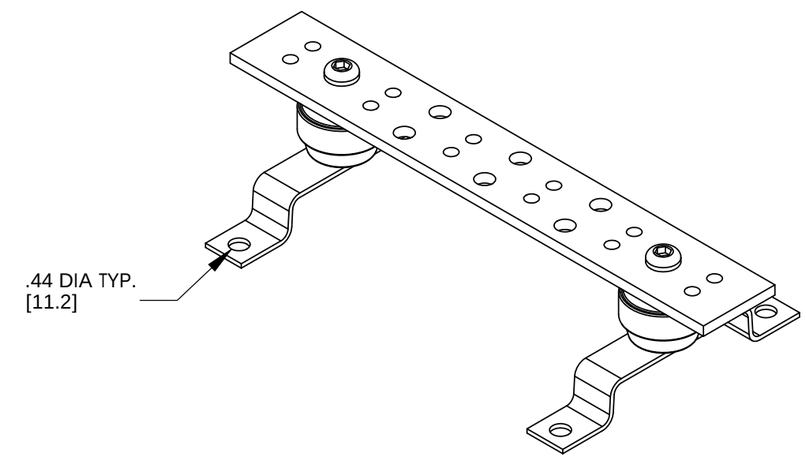

ASSEMBLED AS SHOWN

REV	DATE	BY	CHK	DESCRIPTION	ECN		SUP
04	12/10	JHNU	JHNU	REVISED AGENCY LOGO	N41505BA-C41505	FLD	FLD
03	11/08	JHNU	JHNU	REVISED DRAWING LAYOUT, REMOVED BRACKET VIEWS			
---	-------	----	----	CONVERTED DRAWING TO SOLIDWORKS REVISED BUSBAR BRACKET GEOMETRY			
02	11/08	JHNU	DWDA	REVISED DRAWING TO CURRENT STANDARD			
---	-------	----	----	REVISED HEIGHT DIMENSION: 1.00 WAS 1.50 ADDED NOTE 3			
01	9/06	JHNU	LEM	ADDED OVERALL HEIGHT DIMENSION TO ISO VIEW			
00	2/05	JHNU	LEM	DRAWING RELEASED			

PANDUIT CORP. TINLEY PARK, ILLINOIS

GROUNDING BUSBAR
(GB2B0306TPI)
CUSTOMER DRAWING

UNLESS OTHERWISE SPECIFIED DIMENSIONAL TOLERANCES ARE:
(.X) ± (.XXX) ±
(.XX) ± ANGLES ±

UNLESS OTHERWISE SPECIFIED, ALL DIMENSIONS ARE GIVEN IN INCHES, THIRD ANGLE PROJECTION

DRAWN BY: JHNU
MAT'L:
DATE: 2/05
CHK'D:
SCALE: NONE
DRAWING NO / CAD FILE: C41505_04
DWG SIZE: B