THIS COPY IS PROVIDED ON A RESTRICTED BASIS AND IS NOT TO BE USED IN ANY WAY DETRIMENTAL TO THE INTERESTS OF PANDUIT CORP.

NOTES:
1. INDUSTRIAL USB COUPLER MODULE
2. USB 2.0 COMPLIANT AND BACKWARDS COMPATIBLE TO USB 1.1
3. ACCEPTS (2) USB PATCH CORDS
4. DIMENSIONS IN PARENTHESES ARE METRIC.
5. MOUNTS IN COMMON NEMA 1-13/64"(30.5mm) DIAMETER ENCLOSURE OPENING.
6. MOUNTS IN PANEL THICKNESS OF .035" TO .135"
7. INTRUSION PROTECTION RATED TO IP67

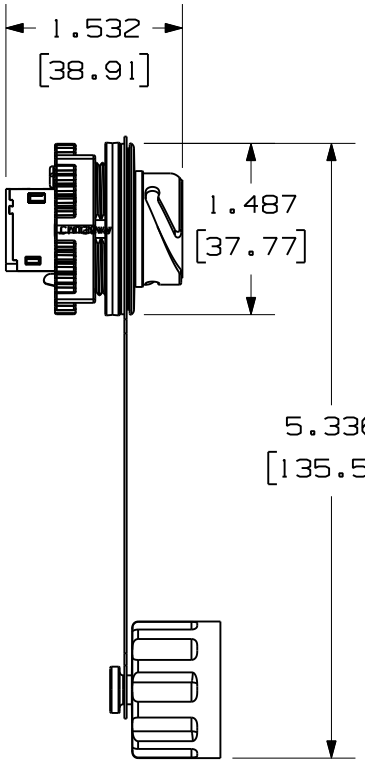


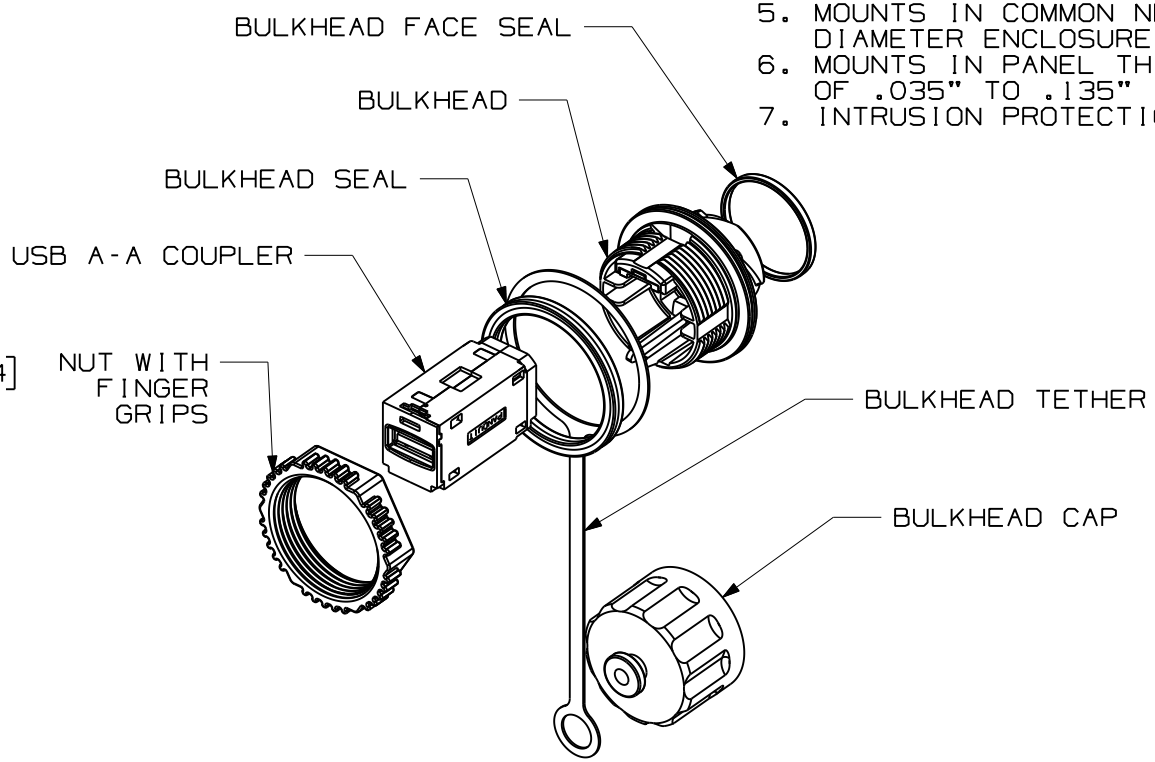


| | | | | | | | | | |
|---|---|---|---|---|---|---|---|---|---|
| R | 2-21-12 | BJN | JCO | RELEASED TO PRODUCTION | 02731-17 | JCO | EJH | | |
| REV | DATE | BY | CHK | DESCRIPTION | ECN - R | | CUST | SUP | OTH |

MODEL FILENAME: M02731AV/00

DRAWING FILENAME: M02731AV_DC19/00A

SIZE: A

INDUSTRIALNET USB A-A COUPLER WITH BULKHEAD CUSTOMER DRAWING

PANDUIT®
TINLEY PARK, IL 60487

THIRD ANGLE PROJECTION

ALL DIMENSIONS ARE GIVEN IN INCHES, UNLESS OTHERWISE SPECIFIED.
DIMENSIONAL TOLERANCES ARE:
(.X) ± (.XXX) ±.010(.25)
(.XX) ±.031(.8) ANGLES ±

DRAWN BY: BJN
DATE: 2-21-12
CHK'D: JCO

REVIEW DRAWING NUMBERS

MAT'L

I.I. NUMBER

PRODUCT SPEC/ PKG SPEC

ASSY METHOD/ TEST METHOD

SCALE

PART NO.: IAEBHUSBAA

DRAWING NO.: 02731-19