THIS COPY IS PROVIDED ON A RESTRICTED BASIS AND IS NOT TO BE USED IN ANY WAY DETRIMENTAL TO THE INTERESTS OF PANDUIT CORP.

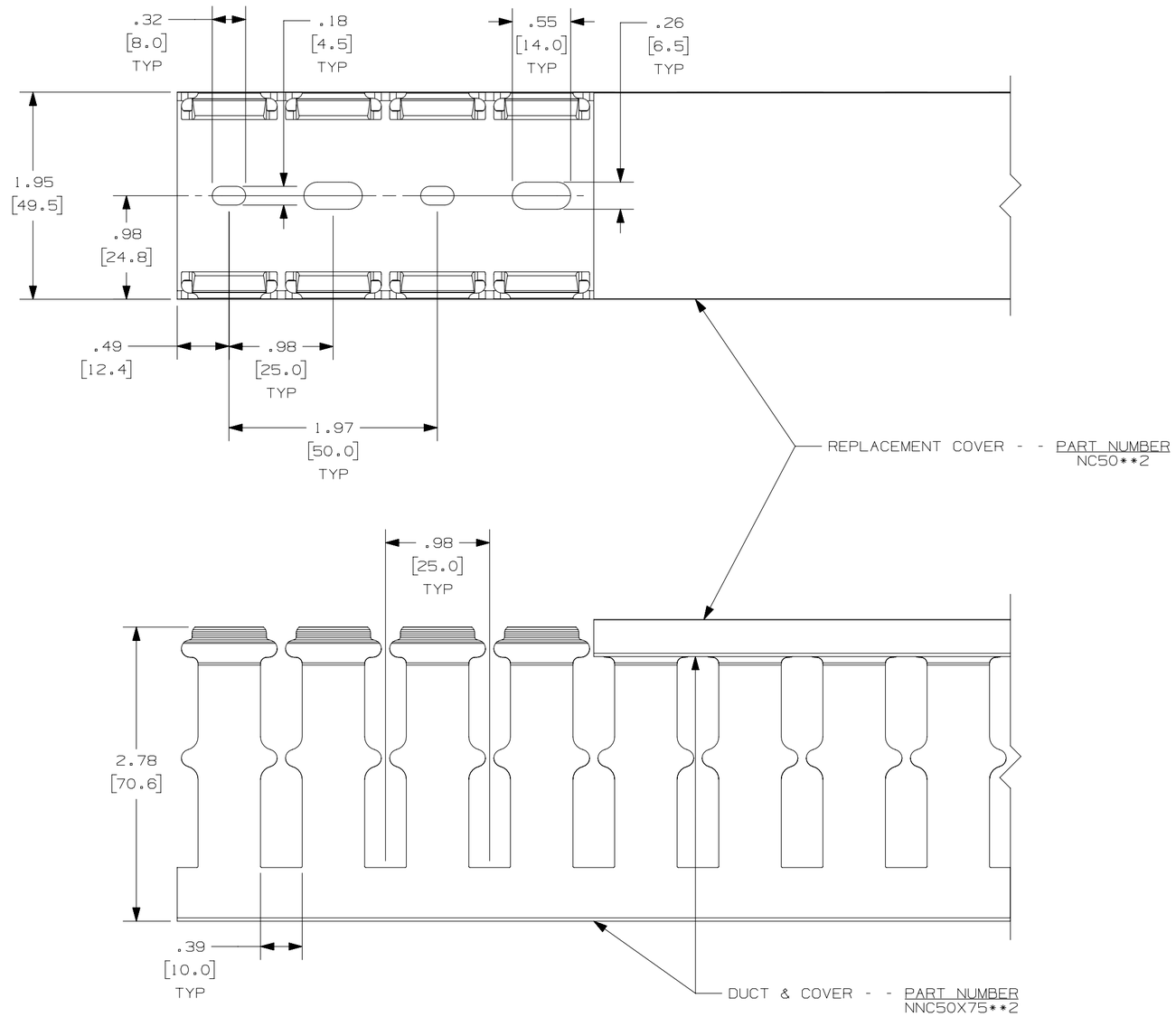

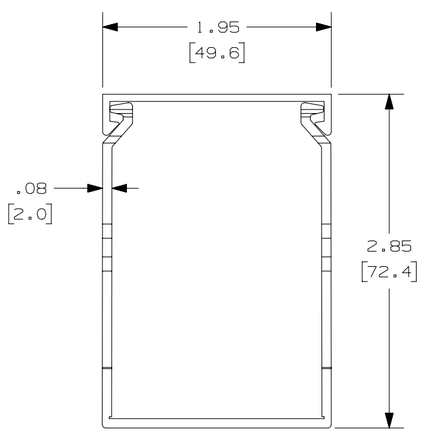

NOTES:

1. ALL DIMENSIONS ARE REFERENCE ONLY.
2. DIMENSIONS IN PARENTHESIS ARE METRIC.
3. THE ** DENOTE COLOR.
4. DUCT AND COVER ARE AVAILABLE IN 6.56 FT, 2 METER [2000.0] LENGTHS.

REV	DATE	BY	CHK	APR	DESCRIPTION	ECN
3	03-23-13	JBN	RTFI	RTFI	J. UPDATED DRAWING BORDER & TITLE BLOCK	36897-792

TITLE
WIRING DUCT - TYPE NNC DUCT WITH COVER
50 X 75
MARKETING DRAWING

ITEM REVISION NAME: D11000JH/01
DATASET FILE NAME: D11000JH_DC/01C

UNLESS OTHERWISE SPECIFIED, DIMENSIONAL TOLERANCES ARE: IN [mm]
.X ± .XXX ±
.XX ± ANGLES ±
THIRD ANGLE PROJECTION

MATERIAL: HALOGEN FREE MODIFIED PPO

DRAWING NUMBER: 36897-792

DRAWN BY	DATE	CHK	SCALE	SIZE
JHNU	09-23-03	JGG	FULL	C

SHT 1 OF 1

D101000C/12