THIS COPY IS PROVIDED ON A RESTRICTED BASIS AND IS NOT TO BE USED IN ANY WAY DETRIMENTAL TO THE INTERESTS OF PANDUIT CORP.

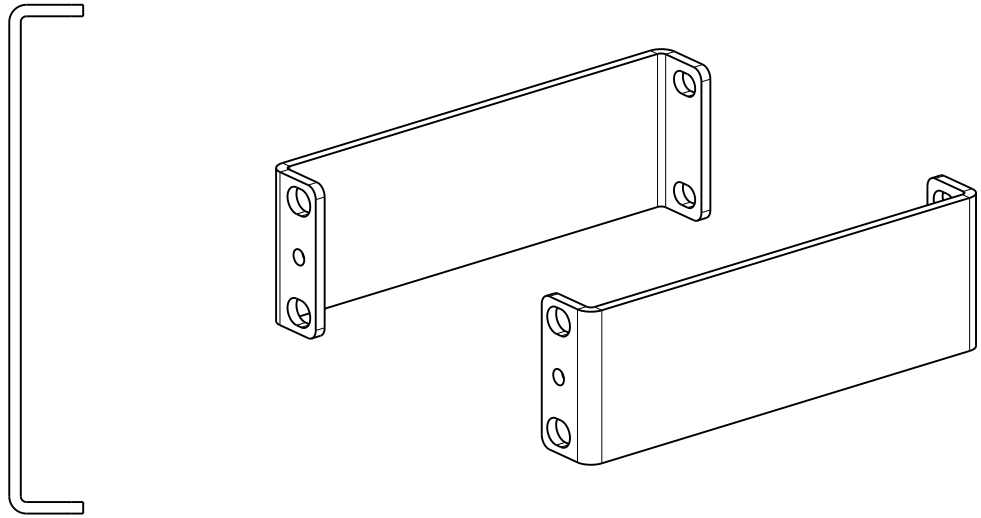

PANDUIT PART NO.	WEIGHT
RSBIC	.71 LBS/EACH .32 kgs/EACH

NOTES:
1. SEE CURRENT CATALOG FOR ADDITIONAL PART NUMBER SUFFIXES TO INDICATE COLOR AND OR PACKAGE QUANTITY.
2. SEE CATALOG FOR COMPLETE LIST OF PARTS APPLICABLE FOR USE WITH THIS PART.
3. DIMENSIONS IN PARENTHESES ARE IN METRIC.
4. PART INCLUDES:
   2 - RACK STANDOFF BRACKETS - 5.3"
   4 - #12-24 X .5" BONDING SCREWS

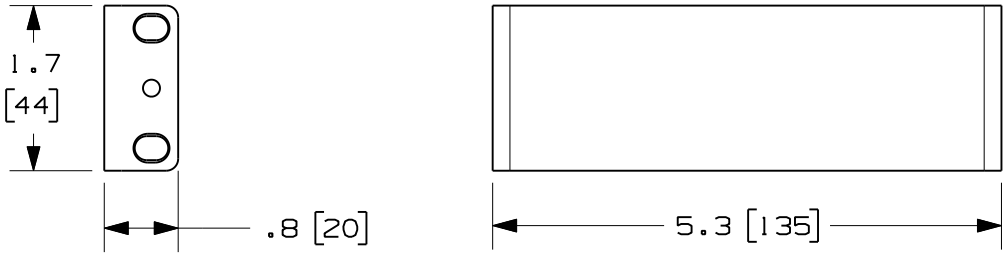

REV	DATE	BY	CHK	DESCRIPTION	ECN - R	CUST	SUP	OTH
00A	1-30-12	PM		RELEASED TO PRODUCTION	09V065AX-DC			

MODEL FILENAME: 09V065AX/00

CAD FILENAME/LAYERS: 09V065AX_DC/00A

PANDUIT CORP. TINLEY PARK, ILLINOIS

RACK STANDOFF BRACKET - 5.3"
(RSBIC) CUSTOMER DRAWING

UNLESS OTHERWISE SPECIFIED, DIMENSIONAL TOLERANCES ARE:

INCHES		[METRIC - MILLIMETER]		ANGLE
X.X	+/- 0.03	X.	+/- 0.8	+/- 1°
X.XX	+/- 0.015	X.X	+/- 0.4	
X.XXX	+/- 0.005	X.XX	+/- 0.13	

UNLESS OTHERWISE SPECIFIED, ALL DIMENSIONS ARE GIVEN IN INCHES, THIRD ANGLE PROJECTION.

DRAWN BY: PM

DATE: 1-30-12

CHK'D:

MAT'L: N/A

SCALE: 1:2

DRAWING NO.: 09V065AX-DC

DWG SIZE: A