Technical Datasheet
Long Span Cable Tray

Joint Connector

vertical

WSGV 200

EAN Code: 4013339307708
Smallest packaging unit:1 pc.

the photorealistic images are to be considered as reference images

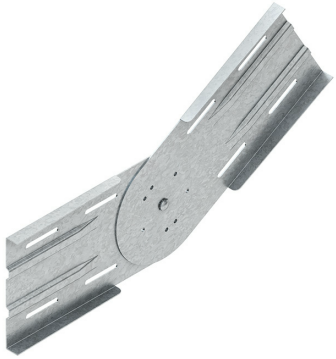

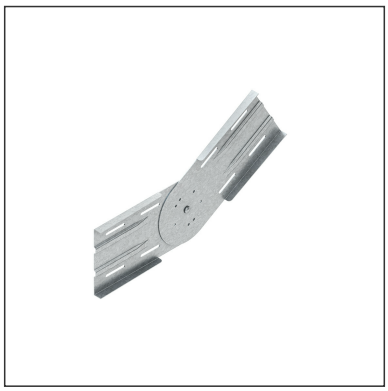

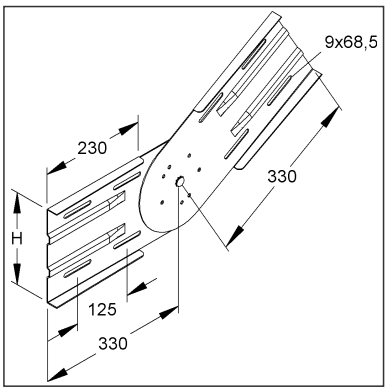

Article Description

Joint connector, vertical, height 201,5 mm, steel, pre-galvanised according to DIN EN 10346, incl. accessories

Incl. accessories

1 piece = 1 piece	✓ lowest delivery unit	– preferred delivery unit

Model No.	Description	quantity
FLM 8X13 F	Mushroom-head bolt M8, similar DIN 603, length 13 mm, steel, hot dip galvanised DIN EN ISO 1461	6 pcs.

Additional Price Information

Article group	N13
quantity unit	pcs.

Technical Datasheet
Long Span Cable Tray

WSGV 200

the photorealistic images are to be considered as reference images

Weight

Weight per quantity unit	3,001 kg / pcs.
Weight in kg per 100	300 kg / 100pcs.

Physical Article Dimensions

Height	205.50 mm
Width	37.50 mm
Depth/length	660 mm

Packing Dimension

1 piece = 1 piece		✓ VP1-smallest packaging unit (PU)			
Lenght	660 mm	Width	38.00 mm	Height	206 mm
Gross weight	3 kg	Volume	0,005 m³		
Min. quantity	1.00 pcs.	Max. Quantity	1.00 pcs.		

Tender Text

```
Adjustable splice plate, vertical, for creating vertical angle connections of
continuous wide span cable trays/ladders, including proportional fastening
accessories in hot-dip galvanised. Equipotential bonding is achieved by bolting
to the wide span cable tray/ladder beams and the fitting beams.
Used for : wide span cable trays/ladders and their fittings with an edge height
of 200 mm
Requirement : 2 pieces per joint
Dimensions (approx. dimensions)
Height H : 201.5 mm
Material : steel, pre-galvanised acc. to DIN EN 10346
NIEDAX Model No. : WSGV 200
EP Material___________ EP Wage__________
Unit price/piece
```

Safety & Environment

REACH Date	25.06.2025
REACH Info	Conformable
RoHS Info	Conformable

Origin & International Trade

Country of origin	DE
Federal State of Origin	RP
Customs tarif number	73089059