Technical Datasheet
Long Span Cable Ladder

Wide Span Cable Ladder

rung spacing 300 mm, with particularly pronounced perforated and beaded side profiles, with riveted C-profile rungs open at the top, with 16 mm slot width

WSLM 150.300

EAN Code: 4013339893416
Smallest packaging unit:6 m
quantity unit:m M

the photorealistic images are to be considered as reference images

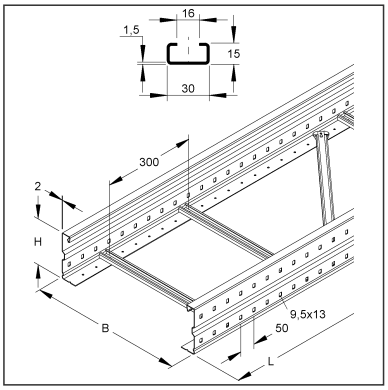

Article Description

Wide span cable ladder, 150x300x6000 mm, t=2,0 mm, perforated, steel, pre-galvanised according to DIN EN 10346

Additional Price Information

Article group	N13
quantity unit	m

Weight

Weight per quantity unit	8,741 kg / m
Weight in kg per 100	874 kg / 100m

Technical Datasheet
Long Span Cable Ladder

WSLM 150.300

the photorealistic images are to be considered as reference images

Physical Article Dimensions

Height	150.00 mm
Width	300 mm
Depth/length	6000 mm

Load Specifications

Load diagram: q = evenly distributed cable load (tested acc. to DIN EN IEC 61537)

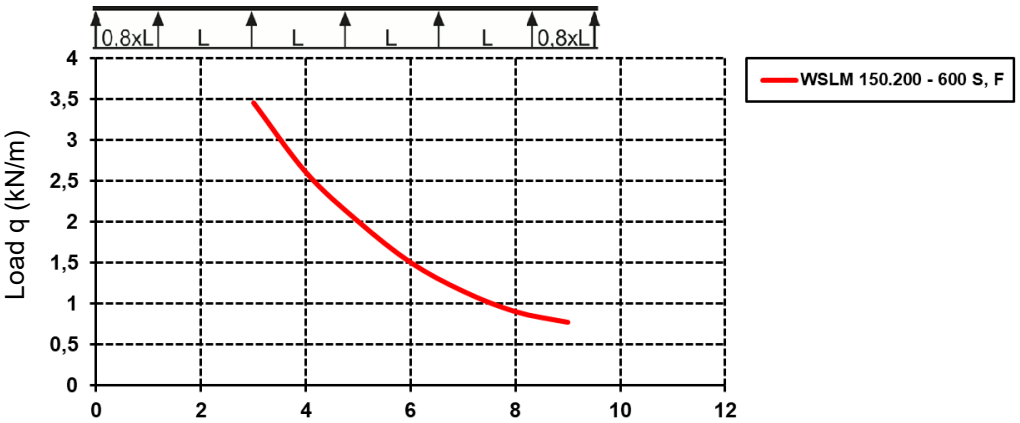

Fixing distance (m)

The load details shown in the diagram are independent of the position of the connectors.

Packing Dimension

6 meters = 1 piece		✓ VP1-smallest packaging unit (PU)		✓ VP1-preferred PU	
Lenght	6000 mm	Width	300 mm	Height	150.00 mm
Gross weight	52 kg	Volume	0,270 m³		
Min. quantity	6.00 m	Max. Quantity	6.00 m		

Tender Text

```
Wide span cable ladder, acc. to DIN EN 61537, with particularly pronounced,
continuously perforated and beaded side rails, as well as riveted rungs of C-
profile with 16 mm slot width. Corresponding U-clamps: B... and BK...
Please order splice plate WSV 150.500 separately.
Dimensions (approx. dimensions)
Height H x width W : 150 x 300 mm
Material thickness : 2 mm
Rung distance : 300 mm
Side rail perforation : 9.5 x 13 mm
Hole distance : 50 mm
Base perforation : Ø 5.4 mm
Hole distance : 50 mm
Delivery length : 6000 mm
Usable cross-section : 38335 mm²
Material : Steel, pre-galvanised acc. to DIN EN 10346
NIEDAX Model No. : WSLM 150.300
EP Material___________ EP Wage__________
Unit price/meter
```

Technical Datasheet
Long Span Cable Ladder

WSLM 150.300

the photorealistic images are to be considered as reference images

Safety & Environment

REACH Date	25.06.2025
REACH Info	Conformable
RoHS Info	Conformable

Origin & International Trade

Country of origin	DE
Customs tarif number	73089059

Related items

Cover

Model No.	Description
WDRS 20	Turning bolt with locknut acc. to DIN EN ISO 10511, for WSL/WRL, steel, pre-galvanised according to DIN EN 10346, incl. accessories
WDV 300	Cover for WSL/WRL, w. joint strip, 304x3000 mm, with turning lock, steel, pre-galvanised according to DIN EN 10346

Barrier strip

Model No.	Description
KLWC 16	Barrier strip fastening clamp, for 16 mm slot width, steel, pre-galvanised according to DIN EN 10346, incl. accessories
RW 110	Barrier strip, 98x3000 mm, t=0,9 mm, steel, pre-galvanised according to DIN EN 10346, incl. accessories

Connector

Model No.	Description
WSV 150.500	Splice plate, 151,5x500 mm, steel, pre-galvanised according to DIN EN 10346, incl. accessories