99.99% EFFICIENCY on 0.3 µm				
Qty	Part Number	Size (in) (H x W x D)	Style Code	RATED CFM @ 0.8 in wg
	905-301-003	24 x 24 x 11-1/2	E24A24AA1P13T2T0BA	2000
	905-301-024	24 x 12 x 11-1/2	E24A12AA1P13T2T0BA	925
	E12A24AA1P13T2T0BA	12 x 24 x 11-1/2	E12A24AA1P13T2T0BA	925
	E23D23DA1P13T2T0BA	23-3/8 x 23-3/8 x 11-1/2	E23D23DA1P13T2T0BA	1900
	905-301-069	23-3/8 x 11-3/8 x 11-1/2	E23D11DA1P13T2T0BA	850
	905-301-054	11-3/8 x 23-3/8 x 11-1/2	E11D23DA1P13T2T0BA	850

99.995% EFFICIENCY on MPPS (H14)				
Qty	Part Number	Size (in) (H x W x D)	Style Code	RATED CFM @ 1.0 in wg
	905-301-050	24 x 24 x 11-1/2	E24A24AA1T22T2T0BA	2000
	905-301-053	24 x 12 x 11-1/2	E24A12AA1T22T2T0BA	925
		12 x 24 x 11-1/2	E12A24AA1T22T2T0BA	925
		23-3/8 x 23-3/8 x 11-1/2	E23D23DA1T22T2T0BA	1900
		23-3/8 x 11-3/8 x 11-1/2	E23D11DA1T22T2T0BA	850
		11-3/8 x 23-3/8 x 11-1/2	E11D23DA1T22T2T0BA	850

OPTIONS		CHECK BOX
GASKET MATERIAL	URETHANE	
	EPDM	
GASKET LOCATION	UPSTREAM	
	BOTH FACES	
	NONE	
FACEGUARD	UPSTREAM	
	DOWNSTREAM	
	BOTH FACES	
FRAME	304 SS	
	409 SS	
	ALUMINUM	

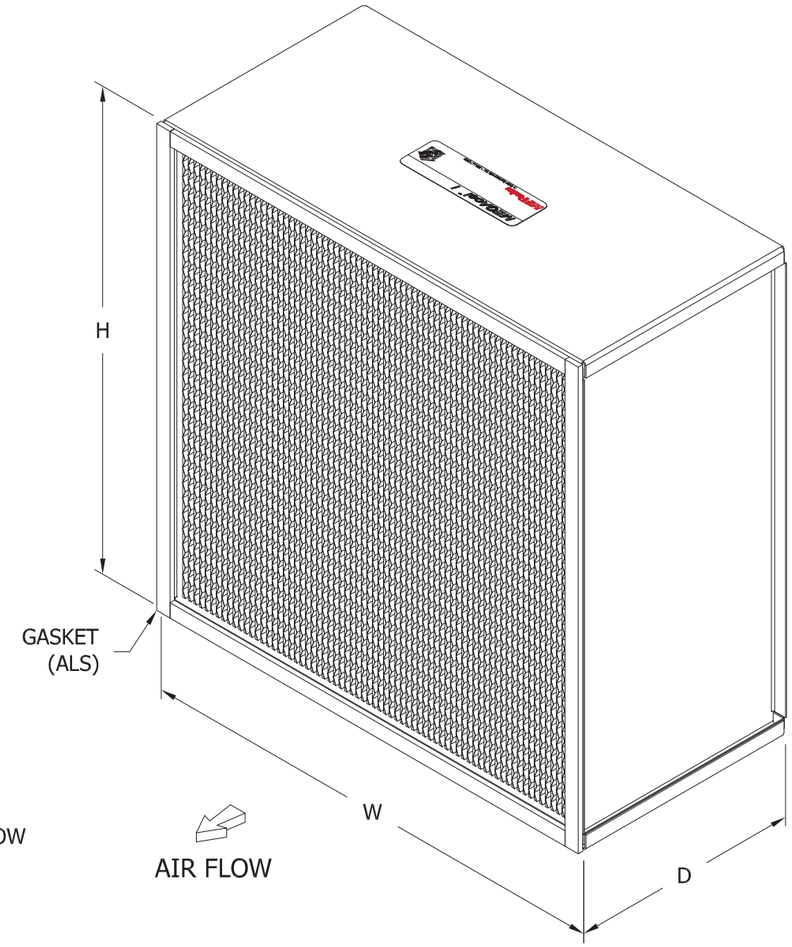

NOTES:

FRAME - 18 GA. GALVANIZED, COLD ROLLED STEEL
TOLERANCE:
HEIGHT AND WIDTH - >12" +0, -0.125"
≤12" +0, -.0625"
DEPTH - +.0625, -0
DIAGONALS - ≤30" DIAGONALS WITHIN 0.125"
>30" DIAGONALS WITHIN 0.250"
SEPARATORS - TAPERED CORRUGATED ALUMINUM FOIL
SEALANT - PHOSPHORUS FREE, FIRE RETARDANT POLYURETHANE
MEDIA - PAO COMPATIBLE EXPANDED POLYTETRAFLUOROETHYLENE (eFRM) MEMBRANE WITH PROTECTIVE NON WOVEN SYNTHETIC SCRIM
GASKET - 0.25" THICK X 0.75" WIDE NEOPRENE SPONGE DOWNSTREAM
CLASSIFICATION - UL-900
MAXIMUM OPERATING TEMPERATURE - 150°F

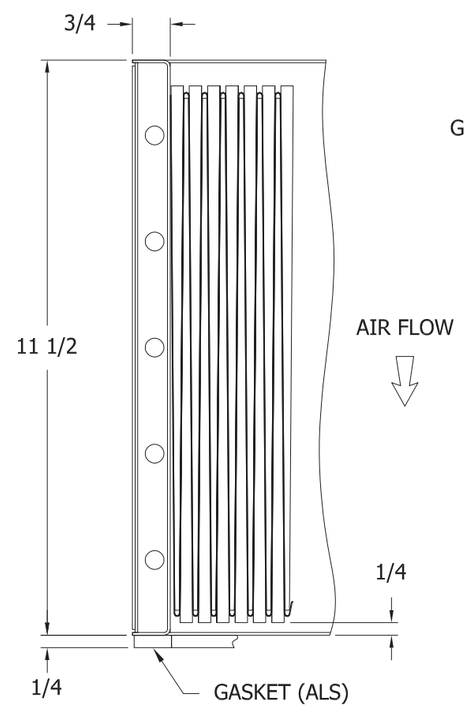

SIDE SECTION

SALES/SUBMITTAL DRAWING

APPROVAL BLOCK
☐ OKAY AS IS ☐ OKAY WITH REVISIONS NOTED
SIGNATURE: _____ DATE: _____

CONFIDENTIAL
©2015 AAF INTERNATIONAL. ALL RIGHTS RESERVED. THIS DRAWING AND THE INFORMATION CONTAINED OR REFERENCED HEREIN REMAINS THE EXCLUSIVE PROPERTY OF AAF INTERNATIONAL AND IS LOANED IN STRICT CONFIDENCE WITH THE UNDERSTANDING THAT IT WILL NOT BE REPRODUCED NOR USED FOR ANY PURPOSE EXCEPT FOR WHICH IT WAS LOANED. THIS DRAWING SHALL BE IMMEDIATELY RETURNED OR DESTROYED UPON REQUEST AND IS SUBJECT TO ALL OTHER TERMS AND CONDITIONS OF ANY WRITTEN AGREEMENT OR PURCHASE ORDER TO WHICH IT RELATES.

AAF INTERNATIONAL
a member of DAIKIN group
P.O. Box 35690
Louisville, KY
40232-5690
www.aafintl.com

THIRD ANGLE PROJECTION	MODELED BY: gac	DATE: 01NOV2019
	DRAWN BY: GAC	DATE: 11NOV2019
TOLERANCE UNLESS NOTED OTHERWISE ± 1/16" - ± 1/2°	CHECKED BY: GC	DATE: 15NOV2019
	APPROVED BY: MAR	DATE: 12DEC2019

TITLE
SUBMITTAL - MEGAcel I eFRM
METAL FRAME, GASKET SEAL

ESTIMATED WEIGHT:		DRAWING NUMBER 3172539	
SECTION NUMBER 105	SHEET SIZE B	SHEET 1 OF 1	REV. B