QTY	PART NUMBER	STYLE CODE NUMBER	H	W	D	RATED CFM @ 1.1 in wg (NOMINAL)	GEL TROUGH
	905-401-037	E24A24AA1T22F6F0AA	24	24	11 1/2	2400	AES (UPSTREAM) (with EXTRACTION CLIPS)
	905-401-038	E24A12AA1T22F6F0AA	24	12	11 1/2	1125	
	905-401-039	E12A24AA1T22F6F0AA	12	24	11 1/2	1125	
	905-401-045	E23D23DA1T22F6F0AA	23 3/8	23 3/8	11 1/2	2275	
	905-401-046	E23D11DA1T22F6F0AA	23 3/8	11 3/8	11 1/2	1025	
	905-401-047	E11D23DA1T22F6F0AA	11 3/8	23 3/8	11 1/2	1025	
	905-401-016	E24A24AA1T22F5F0AA	24	24	11 1/2	2400	ALS (DOWNSTREAM) (with EXTRACTION CLIPS)
	905-401-017	E24A12AA1T22F5F0AA	24	12	11 1/2	1125	
	905-401-018	E12A24AA1T22F5F0AA	12	24	11 1/2	1125	
	905-401-041	E23D23DA1T22F5F0AA	23 3/8	23 3/8	11 1/2	2275	
	905-401-042	E23D11DA1T22F5F0AA	23 3/8	11 3/8	11 1/2	1025	
	905-401-043	E11D23DA1T22F5F0AA	11 3/8	23 3/8	11 1/2	1025	

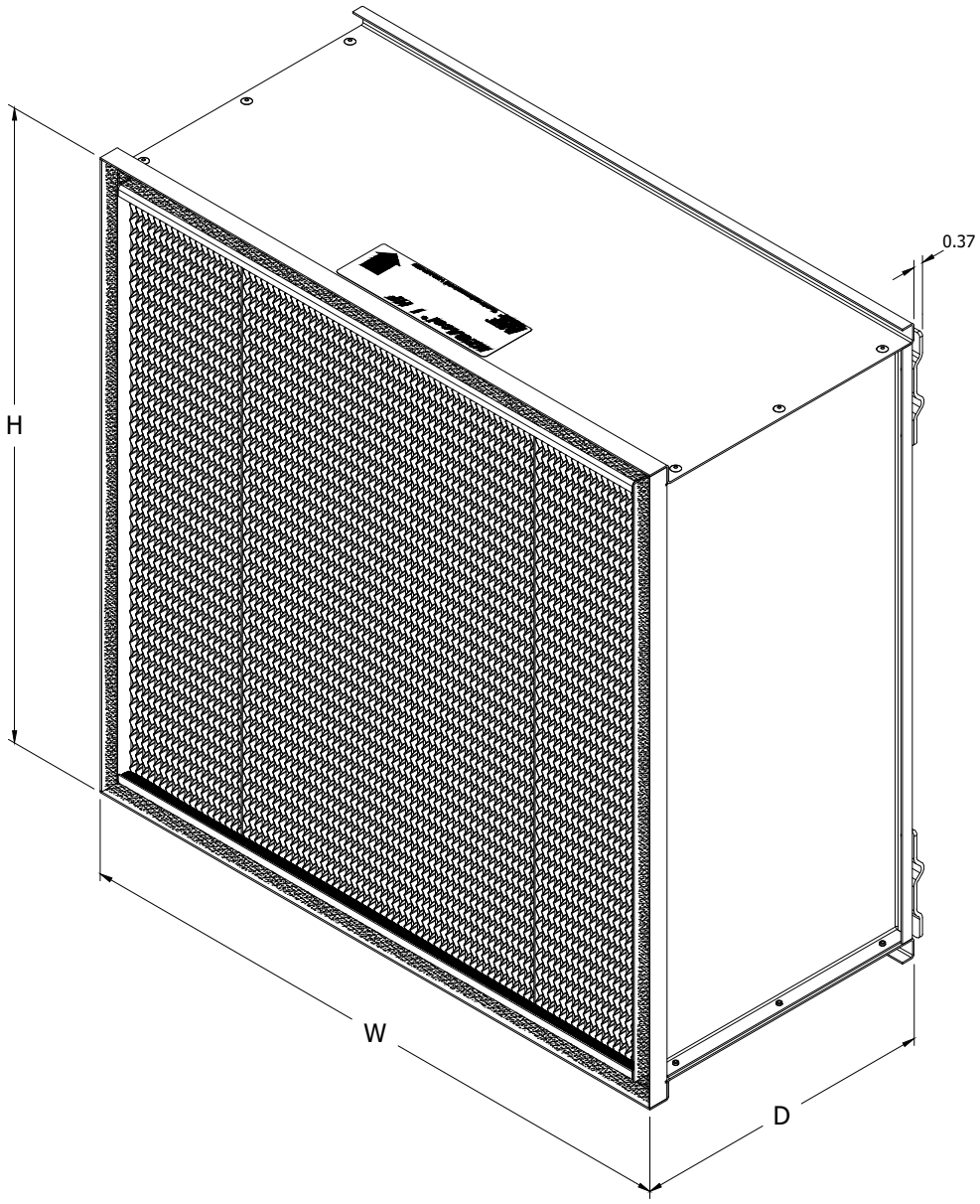

(-001 SHOWN)

NOTES:

FRAME - 18 GA. GALVANIZED, COLD ROLLED STEEL

TOLERANCE:
- HEIGHT AND WIDTH - >12" +0, -0.125"
  ≤12" +0, -.0625"
- DEPTH - +.0625, -0
- DIAGONALS - WITHIN 0.125"

SEPARATORS - TAPERED CORRUGATED ALUMINUM FOIL REINFORCED WITH 0.063 THK ALUMINUM PLATE

SEALANT - PHOSPHORUS FREE, FIRE RETARDANT POLYURETHANE

MEDIA - MEGACEL MEMBRANE MEDIA

GASKET - SILICONE GEL IN TROUGH, WITH EXTRACTION CLIPS

CLASSIFICATION - UL-900

MAXIMUM OPERATING TEMPERATURE - 150°F

MAXIMUM FILTER DIMENSIONS
- HEIGHT: 24"
- WIDTH: 24"
- DEPTH: 11 1/2"

SALES/SUBMITTAL DRAWING

APPROVAL BLOCK
☐ OKAY AS IS ☐ OKAY WITH REVISIONS NOTED
SIGNATURE: _____ DATE: _____

REV	DWG BY	DATE	APPR BY	DATE	DESCRIPTION OF CHANGE
B	GAC	25AUG 2026	RAL	26AUG 2026	(A02753) REVISED CFM FOR HALF SIZES, WAS 900 & 850; REMOVED ALL 12x12 FILTERS
A	GAC	31JUL 2026	RAL	06AUG 2026	(A02750) ADDED MAXIMUM DIMENSIONS

CONFIDENTIAL
©2015 AAF INTERNATIONAL ALL RIGHTS RESERVED. THIS DRAWING AND THE INFORMATION CONTAINED OR REFERENCED HEREIN REMAINS THE EXCLUSIVE PROPERTY OF AAF INTERNATIONAL AND IS LOANED IN STRICT CONFIDENCE WITH THE UNDERSTANDING THAT IT WILL NOT BE REPRODUCED NOR USED FOR ANY PURPOSE EXCEPT FOR WHICH IT WAS LOANED. THIS DRAWING SHALL BE IMMEDIATELY RETURNED OR DESTROYED UPON REQUEST AND IS SUBJECT TO ALL OTHER TERMS AND CONDITIONS OF ANY WRITTEN AGREEMENT OR PURCHASE ORDER TO WHICH IT RELATES.

AAF
a member of DAIKIN group
P.O. Box 35690 Louisville, KY. 40232-5690
www.aafintl.com

THIRD ANGLE PROJECTION
TOLERANCE UNLESS NOTED OTHERWISE ± 1/16" - ± 1/2"

		DATE
MODELED BY:	gac	1SSEP2025
DRAWN BY:	GAC	05MAR2026
CHECKED BY:	GC	05MAR2026
APPROVED BY:	RAL	10MAR2026

TITLE
FILTER ASSEMBLY, MEGACEL I HF (GEL) (WITH EXTRACTION CLIPS) (SUBMITTAL)

ESTIMATED WEIGHT:
DRAWING NUMBER 3192340
SECTION NUMBER 105
SHEET SIZE A
SHEET 1 OF 1
REV. B