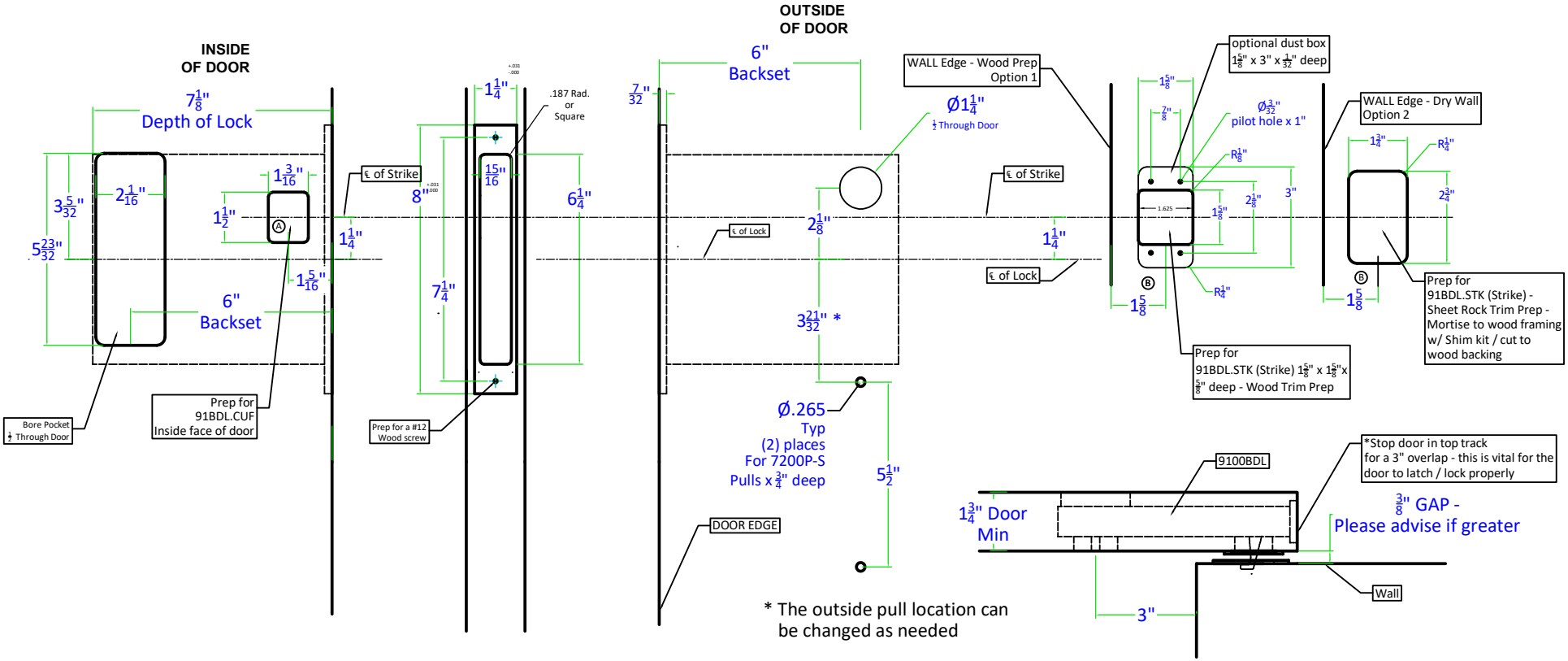

ACCURATE
LOCK & HARDWARE
AMERICAN CRAFTED SINCE 1972

9100BDL-3 6" BS x Cylinder x 7200P-S Pull x S2002T

T-ALH.9100BDL-3 x 7200P.S2002T