Lock Functions	Inside of door: "A" knob/lever = 3/4" dia.	Inside of door: "B" thumbturn = 5/8" dia.	Inside of door: "C" cylinder = $1\frac{1}{4}$" dia.	Outside of door: "D" knob/lever = 3/4" dia.	Outside of door: "E" ER or indicator = 5/8" dia.	Outside of door: "F" cylinder = $1\frac{1}{4}$" dia.
8500ADL	●			●		
8501						●
8502			●			●
8503		●				●
8522	●		●	●		●
8524	●	●		●		●
8525	●			●		
8539	●	●		●	○	
8548	●	●		●		●
8556	●			●		●
8559	●			●		●

● Required Holes
○ Optional Holes

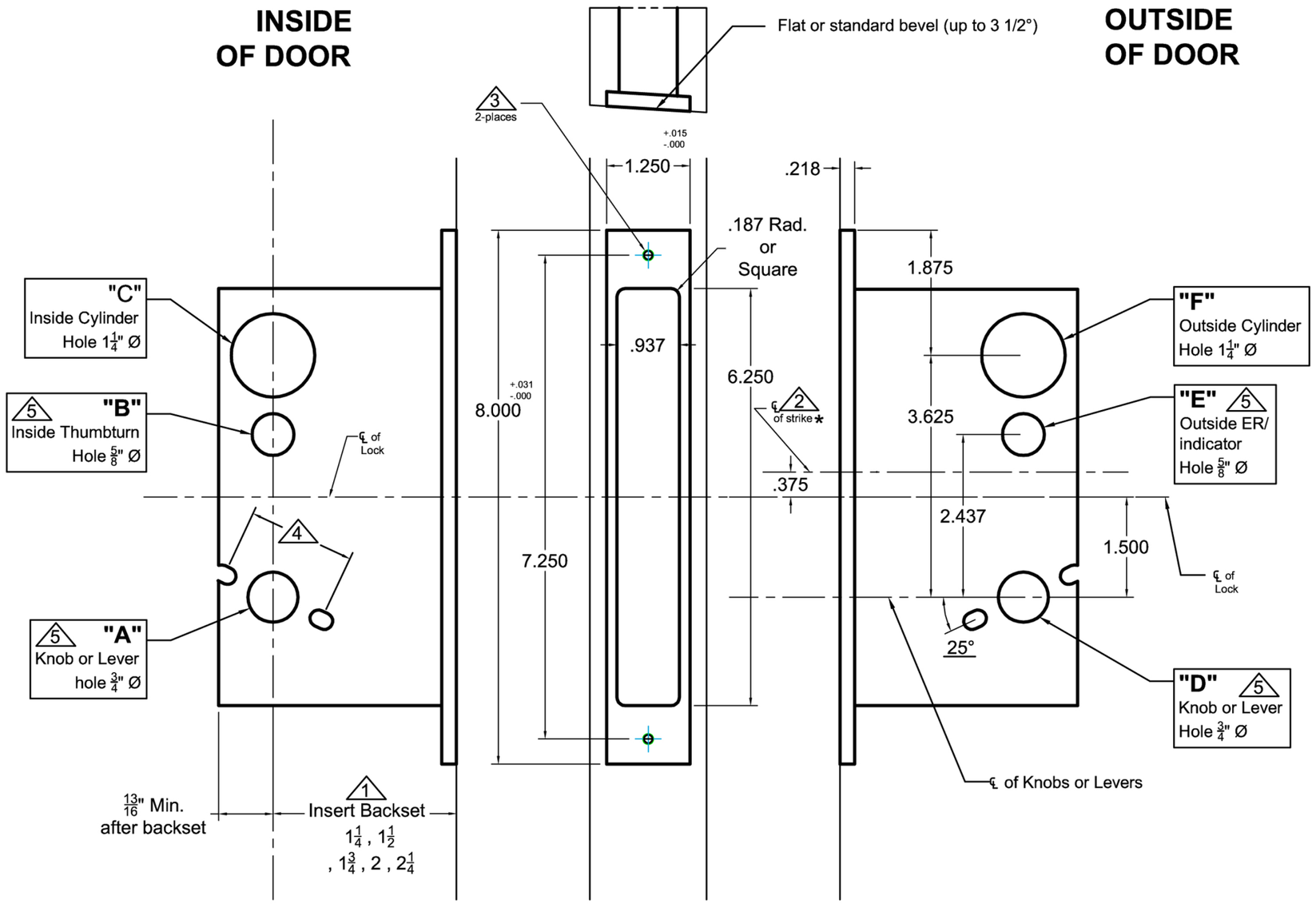

Notes:

1. Insert backset here $1\frac{1}{4}$", $1\frac{1}{2}$", $1\frac{3}{4}$", 2", $2\frac{1}{4}$"
2. ASA strike details on template # T-ALH.ASA.STK (*use template #T-ALH.ASADB.STK for #s 8501,8502 and 8503)
3. Prep for #12 wood or 12-24 machine screws
4. Thru bolting holes **ONLY** if required. See trim manufacturers standard template for details.
   Accurate lock's accommodates $1\frac{1}{2}$" to $1\frac{11}{16}$" center to centers and up to $\frac{1}{4}$" dia. post.
   If there are any additional questions about the thru-bolting, please contact our office.
5. Knob, thumbturn and ER holes may vary from different trim manufacturers. Please refer to their templates to confirm these dimensions.

Additional Notes:

- a) **Responsibility**: Door and frame manufacturers are responsible for providing adequate construction or re-inforcement for proper installation of hardware shown.
- b) Please contact us if a double lip strike is needed - for a proper template
- c) See catalog / spec sheets for additional lock details

ACCURATE
LOCK & HARDWARE
AMERICAN CRAFTED SINCE 1972

Standard 8500 Lever x Lever or Knob x Knob- All Backsets

T-ALH.8500.LL

P: 203.348.8865 W: accuratelockandhardware.com