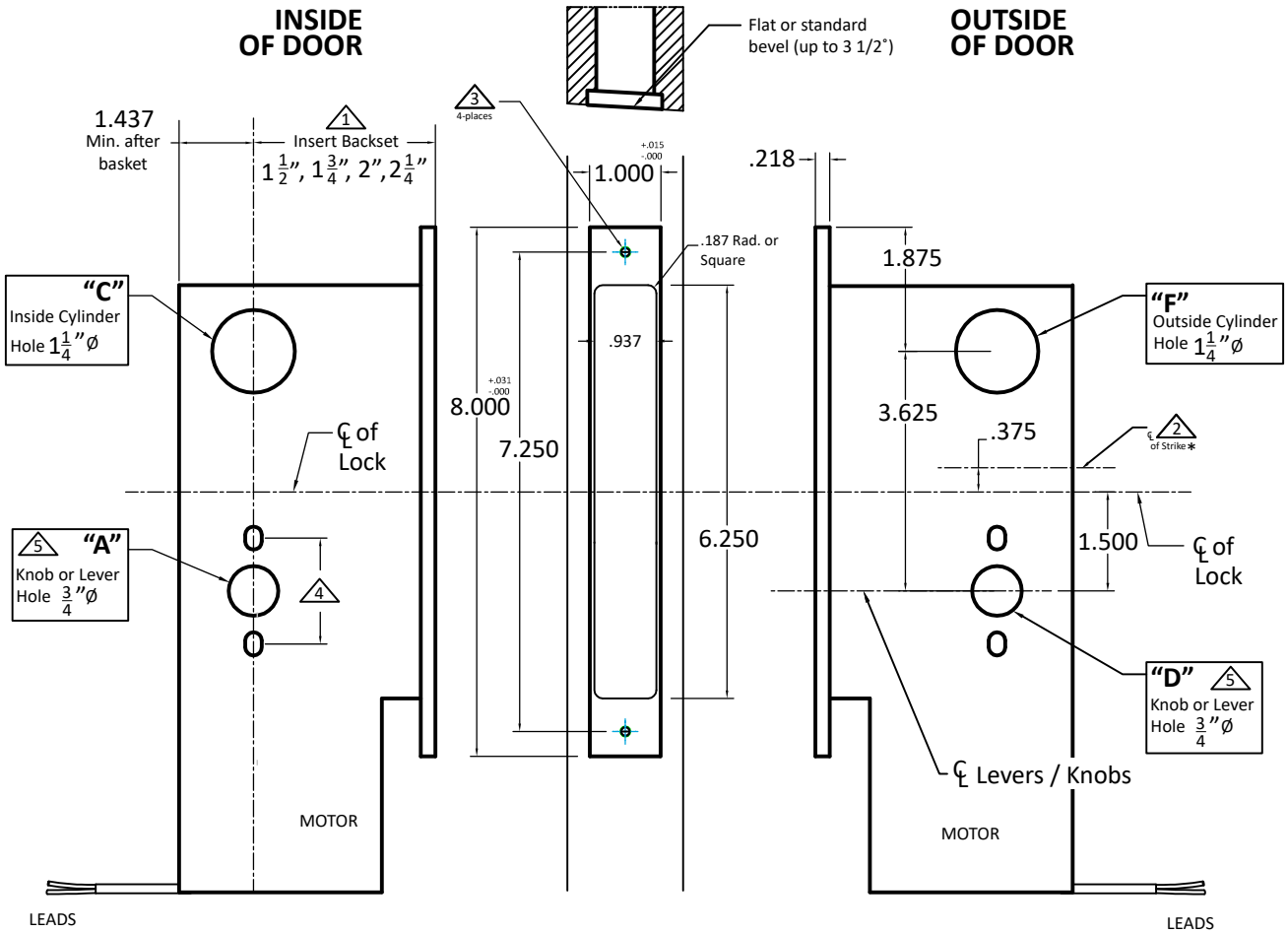


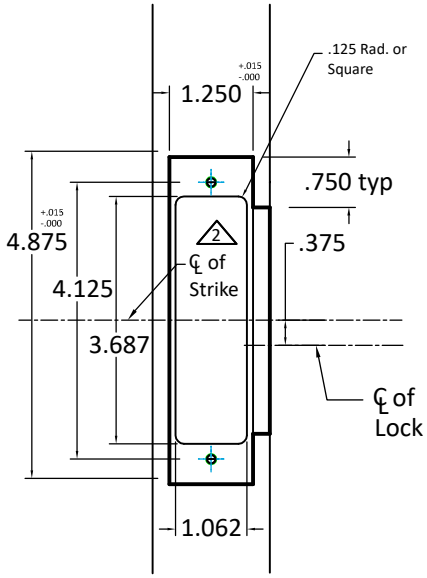


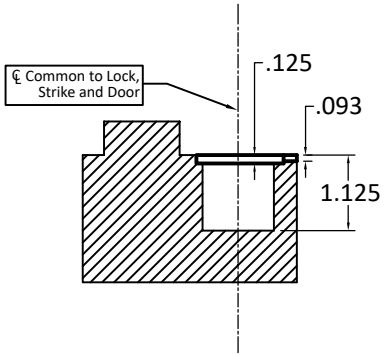


Important Notes:

1. Insert backset here 1 1/2", 1 3/4", 2", 2 1/4".
2. ASA strike mounted 3/8" ABOVE centerline of lock.
3. Prep for 12-24 machine screws (lock and strike.)
4. Through-bolting holes **ONLY** if required. See trim manufacturers' standard template for details. Accurate locks accomodate 1 1/2" to 1 11/16" center to centers and up to 1/4" dia. post. If there are any additional questions about through-bolting , please contact us.
5. Knob/Lever holes may vary from different trim manufacturers. Please refer to their templates to confirm dimensions.

| Functions | A | C | D | F |
|---|---|---|---|---|
| M8725ELR | ○ | | | ○ |
| M8758ELR | ○ | ● | ○ | ● |
| M8759ELR | ● | | ○ | ● |

● Required Holes
○ Optional Holes

ACCURATE
LOCK & HARDWARE
AMERICAN CRAFTED SINCE 1972

Additional Notes:

a) **Responsibility**: Door and frame manufacturers are responsible for providing adequate contruction or re-inforcement for proper intallation of hardware shown.
b) Please contact us for double lipped template if needed.
c) See spec sheets for additional lock details.

Standard M8700ELR for Hollow Metal Door - All Backsets

T-ALH.M8700ELR.HM