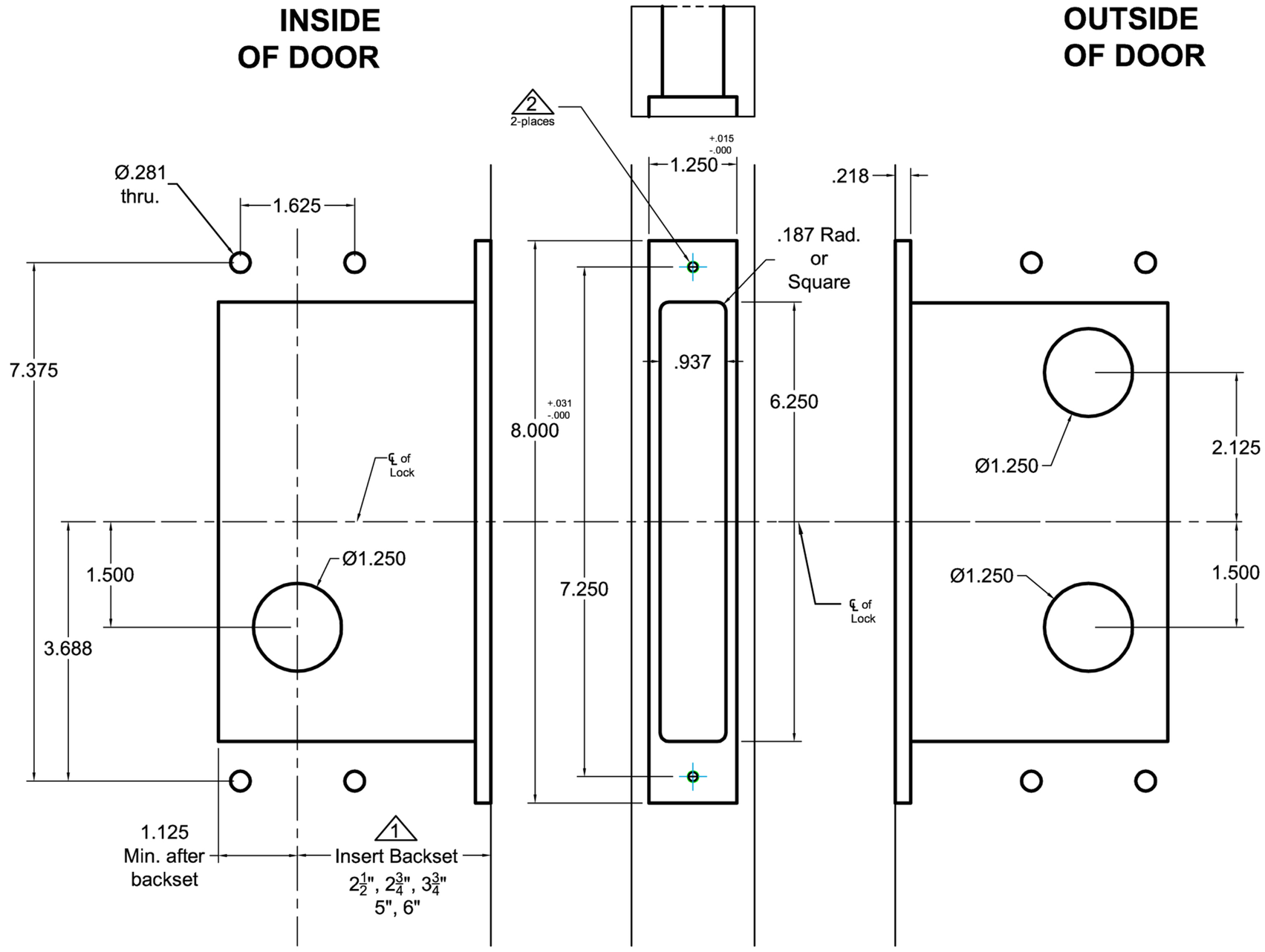

ACCURATE
LOCK & HARDWARE
AMERICAN CRAFTED SINCE 1972

Notes:

1. Insert backset here 2½", 2¾", 3¾", 5", or 6"
2. Prep for #12 wood or 12-24 machine screws

Additional Notes:

- a) **Responsibility**: Door and frame manufacturers are responsible for providing
- adequate construction or re-inforcement for proper installation of hardware shown.
- c) See catalog / spec sheets for additional lock details

9100ADAL-3ST.1E
All Backsets

T-ALH.9100ADAL-3ST.1E

P: 203.348.8865 W: accuratelockandhardware.com