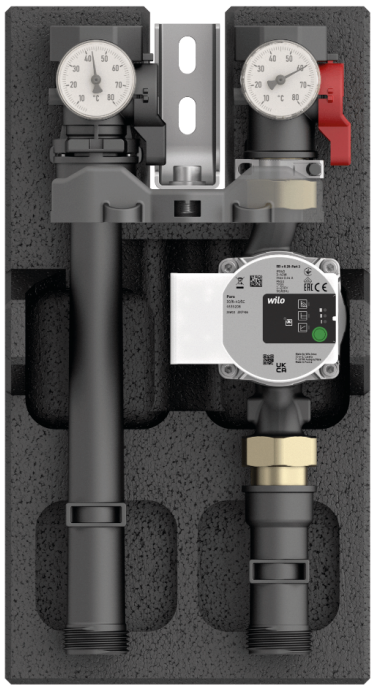

Heating pump assembly

Part no. 77337

Heating pump assembly

benefits

- pre-assembled, tightness-tested and heat-insulated assembly
- modular system with flow at left or right
- easy, fast mounting
- with high-efficiency pump class A
- eligible for heating optimization program (BAFA)

NEW

Application

Heating pump assembly for use in non-mixed heating circuits, specially for storage tank charging. It connects the heating boiler and the pipe system.

Description

Complete, pre-assembled and tightness-tested heating pump assembly made of high-grade polymer material with all required functional components, form-fit heat insulation and wall mounting unit.
The flow line consists of:
Shut-off valve with thermometer holder (red handle)
Thermometer flow (5 to 80 °C)
Plastic pipe for length compensation
Suitable for circulation pumps DN 20 with G1 x 130 mm
The return line consists of:
Shut-off valve with thermometer holder (black handle)
Thermometer return (5 to 80 °C)
Gravity brake
Plastic pipe for length compensation pump / mixer

Technical Specifications

Axis distance
90 mm

system connections
Boiler: G1 male
Heating circuit: G1 female

Operating temperature range
Medium: max. 60 °C at 6 bar,
max. 70 °C at 5 bar,
max. 90 °C at 3 bar

Nominal size
DN 20

Flow coefficient Kvs
5.7 m³/h

Heat insulation
Polypropylene EPP

Dimensions
W x H x D: 189 x 335 x 240 mm

Circulation pump
Wilo Para 15-130/6-43/SC-12

Length
130 mm

Degree of protection
IP 44 (EN 60529)

Supply voltage
AC 230 V, 50 Hz

Energy efficiency class
A

Power input
Wilo Para 15-130/6-43/SC-12
3 – 43 kW

pumping head
Wilo Para 15-130/6-43/SC-12
max. 6.7 m

pumping volume
Wilo Para 15-130/6-43/SC-12
max. 3.2 m³/h

Proportional pressure control
1

Constant pressure control
1

Fixed speed of rotation
1

Technical Drawings

PrimoTherm® C 130-1 with AFRISO pump

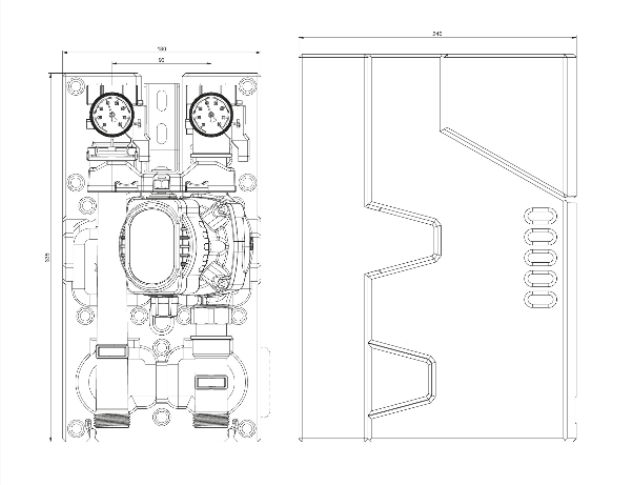

Dimensions (mm)

Versions

	opening temperature is reached	Pump		Part no.
Heating pump assembly		Wilo Para 15-130/6-43/ SC-12	●	77337

● in-stock items

○ Non-stock items