Heating pump assembly

Part no. 77342

Heating pump assembly

benefits

- pre-assembled, tightness-tested and heat-insulated assembly
- robust mixer with adjustable flow coefficient Kvs from 3.2 to 5.2 m³/h
- Adaptation of flow coefficient Kvs also possible during operation (under system pressure)
- eligible for heating optimization program (BAFA)

NEW

Application

Heating pump assembly for use in mixed heating circuits. With the 3-way mixer and the actuator, the flow temperature can be adjusted to a desired temperature by adding water from the return. The new mixer with adjustable flow coefficient Kvs offers the HVAC professional maximum flexibility in adapting the system to individual control requirements. This way, a great variety of mixer/pump assemblies can be covered with a single version.

Description

Complete, pre-assembled and tightness-tested heating pump assembly made of high-grade polymer materials with all required functional components, form-fit heat insulation.
The flow line consists of:
Shut-off valve with thermometer holder (red handle)
Thermometer flow (5 to 80 °C)
3-way mixing valve ARV KVS Vario with adjustable flow coefficient Kvs and ProClick adapter system
Maintenance-free, silent actuator ARM 343 (6 Nm, 120 s, AC 230 V) with 0/90° angle of rotation, indication for direction of rotation, selector key "Manual/Automatic Mode" and ProClick adapter system
Sensor clip for connection of a flow line sensor with Ø 6 mm
Suitable for circulation pumps DN 20 mit G1 x 130 mm.
The return line consists of:
Shut-off valve with thermometer holder (black handle)
Thermometer return (5 to 80 °C)
Gravity brake
Plastic piece for length compensation pump / mixer

Technical Specifications

Axis distance
90 mm

system connections
Boiler: G1 male
Heating circuit: G1 female

Operating temperature range
Medium: max. 60 °C at 6 bar,
max. 70 °C at 5 bar,
max. 90 °C at 3 bar

Nominal size
DN 20

Flow coefficient Kvs
adjustable: 3.2 (3.5) – 3.75 (4.5) – 4.6 (7) – 5.0 (8.5) – 5.2 (9) m^3/h
() = value adjusted at mixing valve

Leak rate
Mixing valve ARV KVS Vario: < 0.1 % of flow coefficient Kvs (up to Δp 0.5 bar < 0.2 % of flow coefficient Kvs)

Heat insulation
Polypropylene EPP

Dimensions
W x H x D: 189 x 335 x 240 mm

Circulation pump
Grundfos UPM3 Auto 15-70/130

Length
130 mm

Degree of protection
IP 44 (EN 60529)

Supply voltage
AC 230 V, 50 Hz

Energy efficiency class
A

Power input
Grundfos UPM3 Auto 15-70/130
5 – 52 kW

pumping head
Grundfos UPM3 Auto 15-70/130
max. 7 m

pumping volume
Grundfos UPM3 Auto 15-70/130
max. 3.75 m^3/h

Proportional pressure control
1

Constant pressure control
1

Fixed speed of rotation
1

Technical Drawings

PrimoTherm® C 130-2 with AFRISO pump

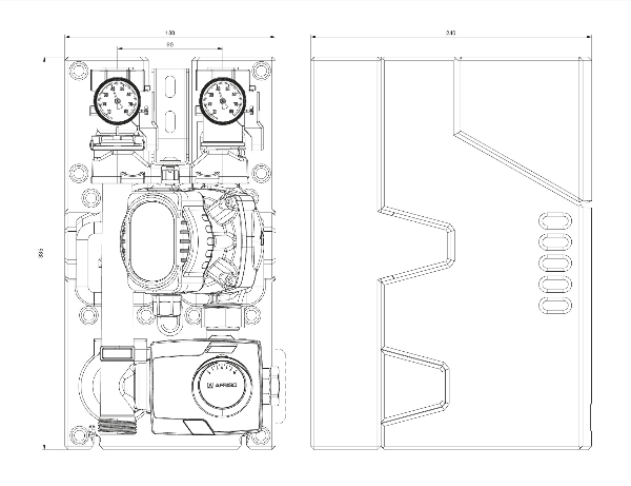

Dimensions (mm)

Versions

	opening temperature is reached	Pump		Part no.
Heating pump assembly		Grundfos UPM3 Auto 15-70/130	●	77342

● in-stock items

○ Non-stock items