Capsule pressure gauges for chemical applications KP63Ch

Part no. 35004412

Capsule pressure gauge for chemical applications type D4

benefits

- with zero correction
- robust stainless steel housing (with bayonet bezel)
- wetted parts and movement made of stainless steel
- GOSSTANDART-certified
- Ex version (optional)

Application

For corrosive gaseous and dry media, also for use in corrosive environments.

Technical Specifications

Type
D4

Nominal size
63

accuracy class (EN 837-3/6)
1.6

ranges (EN 837-3/5)
see ordering table

application area
static load: Full scale value
dynamic load: 0.9 x full scale value
overload safety: 1.3 x full scale value

Operating temperature range
Medium: max. 100 °C
Ambient: -20/+60 °C

Temperature performance
Indication error when the temperature of the measuring system deviates from the normal temperature of 20 °C:
at rising temperature approx. ± 0.6 %/10 K
falling temperature approx. ± 0.6 %/10 K
of full scale value

Degree of protection
IP 32 (EN 60529)

standard version

Connection
stainless steel 316 Ti/316 L, centre back

Measuring element
Capsule element, stainless steel 316 Ti/316 L

movement
Stainless steel

Zero correction
from the front

Seal
FKM (Viton)

Dial
Aluminium, white
Scaling: black

Pointer
Aluminium, black

Housing
Stainless steel 304

bayonet bezel
Stainless steel 304

window
D412
Laminated safety glass

Options

- back flange
- Panel mounting bezel
- 3-hole fixing, panel mounting bezel
- Ex version
- throttle screw
- special scales
- other process connections

Technical Drawings

Centre back connection

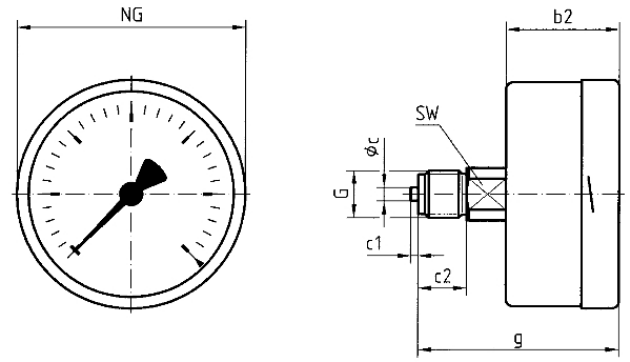

Dimensions (mm)

NG	b2	∅c	c1	c2	G	g	SW
63	37	5	2	13	G¼B	60	14
100	49	6	3	20	G½B	81	22
160	50	6	3	20	G½B	84	22

Versions

Range	Mounting type	Type		Part number
-25/+0 mbar	direct	KP63Ch D412	●	35004412

● in-stock items

● Non-stock items