# Capsule pressure gauges for chemical applications KP160Ch

## Part no. 35171412

## Capsule pressure gauge for chemical applications type D4

**benefits**

- with zero correction
- robust stainless steel housing (with bayonet bezel)
- wetted parts and movement made of stainless steel
- GOSSTANDART-certified
- Ex version (optional)

## Application

For corrosive gaseous and dry media, also for use in corrosive environments.

## Technical Specifications

**Type**
D4

**Nominal size**
160

**accuracy class (EN 837-3/6)**
1.6

**ranges (EN 837-3/5)**
see ordering table

**application area**
static load: Full scale value
dynamic load: 0.9 x full scale value
overload safety: 1.3 x full scale value

**Operating temperature range**
Medium: max. 100 °C
Ambient: -20/+60 °C

**Temperature performance**
Indication error when the temperature of the measuring system deviates from the normal temperature of 20 °C:
at rising temperature approx. ± 0.6 %/10 K
falling temperature approx. ± 0.6 %/10 K
of full scale value

**Degree of protection**
IP 32 (EN 60529)

### standard version

**Connection**
stainless steel 316 Ti/316 L, centre back

**Measuring element**
Capsule element, stainless steel 316 Ti/316 L

**movement**
Stainless steel

**Zero correction**
from the front

**Seal**
FKM (Viton)

**Dial**
Aluminium, white
Scaling: black

**Pointer**
Aluminium, black

**Housing**
Stainless steel 304

**bayonet bezel**
Stainless steel 304

**window**
D412
Laminated safety glass

## Options

- back flange
- Panel mounting bezel
- 3-hole fixing, panel mounting bezel
- Ex version
- throttle screw
- special scales
- other process connections

## Technical Drawings

**Centre back connection**

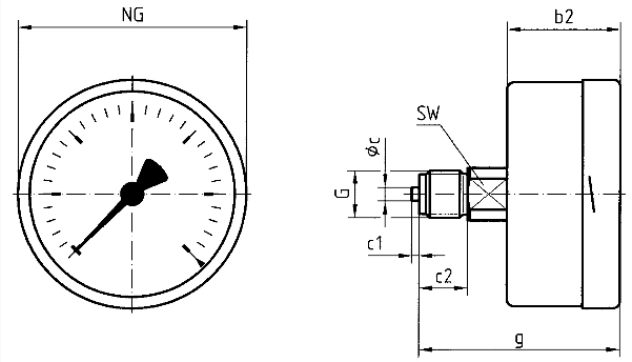


**Dimensions (mm)**

| NG | b2 | ∅c | c1 | c2 | G | g | SW |
|---|---|---|---|---|---|---|---|
| 63 | 37 | 5 | 2 | 13 | G¼B | 60 | 14 |
| 100 | 49 | 6 | 3 | 20 | G½B | 81 | 22 |
| 160 | 50 | 6 | 3 | 20 | G½B | 84 | 22 |

## Versions

| Range | Mounting type | Type | | Part number |
|---|---|---|---|---|
| 0/250 mbar | direct | KP160Ch<br>D412 | ● | 35171412 |

● in-stock items

● Non-stock items