Glycerine filled Bourdon tube pressure gauges RF63Gly

Part no. 85106611

Glycerine filled Bourdon tube pressure gauge type D6

benefits

- can be used in case of heavy vibrations and high, dynamic pressure loads
- longer service life due to less wear and corrosion protection of the measuring system
- No steaming up of the inside of the window in case of outdoor applications

Application

For gaseous and liquid media which are not highly viscous, do not crystallise and do not attack copper alloys. For measurements in areas with high vibration levels and high, dynamic pressure loads.

Technical Specifications

Type
D6

Nominal size
63

accuracy class (EN 837-1/6)
1.6

ranges (EN 837-1/5)
see ordering table

application area
static load: ¾ x full scale value
dynamic load: ⅔ x full scale value
short-term: Full scale value

Operating temperature range
Medium: max. 60 °C
Ambient: -20/+60 °C

Degree of protection
IP 54 (EN 60529) with housing vent (≤ 25 bar)

standard version

Connection
Brass, centre back

Measuring element
Bourdon tube, Copper alloy
≤ 60 bar: "C" type tube
> 60 bar: helical tube

movement
Brass

Dial
NG 63
Aluminium, white
Scaling: black

Pointer
NG 63
Aluminium, black

Housing
NG 63
Polyamide, black
with blow-out

crimped bezel
NG 63
Aluminium, black

window
NG 63
Plastic

filling liquid
glycerine (99.5 %)

Options

- Back flange (NG 63)
- clamp fixing (NG 50/63)
- 3-hole fixing, panel mounting bezel (NG 63)
- throttle screw
- special scales
- other process connections

Technical Drawings

NG 50/63 – centre back connection

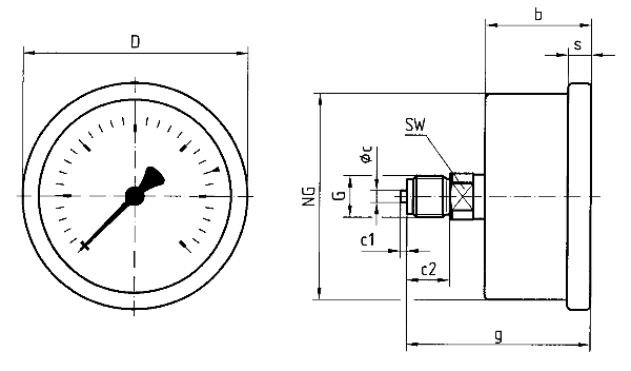

Dimensions (mm)

NG	b	∅c	c1	c2	D	G	g	s	SW
50	31,5	5	2	13	53	G¼B	54,5	5	14
63	32	5	2	13	68	G¼B	55	7	14

Versions

Range	Mounting type	Type		Part number
-1/+9 bar	direct	RF63Gly D611	●	85106611

● in-stock items

● Non-stock items