# Glycerine filled Bourdon tube pressure gauges RF63Gly

**Part no. 85110611**

**Glycerine filled Bourdon tube pressure gauge type D6**

**benefits**

- can be used in case of heavy vibrations and high, dynamic pressure loads
- longer service life due to less wear and corrosion protection of the measuring system
- No steaming up of the inside of the window in case of outdoor applications

## Application

For gaseous and liquid media which are not highly viscous, do not crystallise and do not attack copper alloys. For measurements in areas with high vibration levels and high, dynamic pressure loads.

## Technical Specifications

**Type**
D6

**Nominal size**
63

**accuracy class (EN 837-1/6)**
1.6

**ranges (EN 837-1/5)**
see ordering table

**application area**
static load: ¾ x full scale value
dynamic load: ⅔ x full scale value
short-term: Full scale value

**Operating temperature range**
Medium: max. 60 °C
Ambient: -20/+60 °C

**Degree of protection**
IP 54 (EN 60529) with housing vent (≤ 25 bar)

### standard version

**Connection**
Brass, centre back

**Measuring element**
Bourdon tube, Copper alloy
≤ 60 bar: "C" type tube
> 60 bar: helical tube

**movement**
Brass

**Dial**
NG 63
Aluminium, white
Scaling: black

**Pointer**
NG 63
Aluminium, black

**Housing**
NG 63
Polyamide, black
with blow-out

**crimped bezel**
NG 63
Aluminium, black

**window**
NG 63
Plastic

**filling liquid**
glycerine (99.5 %)

## Options

- Back flange (NG 63)
- clamp fixing (NG 50/63)
- 3-hole fixing, panel mounting bezel (NG 63)
- throttle screw
- special scales
- other process connections

## Technical Drawings

**NG 50/63 – centre back connection**

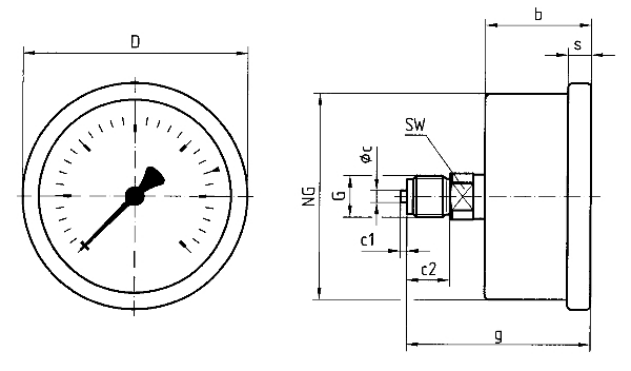


**Dimensions (mm)**

| NG | b | ∅c | c1 | c2 | D | G | g | s | SW |
|---|---|---|---|---|---|---|---|---|---|
| 50 | 31,5 | 5 | 2 | 13 | 53 | G¼B | 54,5 | 5 | 14 |
| 63 | 32 | 5 | 2 | 13 | 68 | G¼B | 55 | 7 | 14 |

## Versions

| Range | Mounting type | Type | | Part number |
|---|---|---|---|---|
| 0/1 bar | direct | RF63Gly D611 | ● | 85110611 |

● in-stock items

● Non-stock items