Bourdon tube pressure gauges for industrial applications RF100I

Part no. 85315301

Bourdon tube pressure gauges for industrial applications type D3

benefits

- for machine and plant engineering
- robust stainless steel housing
- many customised versions available

Application

For gaseous and liquid media which are not highly viscous, do not crystallise and do not attack copper alloys.
! For high measuring accuracy. For measuring gas or vapour, observe the table "Selection Criteria as per EN 837-2" (see appendix)!

Technical Specifications

Type
D3

Nominal size
100

accuracy class (EN 837-1/6)
1.0

ranges (EN 837-1/5)
see ordering table

application area
≤ 600 bar: Full scale value
> 600 bar: ¾ x full scale value
≤ 600 bar: 0.9 x full scale value
> 600 bar: ⅔ x full scale value
≤ 600 bar: 1.3 x full scale value
> 600 bar: Full scale value

Operating temperature range
Medium: max. 60 °C
Ambient: -20/+60 °C

Temperature performance
Indication error when the temperature of the measuring system deviates from the normal temperature of 20 °C:
at rising temperature approx. ± 0.4 %/10 K
falling temperature approx. ± 0.4 %/10 K
of full scale value

Degree of protection
IP 32 (EN 60529)

standard version

Connection
Brass, bottom

Measuring element
Bourdon tube
≤ 60 bar: "C" type tube, Copper alloy
> 60 bar: helical tube, stainless steel 316 Ti/316 L

movement
Brass

Dial
Aluminium, white
Scaling: black

Pointer
Aluminium, black

Housing
Stainless steel 304

window
Plastic, clipped in

Options

- throttle screw
- Reference pointer
- Electrical contacts
- special scales
- other process connections

Technical Drawings

Bottom connection

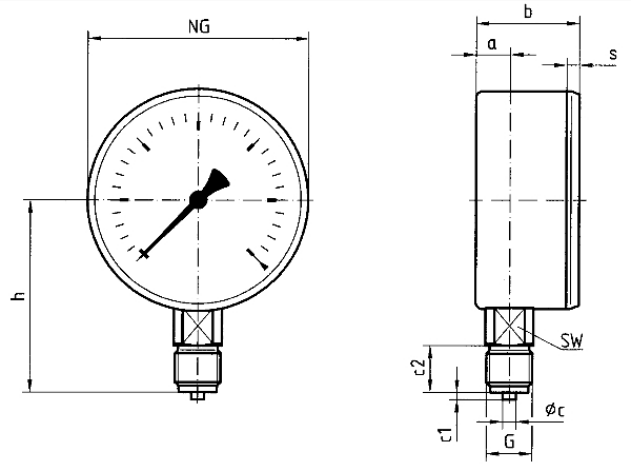

Dimensions (mm)

NG	a	b	∅c	c1	c2	G	h	s	SW
100	15,6	44	6	3	20	G½B	86	3,5	22

Versions

Range	Mounting type	Type		Part number
0/10 bar	direct	RF100I D301	●	85315301

● in-stock items

● Non-stock items