2026

Collection
Professional
Walls & Bases
Shower Doors

National Price List Canada

Effective August 2026

MAAX®

MOVING / forward

A better experience means always moving forward

We're inspired by you. You're constantly in motion, and never stop looking ahead. And your style is constantly evolving, helping refine the trends of tomorrow. That is why we believe to best serve you, we must always be moving forward — never complacent — finding new ways to enhance your success and enjoyment. We never stop asking questions or exploring innovative new opportunities to make business easier, products better and results more inspiring, no matter what the project. We are driven to continuously push the bounds, creating the best possible bathware experience.

YOU ARE
THE
BAT

MAAX

● FREESTANDING BATHTUBS - ACRYLIC

Ariosa 6032 ... 106266 ... 13
Ariosa 6636 ... 106267 ... 16
Elina ... 106389 ... 19
Ella Sleek ... 105744 ... 21
Fura 6732 ... 107826 ... 23
Fura Matte 6732 ... 107827 ... 25
Hatto 5932 ... 107835 ... 27
Hatto 6732 ... 107836 ... 29
Jazz F ... 105359 ... 31
Joan ... 106387 ... 33
Kuja 6732 ... 107832 ... 35
Oberto ... 106386 ... 37
Oberto 6032 ... 107845 ... 39
Ommu 5932 ... 107833 ... 41
Ommu 6732 ... 107834 ... 43
Optik 6032 F ... 105571 ... 45
Optik 6636 F ... 105742 ... 48
Renata 6731 ... 107173 ... 51
Tori 5932 ... 107828 ... 53
Tori 6732 ... 107830 ... 55
Tori Matte 5932 ... 107829 ... 57
Tori Matte 6732 ... 107831 ... 59
Tosca 5932 ... 106876 ... 61
Tosca 6732 ... 106878 ... 63
Tosca Matte 5932 ... 106877 ... 65
Tosca Matte 6732 ... 106879 ... 67
Valentina 6731 ... 107174 ... 69
Villi ... 106388 ... 71

● FREESTANDING BATHTUBS - ACRYLIC

Chorale 6030 ... 107675 ... 73
Chorale 6731 ... 107674 ... 75
Louie 5829 ... 106384 ... 77
Louie 6731 ... 106385 ... 79
Malibra 6730 ... 107678 ... 81
Mirella 6029 ... 107676 ... 83
Mirella 6729 ... 107677 ... 85
Nota 6731 ... 107679 ... 87
Sinfoni 5928 ... 107681 ... 89
Sinfoni 6729 ... 107680 ... 91

● FREESTANDING BATHTUBS - ACRYLIC

Lounge ... 105798 ... 93

● FREESTANDING BATHTUBS - ACRYLX

Brioso 6636 ... 103903 ... 95
Eldora 5832 ... 106992 ... 98
Eldora 6434 ... 106993 ... 100
Finlay ... 106997 ... 102
Fontana ... 106994 ... 104
Golan 5829 ... 107519 ... 106
Golan 6429 ... 107520 ... 108
Pocono ... 106995 ... 110
Sonoma ... 106996 ... 112

● FREESTANDING BATHTUBS - ACRYLX

Delsia 6032 ... 106192 ... 114
Delsia 6636 ... 106193 ... 116
Sax ... 105797 ... 118

● RECTANGULAR BATHTUBS - ACRYLIC

Aiiki 6636 ... 102787 ... 120
Aiiki 7236 ... 102786 ... 122
Aiiki 7242 ... 102785 ... 124
Baccarat ... 102945 ... 126
ModulR 6032 - Corner left ... 410008 ... 129
... 410011 ... 129
ModulR 6032 - Corner right ... 410007 ... 131
... 410010 ... 131
ModulR 6032 IF - Alcove ... 410021 ... 133
... 410022 ... 133
ModulR 6032 - Drop-in ... 410023 ... 133
... 410024 ... 133
ModulR 6032 - Wall-Mount ... 410009 ... 136
... 410012 ... 136
ModulR 6032 IF - Corner left ... 410027 ... 138
... 410028 ... 138
ModulR 6032 IF - Corner right ... 410025 ... 140
... 410026 ... 140
Optik 6032 ... 101265 ... 142
Optik 6636 ... 101269 ... 145
Optik 6636 C ... 105743 ... 148
Optik 7236 ... 101270 ... 150
Optik 7242 ... 101275 ... 153
Release 6032 ... 105310 ... 156
Release 6036 ... 105311 ... 159

● RECTANGULAR BATHTUBS - ACRYLIC

Exhibit 6030 IFS AFR ... 105511 ... 162
Exhibit 6030 IFS ... 105519 ... 162
Exhibit 6030 IFS AFR DTF ... 105546 ... 165
Exhibit 6030 IFS DTF ... 105547 ... 165
Exhibit 6032 ... 105513 ... 167
Exhibit 6032 IF ... 105514 ... 167
Exhibit 6032 IF DTF ... 105550 ... 170
Exhibit 6032 IFS AFR ... 105512 ... 173
Exhibit 6032 IFS ... 105520 ... 173
Exhibit 6032 IFS AFR DTF ... 105548 ... 176
Exhibit 6032 IFS DTF ... 105549 ... 176
Exhibit 6036 ... 106170 ... 179
Exhibit 6036 IF ... 106171 ... 182
Exhibit 6036 IF DTF ... 106227 ... 185
Exhibit 6036 IFS ... 106172 ... 188
Exhibit 6036 IFS AFR ... 106173 ... 188
Exhibit 6036 IFS DTF ... 106228 ... 191
Exhibit 6036 IFS AFR DTF ... 106229 ... 191
Exhibit 6042 ... 106250 ... 194
Exhibit 6042 IF ... 106174 ... 197
Exhibit 6042 IF DTF ... 106230 ... 200
Exhibit 6042 IFS ... 106175 ... 203
Exhibit 6042 IFS AFR ... 106176 ... 203

Exhibit 6042 IFS DTF 106231 206
Exhibit 6042 IFS AFR DTF 106232 206
Exhibit 6632 IF 106220 209
Exhibit 6632 IF DTF 106233 212
Exhibit 6632 IFS 106221 215
Exhibit 6632 IFS AFR 106222 215
Exhibit 6632 IFS DTF 106234 218
Exhibit 6632 IFS AFR DTF 106235 218
Exhibit 6634 106219 221
Exhibit 6636 106177 224
Exhibit 6636 IF 106178 227
Exhibit 6636 IF DTF 106236 230
Exhibit 6636 IFS 106179 233
Exhibit 6636 IFS AFR 106180 233
Exhibit 6636 IFS DTF 106237 236
Exhibit 6636 IFS AFR DTF 106238 236
Exhibit 7232 IF 106224 239
Exhibit 7232 IF DTF 106239 242
Exhibit 7232 IFS 106225 245
Exhibit 7232 IFS AFR 106226 245
Exhibit 7232 IFS DTF 106240 248
Exhibit 7232 IFS AFR DTF 106241 248
Exhibit 7234 106223 251
Exhibit 7236 106181 254
Exhibit 7236 IF 106182 257
Exhibit 7236 IF DTF 106242 260
Exhibit 7236 IFS 106183 263
Exhibit 7236 IFS AFR 106184 263
Exhibit 7236 IFS DTF 106243 266
Exhibit 7236 IFS AFR DTF 106244 266
Exhibit 7242 106185 269
Exhibit 7242 IF 106186 272
Exhibit 7242 IF DTF 106245 275
Exhibit 7242 IFS 106187 278
Exhibit 7242 IFS AFR 106188 278
Exhibit 7242 IFS DTF 106246 281
Exhibit 7242 IFS AFR DTF 106247 281
Pose 6030 - Corner left 106199 284
Pose 6030 - Corner right 106200 284
Pose 6030 101456 287
Pose 6030 IF 106198 287
Pose 6032 - Corner left 106202 290
Pose 6032 - Corner right 106203 290
Pose 6032 101457 293
Pose 6032 IF 106201 293
Pose 6632 - Corner left 106205 296
Pose 6632 - Corner right 106206 296
Pose 6632 101458 299
Pose 6632 IF 106204 299
Pose 6636 - Corner left 106208 302
Pose 6636 - Corner right 106209 302
Pose 6636 101459 305
Pose 6636 IF 106207 305
Pose 7236 - Corner left 106211 308
Pose 7236 - Corner right 106212 308
Pose 7236 101460 311
Pose 7236 IF 106210 311
Pose 7242 - Corner left 106214 314
Pose 7242 - Corner right 106215 314
Pose 7242 101461 317
Pose 7242 IF 106213 317
Rubix 6030 105815 320
Rubix 6030 AFR 105816 320
Rubix 6030 DTF 105817 322
Rubix 6030 AFR DTF 105818 322
Rubix 6032 AFR 105704 324
Rubix 6032 105705 324
Rubix 6032 DTF 105819 326
Rubix 6032 AFR DTF 105820 326
Rubix 6632 AFR 105734 328
Rubix 6632 105735 328
Rubix Access 6030 106348 330
Rubix Access 6030 AFR 106349 330
Vichy 6032 IFS 102941 332

RECTANGULAR BATHTUBS - ACRYLX

Mackenzie 6030 AFR 106664 335
Mackenzie 6030 106665 335
Mackenzie 6032 AFR 106668 337
Mackenzie 6032 106669 337
Mackenzie Corner 6030 106811 339
Mackenzie Corner 6030 AFR 106812 339
Mackenzie Corner 6032 106813 341
Mackenzie Corner 6032 AFR 106814 341
Mackenzie Corner Access 6030 106815 343
Mackenzie Corner Access 6030 AFR 106816 343
TOF-3060 145008 345
TOF-3060 AFR 145009 345
TOF-3260 145014 347
TOF-3260 AFR 145015 347

OVAL BATHTUBS - ACRYLIC

Aigo 102788 349
Calla 6642 100075 351
Eterne 7236 101317 354
Eterne 7242 101318 357
Jazz (Drop-in) 105509 360
Living 6042 102863 362
Living 6636 102761 365
Living 6642 102865 368
Living 7236 102759 371
Living 7242 102757 374

OVAL BATHTUBS - ACRYLIC

Islander AFR 102895 377
Islander AFR DTF 102784 380
Vichy 6034 102939 383

CORNER BATHTUBS - ACRYLIC

Tandem 5454 100875 386
Tandem 6060 101077 389
Tandem II 6060 100054 392

Tryst 100053 395
Vichy 5555 ..... 102934 398
Vichy 6043 ASY 102937 401
Vichy 6060 ..... 102579 404

CORNER BATHTUBS - ACRYLX

VO5050 5 ft 140111 407

TUB SHOWERS 410

TUB SHOWERS - ACRYLIC

Allia Access TS-6032 (1-Piece) 107009 410
Allia Access TS-6032 (2-Piece) 107009S 410
Allia Access TSR-6032 (1-Piece) 107008 414
Allia Access TSR-6032 (3-Piece) 107008S 414
Allia TS-6032 (1-piece) 107001 418
Allia TS-6032 (2-piece) 107001S 418
Allia TSR-6032 (1-piece) 107000 423
Allia TSR-6032 (3-piece) 107000S 423

TUB SHOWERS - ACRYLX

BG6034C 140001 428
Icon TS6030 ..... 107158 430
Icon TS6032 ..... 107157 433
Icon TS6032X AFR 107164 433
Icon TS6036 ..... 107162 436
Icon TS6036X AFR 107168 436
KDTS 3060 ..... 145006 438
KDTS 3060 AFR 145007 438
KDTS 3260 ..... 145012 441
KDTS 3260 AFR 145013 441
TSEA Plus 105674 444
TSEA62 ..... 140100 447
TSEA72 ..... 140103 449
TSO6042 ..... 140105 451
TSTEA Plus 105930 453

SHOWERS 457

ALCOVE SHOWERS - ACRYLIC

Stamina 48-I (1-piece) 101139 457
Stamina 60-I (1-piece) 101141 459

ALCOVE SHOWERS - ACRYLIC

Allia SH-3636 (1-piece) 107007 461
Allia SH-3636 (2-piece) 107007S 461
Allia SH-4834 (1-piece) 107005 464
Allia SH-4834 (2-piece) 107005S 464
Allia SH-6034 (1-piece) 107003 468
Allia SH-6034 (2-piece) 107003S 468
Allia SHR-3636 1-piece 107006 473
Allia SHR-3636 (3-piece) 107006S 473
Allia SHR-4834 (1-piece) 107004 476
Allia SHR-4834 (3-piece) 107004S 476
Allia SHR-6034 (1-piece) 107002 480
Allia SHR-6034 (3-piece) 107002S 480

ALCOVE SHOWERS - ACRYLX

Biarritz 40 ..... 100959 484
Biarritz 80 ..... 100971 486
Biarritz 85 ..... 100973 488
Icon SH 4834 ..... 107426 490
Icon SH 4834X AFR 107427 493
Icon SH 6036 ..... 107167 496
Icon SH 6036X AFR 107161 499
Icon SH3636 ..... 107159 502
Icon SH3636X AFR 107636 504
Icon SH4836 ..... 107160 506
Icon SH4836X AFR 107166 509
Icon SH6030 ..... 107659 512
Icon SH6030X AFR 107662 514
Icon SH6032 ..... 107660 516
Icon SH6032X AFR 107663 519
Icon SH6034 ..... 107661 522
Icon SH6034X AFR 107664 525
KDS 3060 ..... 145036 528
KDS 3060 AFR 145037 528
KDS 3232 ..... 145018 531
KDS 3232 AFR 145019 531
KDS 3448 ..... 145030 534
KDS 3448 AFR 145031 534
KDS 3460 ..... 145042 537
KDS 3460 AFR 145043 537
KDS 3636 ..... 145024 540
KDS 3636 AFR 145025 540
SS32 ..... 140085 543
SS3260 ..... 107106 545
SS3648 R/L 140087 547
SS3660 ..... 140088 549
SS3660 R/L 102676 551
SST3648 ..... 140546 553
SST3660 ..... 140093 555

CORNER SHOWERS - ACRYLIC

Freestyle 37 Neo-angle (1-Piece) 102994 557
Freestyle 37 Neo-angle (2-piece) 102994S 557
Freestyle 37 Neo-round (1-piece) 102995 559
Freestyle 37 Neo-round (2-piece) 102995S 559
Freestyle 37 Round (1-piece) 102996 561
Freestyle 37 Round (2-piece) 102996S 561
Freestyle 40 Neo-angle (1-piece) 102997 563
Freestyle 40 Neo-angle (2-piece) 102997S 563
Freestyle 40 Neo-round (1-piece) 102998 565
Freestyle 40 Neo-round (2-piece) 102998S 565
Freestyle 40 Round (1-piece) 102999 567
Freestyle 40 Round (2-piece) 102999S 567

CORNER SHOWERS - ACRYLIC

Brio II 102498 569
Novello II 102492 571

CORNER SHOWERS - ACRYLX

CSS36 ..... 140007 573
CSS40 ..... 140009 575
Galaxie II 105222 577
Imperial II 105219 579
SECCSS36 ..... 140079 581

SHOWER BASES 584

● CONFIGURABLE SHOWER BASES

B3Round 3636 ..... 410000 584
B3Round 4236 ..... 410034 586
B3Round 4832 ..... 410001 588
B3Round 4834 ..... 410002 590
B3Round 4836 ..... 410003 592
B3Round 4842 ..... 410043 594
B3Round 6030 ..... 410004 596
B3Round 6032 ..... 410005 598
B3Round 6034 ..... 410035 600
B3Round 6036 ..... 410006 602
B3Round 6042 ..... 410036 604
B3Square 3636 ..... 420000 606
B3Square 4236 ..... 420034 608
B3Square 4832 ..... 420001 610
B3Square 4834 ..... 420002 613
B3Square 4836 ..... 420003 616
B3Square 4842 ..... 420043 618
B3Square 6030 ..... 420004 620
B3Square 6032 ..... 420005 623
B3Square 6034 ..... 420035 626
B3Square 6036 ..... 420006 629
B3Square 6042 ..... 420036 632
B3Square 7236 ..... 420042 634
B3X 3636 - Alcove 420020 636
B3X 3636 - Corner 420021 638
B3X 4236 - Alcove 420039 640
B3X 4236 - Corner 420040 642
..... 420041 642
B3X 4836 - Alcove 420030 645
B3X 4836 - Corner 420028 647
..... 420029 647
B3X 6032 - Alcove 420022 650
..... 420023 650
B3X 6032 - Corner 420024 653
..... 420025 653
B3X 6036 - Alcove 420031 656
B3X 6036 - Corner 420032 658
..... 420033 658

● SHOWER BASES - NATURAL STONE

Fossil 6036 Base 106881 661

● CORNER BASES - ACRYLIC

Neo-angle Base 36 - 3 in 101422 663
Neo-angle Base 38 - 3 in 101423 665
Neo-angle Base 40 - 3 in 101424 667
Neo-angle Base 42 - 3 in 101425 669
Neo-round Base 32 - 3 in 101426 671
Neo-round Base 36 - 3 in 101427 673
Neo-round Base 40 - 3 in 101428 675
Rectangular Base 6036 - Corner L/R - 3 in. 105594 677
Roka 3232 ..... 107331 679
Roka 3636 ..... 107332 681
Roka 4242 ..... 107333 683
Round Base 36 - 3 in 101429 685
Square Base 32 - Corner - 3 in 101431 687
Square Base 36 - Corner - 3 in 101432 689

● ALCOVE BASES - ACRYLIC

Rectangular Base 4234 - 3 in 102001 691
Rectangular Base 4236 - 3 in. 105718 693
Rectangular Base 4832 - 3 in 101433 695
Rectangular Base 4834 - 3 in 102002 697
Rectangular Base 4836 - 3 in 105717 699
Rectangular Base 6030 - 3 in 105707 701
Rectangular Base 6032 - 3 in 105706 703
Rectangular Base 6034 - 3 in 102003 705
Rectangular Base 6036 - 3 in 105664 707
Rectangular Base 6036 - R/L Drain - 3 in. 105666 707
Rectangular Base 6042 - 3 in 105716 709
Square Base 32 - Alcove - 3 in 105663 711
Square Base 36 - Alcove - 3 in 101430 713
Square Base 42 - Alcove - 3 in 105714 715

● ALCOVE BASES - ACRYLX

SPL 3232 ..... 145020 717
SPL 3232 AFR 145021 717
SPL 3636 ..... 145026 719
SPL 3636 AFR 145027 719
SPS 3060 ..... 145038 721
SPS 3060 AFR 145039 721
SPS 3448 ..... 145032 723
SPS 3448 AFR 145033 723
SPS 3460 ..... 145044 725
SPS 3460 AFR 145045 725

● SHOWER BASES - SOLID SURFACE

Stonea 4832 Shower Base 107912 727
Stonea 4836 Shower Base 107913 729
Stonea 6032 Shower Base 107914 731
Stonea 6036 Shower Base 107915 733

BARRIER FREE 736

● ALCOVE SHOWERS - ACRYLIC

Outlook BFS-6036A (1-Piece) 107720 736
Outlook BFS-6036A (3-Piece) 107721 739

● ALCOVE SHOWERS - ACRYLIC

Acolyte 6238 - Center drain 108258 742

● ALCOVE SHOWERS - ACRYLX

Outlook BFS-48F 105088 745
Outlook BFS-6036F 105089 748
Outlook BFS-60F 105247 751

● ALCOVE SHOWERS - ACRYLX

Acolyte 6238 - Linear drain 108259 754

● ALCOVE BASES - ACRYLIC

Acolyte 6238 - Center drain 107933 757

● ALCOVE BASES - ACRYLX

Outlook Base 4836 ..... 106687 759
Outlook Base 6030 C 106630 761

Outlook Base 6030 L/R 106856 763
Outlook Base 6036 ..... 106631 765
Outlook Base 6238 ..... 106857 767

● **ALCOVE BASES - ACRYLX**

Acolyte 6238 - Linear drain 108238 769

WALLS **771**

● **VERSALINE**

Wall Kits - Alcove Shower - Subway 107180 771
..... 107182 771
Wall Kits - Alcove Shower - Vertical 107181 772
..... 107183 772

● **DENSO**

Denso 36 in. Wall Kit - Modern Subway 107223 773
Denso 42 in. Wall Kit - Modern Subway 107224 773
Denso 36 in. Wall Kit - Traditional Subway 107227 774
Denso 42 in. Wall Kit - Traditional Subway 107228 774
Denso 50 in. Back Wall - Modern Subway 107226 775
Denso 50 in. Back Wall - Traditional Subway 107230 775
Denso 62 in. Back Wall - Modern Subway 107225 776
Denso 62 in. Back Wall - Traditional Subway 107229 776

● **NEXTILE**

NexTile 6030 Tub Wall Kit 106542 777
NexTile 6032 Shower Wall Kit 107352 779

● **UTILE**

Wall Kits - Tub 103408 781
Single Back Walls 103412 784
..... 103416 783
..... 103421 783
..... 103422 786
Single Side Walls 103415 789
..... 103419 789
Wall Kits - Alcove Shower 107459 792
..... 107460 792
..... 107463 793
..... 107464 793
..... 107479 793
Wall Kits - Corner Shower 103388 796
..... 107461 796
..... 107462 796
..... 107465 797
..... 107466 797
Wall Kits - Tub 103418 800
..... 103424 800

● **ACRYLIC WALLS**

Back wall - 32x72 in. 105068 803
Back wall - 36x72 in. 105069 803
Back wall - 42x72 in. 105070 803
Back wall - 48x72 in. 105071 803
Back wall - 60x72 in. 105072 803
Wall set (2 walls) 30x72 in. 105062 805
Wall set (2 walls) 32x72 in. 105063 805
Wall set (2 walls) 36x72 in. 105064 805
Wall set (2 walls) 38x72 in. 105065 805
Wall set (2 walls) 40x72 in. 105066 805
Wall set (2 walls) 42x72 in. 105067 805

● **POLYSTYRENE WALLS**

Effika 6030 ..... 106697 807

● **ACRYLX WALLS**

Acolyte 6238 Four-piece Wall Kit 108257 809

SHOWER DOORS **812**

● **ALCOVE DOORS - BYPASS**

Duel Alto Shower Doors 136955 812
..... 136956 812

● **ALCOVE DOORS - BYPASS**

Kameleon SC Shower Doors - 6 mm 134662 816
..... 134663 818
..... 134664 816
..... 134665 814
Kameleon SC Shower Doors - 8 mm 134674 820
..... 134675 820
Kameleon Shower Doors - 6 mm 134562 825
..... 134563 822
..... 134564 825
..... 134565 822
Kameleon Shower Doors - 8 mm 134571 827
..... 134572 827

● **ALCOVE DOORS - BYPASS**

Duel Shower Doors 136271 829
..... 136272 829
Incognito 70 Shower Doors - 6 mm 139349 831
..... 139350 831
Incognito 70 Shower Doors - 8 mm 139352 833
..... 139353 833
Incognito 74 Shower Doors - 8 mm 138520 835
..... 138521 835
Incognito 76 Shaker Shower Doors 135331 837
..... 135332 837
Incognito 76 Shower Doors - 8 mm 135334 839
..... 135335 839
Incognito 76 Smoke Shower Doors 136335 841
Inverto Shower Doors 138761 843
..... 138762 843
Polar Shower Doors 105412 845
..... 105413 845
Revelation Round Shower Doors - 6 mm 136690 846
..... 136691 846
Revelation Round Shower Doors - 8 mm 136693 848
..... 136694 848
Revelation Square Shower Doors - 6 mm 135690 850
..... 135691 850
Revelation Square Shower Doors - 8 mm 135693 852
..... 135694 852
Uptown Shower Doors 135321 854
Uptown Bypass Shower Doors 135322 854

● ALCOVE DOORS - SLIDING

Nebula Shower Doors 135870 856
..... 135875 856
Vela Shower Doors 138460 858
..... 138470 858
Vela Shower Doors with Towel Bar 138465 860
..... 138475 860

● ALCOVE DOORS - SLIDING

Connect Pro Shower Doors 135235 862
..... 135236 862
..... 135238 862
Halo Pro GS Shower Doors 138540 864
..... 138541 864
Halo Pro Shower Doors 138950 866
..... 138952 866
Halo Pro TB Shower Doors 138954 868
..... 138956 868

● ALCOVE DOORS - SLIDING

Halo Shower Doors 138996 870
..... 138997 870
Luminescence Shower Doors 138992 872
Odyssey SC Shower Doors 137420 874
..... 137421 874
Uptown Slider Shower Doors 135323 876
..... 135324 876

● ALCOVE DOORS - PIVOT

Capella Shower Doors 139584 878
..... 139586 878
..... 139587 878
ModulR 2 Shower Doors 137933 880
..... 137935 880
..... 137937 880
ModulR Alcove Shower Doors 137832 882
..... 137833 882
..... 137835 882
..... 137836 882
ModulR Wall-Mounted Shower Doors 137863 884
..... 137864 884
..... 137865 884
..... 137873 884
..... 137874 884

● ALCOVE DOORS - PIVOT

Madono Shower Doors 105416 886
..... 105417 886
..... 105418 886
..... 105420 886
Manhattan 1 Panel Shower Doors 138260 888
..... 138261 888
..... 138262 888
..... 138263 888
..... 138264 889
..... 138265 889
Manhattan 2 Panel Shower Doors 138266 891
..... 138267 891
..... 138268 891
..... 138269 891
..... 138270 892
..... 138271 892
..... 138272 892
..... 138273 892
..... 138274 892
..... 138275 892
..... 138276 892
..... 138277 893
Pivolok Deluxe Shower Doors 136435 895
Pivolok Shower Doors 136605 896
..... 136615 896
..... 136625 896
..... 136626 896
..... 136635 896
..... 136645 896
..... 136655 896
..... 136656 896
Polar Shower Doors 136730 899
..... 136731 899
..... 136732 899
..... 136733 899
Reveal 71 Shower Doors 136671 901
..... 136672 901
..... 136676 901
..... 136677 901
..... 136679 901
..... 136883 901
Reveal Sleek 71 Shower Doors 139575 904
..... 139576 904
..... 139577 904
..... 139578 904
..... 139579 904
..... 139580 905
Uptown Pivot Shower Doors 135325 907
..... 135326 907

● SCREENS

Edge Duo Shower Screen 137504 909

● RETURN PANELS

Capella Return Panels 139588 911
..... 139590 911
Duel Alto Return Panels 139953 913
..... 139954 913
Nebula Return Panel 135865 915

● RETURN PANELS

Connect Pro Return Panels 135239 917
..... 135240 917
Halo Pro GS Return Panels 136542 919
..... 136543 919

● RETURN PANELS

Duel and Inverto Return Panels 137310 921
..... 137311 921
..... 137312 921
Halo Return Panels 139393 923
..... 139394 923
..... 139395 923
..... 139396 923
..... 139998 923
Incognito 76 Return Panels 136560 926
Odyssey SC Return Panel 137422 926
Odyssey SC Return Panel 36 x 78 - 8 mm 137423 929
Reveal 71 Return Panels 136673 931
..... 136674 931
..... 136675 931
Reveal Sleek 71 Return Panels 139581 932
..... 139582 932
..... 139583 932
Uptown Return Panels 135327 934
..... 135328 934

● RETURN PANELS

Incognito 76 Return Panels 136561 936

● CORNER DOORS - SLIDING

Halo Pro 60 x 32 x 78 3/4 - 8mm 134951 938
Halo Pro Corner 134950 939
..... 134952 939
..... 134955 939
Halo Pro Corner With Towel Bar 134954 941
..... 134957 941
Halo Pro TB 48 x 36 x 78 3/4 - 8mm 134956 943
Halo Pro TB 60 x 32 x 78 3/4 - 8mm 134953 944

● CORNER DOORS - SLIDING

Halo Round 139399L 945
..... 139399R 945
Odyssey SC Enclosure 48 x 32 x 78 - 8mm 107545 947
Odyssey SC Enclosure 60 x 32 x 78 - 8mm 107546 949
Radia Neo-angle 137440 951
..... 137442 951
Radia Neo-round 137443 953
..... 137444 953
..... 137445 953
..... 137449 953
Radia Round 137446 955
Radia Square 137447 957
..... 137448 957
..... 137451 957

● CORNER DOORS - PIVOT

ModulR Corner Shower Doors 137856 959
..... 137857 959
..... 137858 959
..... 137859 959
..... 137869 959
..... 137870 959

● CORNER DOORS - PIVOT

Link Curve Neo-angle 137280 961
..... 137281 961
Link Curve Rectangular 133302 963
Link Neo-angle 136315 965
..... 136321 965
Link Rectangular 136330 967

● CORNER DOORS - PIVOT

Manhattan Square 3636 ..... 135230 969
Radia Neo-angle 137441 971
Silhouette Neo-angle 137901 973
..... 137904 973
Silhouette Plus Neo-angle 137710 975
..... 137720 975
..... 137730 975
..... 137750 975

TUB DOORS 978

● SCREENS

Edge Access Tub Screen 137600 978
Edge Duo Tub Screen 137502 980
Edge Square Tub Screen 137501 982
Edge Tub Screen 137500 984

● TUB DOORS - SLIDING

Vela Tub Door 138480 986
Vela Tub Door with Towel Bar 138485 988

● TUB DOORS - SLIDING

Halo Tub Door 139398 990

● TUB DOORS - BYPASS

Kameleon SC Tub Door - 8 mm 134670 991
Kameleon SC Tub Doors - 6 mm 134660 993
..... 134661 995
Kameleon Tub Door - 8 mm 134573 997
Kameleon Tub Doors - 6 mm 134560 1001
..... 134561 999

● TUB DOORS - BYPASS

Duel Tub Door 136270 1003
Incognito 57 Shaker Tub Door 135330 1005
Incognito 57 Tub Door - 6 mm 139351 1007
Incognito 57 Tub Doors - 8 mm 138522 1009
..... 139354 1011
Inverto Tub Door 138760 1013
Mika Tub Door 105409 1015
Polar Tub Door 105410 1017
Revelation Round Tub Door - 6 mm 136692 1017
Revelation Round Tub Door - 8 mm 136695 1018
Revelation Square Tub Door - 6 mm 135692 1020
Revelation Square Tub Door - 8 mm 135695 1022
Uptown Bypass Tub Door 135320 1024

VANITIES 1027

● VANITIES - FREESTANDING

Azaria 30 in. Vanity 108266 1027

Celestine 30 in. Vanity 108267 1029
Opaline 30 in. Vanity 108264 1031
Opaline 48 in. Vanity 108265 1033
Urba 36 in. Vanity 107766 1035
Urba 48 in. Vanity 107767 1037
Vanuria 30 in. Vanity 107763 1039
Vanuria 48 in. Vanity 107764 1041
Vanuria 72 in. Vanity 107765 1043

● VANITIES - FLOATING

Zidea 48 in. Vanity 107768 1045
Zidea 60 in. Vanity 107769 1047

ACCESSORIES 1050

● SHELVES

Manhattan Corner Shelf with Glass 10042818 1050
Manhattan Long Shelf 107654 1052
..... 107655 1052
Manhattan Rectangular Shelf with Glass 10042819 1054
Manhattan Rectangular Shelf with Soap Tray 10045084 1056

● TOWEL BARS

Manhattan 18 in. Single Towel Bar 10045088 1058
Manhattan 24 in. Double Towel Bar 10045087 1060
Manhattan Hand Towel Holder 10045081 1062
Manhattan Vertical Hand Towel Holder 10045082 1064

● FAUCETS

Keros Deckmounted Tub Faucet 10045541 1066
Linosa Freestanding Tub Faucet 10045542 1068

● TRIMS

Manhattan Trim 94 in. 107637 1070

● SEATS

Arched Teak Shower Seat 48 ..... 10045579 1072
Arched Teak Shower Seat 60 ..... 10045580 1074
Straight Teak Shower Seat 48 ..... 10043853 1076
Straight Teak Shower Seat 60 ..... 10043854 1078

● SEATS

18x12 Teak Fold-Up Seat 10049467 1080
18x16 Phenolic Fold-Up Seat 10049539 1082

● GRAB BARS

18 in. Grab Bar 10049553 1084
24 in. Grab Bar 10049554 1086
24 in. Straight Grab Bar 10029997 1088
30 in. Grab Bar 10049555 1090
30x40 Left L-Shaped Grab Bar 10049548 1092
30x40 Right L-Shaped Grab Bar 10049549 1094
42 in. Grab Bar 10049556 1096
42 in. Straight Grab Bar 10030084 1098

● MISCELLANEOUS

Fixed Panel Support Bar 10037592 1100
L-Shape Support Arm 10068701 1100
Manhattan Bottle Holder - Pack of 2 ..... 10045090 1102
Manhattan Hook - Pack of 2 ..... 10045083 1104
Manhattan Small Hooks - Pack of 3 ..... 10045089 1106
Manhattan Squeegee 10045085 1108
Manhattan Toilet Paper Holder 10045086 1110

● DRAINS AND OVERFLOWS

Bathtub Drain 10037678 1112
Bathtub Waste and Overflow 10022491 1116
..... 10025720 1114
F2 Drain - ABS kit 10032747 1118
F2 Drain - PVC kit 10034341 1119
Linear overflow metal trim 10037670 1120

MEDICINE CABINETS AND SINKS 1122

● SINKS

Evia 100898 1122

● MEDICINE CABINETS

SVD2436 ..... 126549 1124
Element Bi-View 124901 1125
BV2430 ..... 126528 1125
BV3030 ..... 126529 1125
BV3630 ..... 126530 1125
SV1830 ..... 124903 1127
SV1636 ..... 124905 1127
Element Single View 126521 1127
SV1530 ..... 126522 1127
SV2030 ..... 126524 1127
SV2430 ..... 126526 1127
Element Tri-View 126531 1129
TV3631 ..... 126532 1129
TV4831 ..... 126533 1129

Bathtubs

Tosca 6732—Matte Black

Go to Table of Contents

Ariosa 6032

Material : Acrylic

Features

- Acrylic surface resistant to stains
- 2-piece bathtub for an easy installation
- Available in white, thunder gray, sterling silver or black color to complement any bathroom decor
- Available in an Above-the-Floor Rough (AFR) configuration for easier drain, waste and overflow installation
- Compatible with MAAX F2 Drain connector to save time and money on installation
- MAAX innovative leveling legs for easy installation
- Spacious 1-person bath
- Proudly made in North America
- High gloss finish resistant to dulling, scratching, and fading

ARIOSA 6032 - 106266

SKU	System	Color	Configuration	Dimensions & Weight	Packaging	MSRP
106266-000-001-100	Soaker - No System	White	End Drain	60 1/4” x 32” x 28” / 77 lb	39.3 ft^3	$ 2828
106266-000-001-101		Sterling Silver				$ 2828
106266-000-001-102		Black				$ 2828
106266-000-001-103		Thunder Grey				$ 2828

COMMON OPTIONS

SKU	Description	MSRP
OPT20252	Linear Waste & Overflow with pack of 3 finishes (Chrome, Brushed Nickel & Dark Bronze)	$ 537
OPT20137-004	Cable-operated waste and overflow (16 in. to 22 in.) (included in product packaging when purchased) Available colors: White **(001)**, Bone **(004)**, Chrome **(084)** and Brushed Nickel **(105)**	$ 362
OPT20137-084		$ 362
OPT20137-105		$ 362
OPT20137-001		$ 362
OPT20250-084	Brass flexible waste and overflow for high-rise construction Available colors: Chrome **(084)** and Brushed Nickel **(105)**	$ 556
OPT20250-105		$ 647
106268-000-019-000	Apron only (sold separately as a replacement part) Available standard apron colors: White **(002)** Available non-standard apron colors: Thunder Grey **(019)**, Sterling Silver **(006)** and Black **(015)**	$ 1574
106268-000-002-000		$ 1574
106268-000-006-000		$ 1574
106268-000-015-000		$ 1574

ACCESSORIES

SKU	Description	MSRP
10032754	F^2 Drain kit for high-rise construction for freestanding bathtub installation (sold separately) Respects National Building Code of Canada (CAN/ULC-S102.2 flame and smoke protection) for high rise construction Minimum space required for assembly is 10 3/8 inches Compatible exclusively with MAAX freestanding bathtubs.	$ 402
10032757	F^2 Drain - Pack of 12 ABS kits for freestanding bathtub installation (sold separately) Minimum space required for assembly is 10 3/8 inches Compatible exclusively with MAAX freestanding bathtubs.	$ 2710
10004306-001	White foam cushion with 2 suction pads (sold separately) Available color: White **(001)**	$ 138
10025081-084	Waste and overflow 27 in. flexible neck (sold separately) Available colors: Chrome **(084)** and Brushed Nickel **(105)**	$ 489

ACCESSORIES

SKU	Description	MSRP
10025081-105	Waste and overflow 27 in. flexible neck (sold separately) Available colors: Chrome **(084)** and Brushed Nickel **(105)**	$ 489
10032808-084	Brass flexible waste and overflow for high construction (sold separately) Available colors: Chrome **(084)** and Brushed Nickel **(105)**	$ 556
10032808-105		$ 647
10022491-004	Cable-operated waste and overflow (16 in. to 22 in.) (sold separately) Available colors: White **(001)**, Bone **(004)**, Chrome **(084)** and Brushed Nickel **(105)**	$ 362

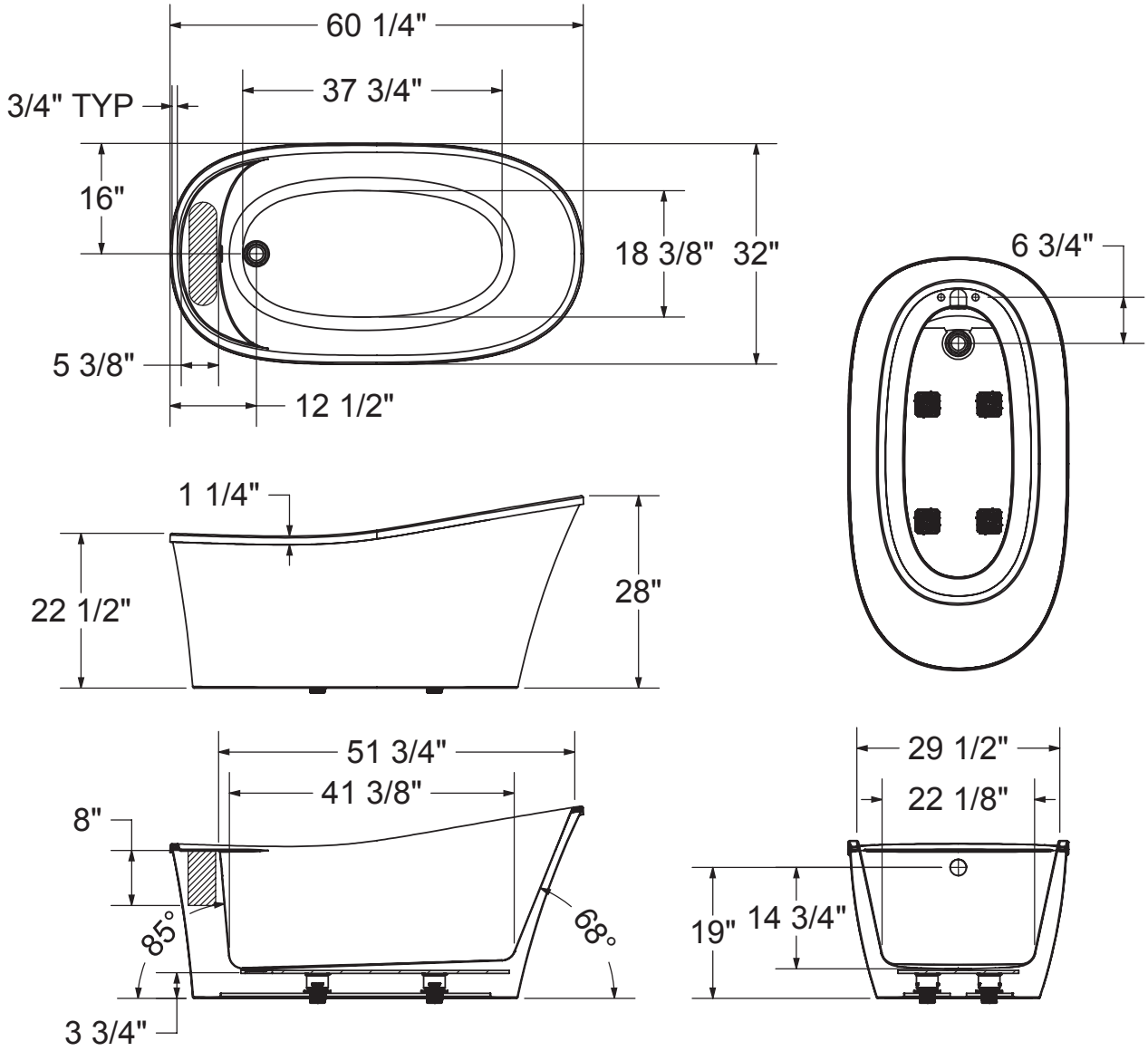

(▥) : Recommended facet area of 15" (L) x 4" (W).
Depth recommended for straight pipes 8".

All dimensions are approximate. Structure measurements must be verified against the unit to ensure proper fit.

Ariosa 6636

Material : Acrylic

Features

- Acrylic surface resistant to stains
- 2-piece bathtub for an easy installation
- Available in white, thunder gray, sterling silver or black color to complement any bathroom decor
- Available in an Above-the-Floor Rough (AFR) configuration for easier drain, waste and overflow installation
- Compatible with MAAX F2 Drain connector to save time and money on installation
- MAAX innovative leveling legs for easy installation
- Spacious 2-person bath
- Proudly made in North America
- High gloss finish resistant to dulling, scratching, and fading

ARIOSA 6636 - 106267

SKU	System	Color	Configuration	Dimensions & Weight	Packaging	MSRP
106267-000-001-100	Soaker - No System	White	Center Drain	66” x 36” x 27 3/8” / 88 lb	47.27 ft^3	$ 3301
106267-000-001-101		Sterling Silver				$ 3301
106267-000-001-102		Black				$ 3301
106267-000-001-103		Thunder Grey				$ 3301

COMMON OPTIONS

SKU	Description	MSRP
OPT20252	Linear Waste & Overflow with pack of 3 finishes (Chrome, Brushed Nickel & Dark Bronze)	$ 537
OPT20137-004	Cable-operated waste and overflow (16 in. to 22 in.) (included in product packaging when purchased) Available colors: White **(001)**, Bone **(004)**, Chrome **(084)** and Brushed Nickel **(105)**	$ 362
OPT20137-084		$ 362
OPT20137-105		$ 362
OPT20137-001		$ 362
OPT20250-084	Brass flexible waste and overflow for high-rise construction Available colors: Chrome **(084)** and Brushed Nickel **(105)**	$ 556
OPT20250-105		$ 647
106269-000-006-000	Apron only (sold separately as a replacement part) Available standard apron colors: White **(002)** Available non-standard apron colors: Thunder Grey **(019)**, Sterling Silver **(006)** and Black **(015)**	$ 1888
106269-000-019-000		$ 1888
106269-000-002-000		$ 1888
106269-000-015-000		$ 1888

ACCESSORIES

SKU	Description	MSRP
10032754	F^2 Drain kit for high-rise construction for freestanding bathtub installation (sold separately) Respects National Building Code of Canada (CAN/ULC-S102.2 flame and smoke protection) for high rise construction Minimum space required for assembly is 10 3/8 inches Compatible exclusively with MAAX freestanding bathtubs.	$ 402
10032757	F^2 Drain - Pack of 12 ABS kits for freestanding bathtub installation (sold separately) Minimum space required for assembly is 10 3/8 inches Compatible exclusively with MAAX freestanding bathtubs.	$ 2710
10004306-001	White foam cushion with 2 suction pads (sold separately) Available color: White **(001)**	$ 138
10025081-084	Waste and overflow 27 in. flexible neck (sold separately) Available colors: Chrome **(084)** and Brushed Nickel **(105)**	$ 489

ACCESSORIES

SKU	Description	MSRP
10025081-105	Waste and overflow 27 in. flexible neck (sold separately) Available colors: Chrome **(084)** and Brushed Nickel **(105)**	$ 489
10032808-084	Brass flexible waste and overflow for high construction (sold separately) Available colors: Chrome **(084)** and Brushed Nickel **(105)**	$ 556
10032808-105		$ 647
10022491-004	Cable-operated waste and overflow (16 in. to 22 in.) (sold separately) Available colors: White **(001)**, Bone **(004)**, Chrome **(084)** and Brushed Nickel **(105)**	$ 362

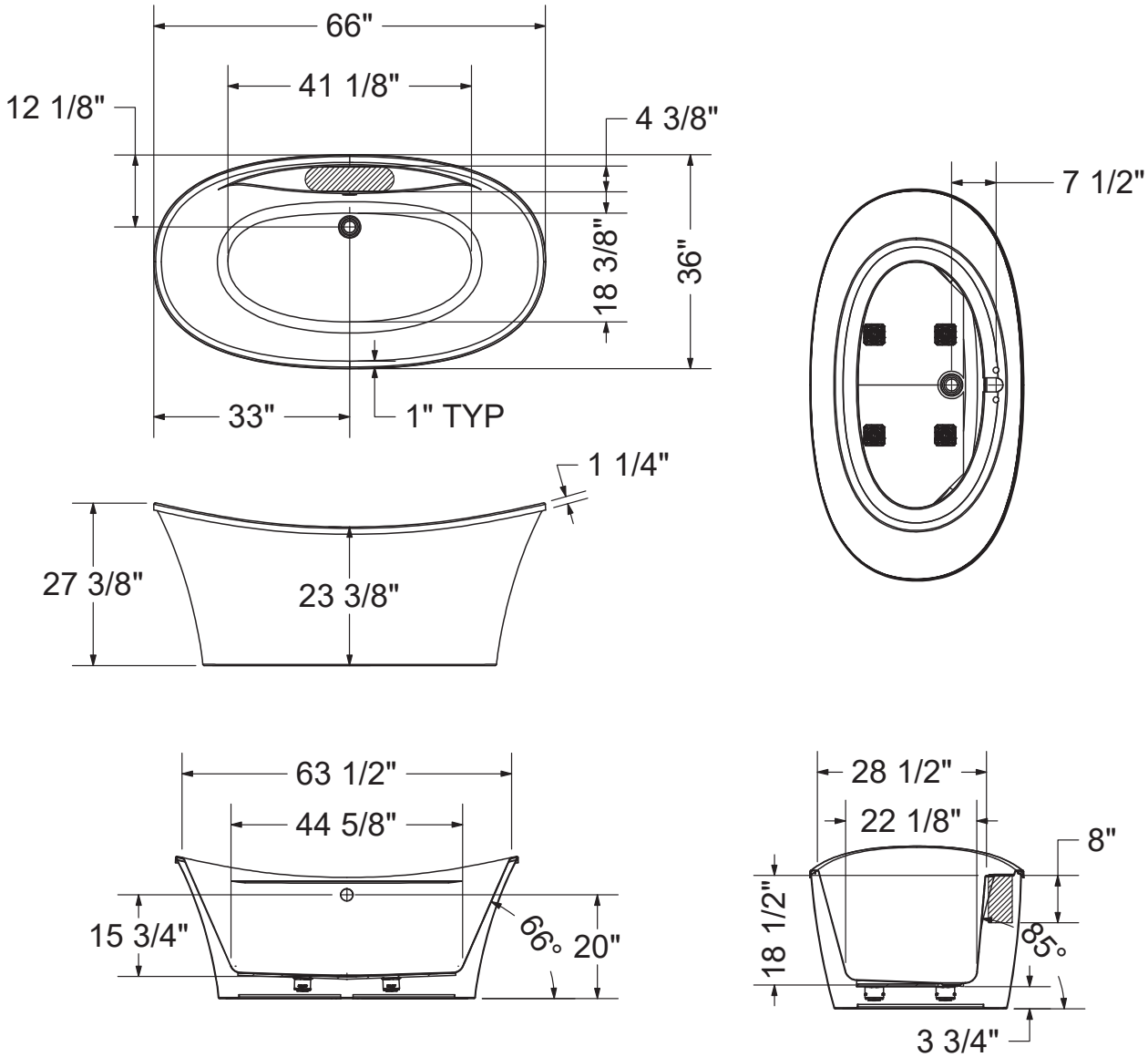

( ) : Recommended faucet area of 15" (L) x 4" (W).
Depth recommended for straight pipes 8".

All dimensions are approximate. Structure measurements must be verified against the unit to ensure proper fit.

Elina

Material : Acrylic

Features

- Compatible with MAAX F2 Drain to save time and money on installation
- Comes with MAAX innovative leveling legs for ease of installation
- Seamless 1-piece bathtub for reliable water containment
- Linear-rounded overflow and drain included and pre-installed in chrome to save time on installation
- 25-year limited warranty for your peace of mind
- Acrylic surface resistant to stains
- 2-person bath with maximized bathing well designed for optimal comfort
- High gloss finish resistant to dulling, scratching, and fading

ELINA - 106389

SKU	System	Color	Configuration	Dimensions & Weight	Packaging	MSRP
106389-000-001-000	Soaker - No System	White	Center Drain	66” x 33 7/8” x 26 7/8” / 137 lb	45 ft^3	$ 4051

COMMON OPTIONS

SKU	Description	MSRP
OPT20262-340	Linear-rounded overflow and waste metal trim kit Available colors: White **(002)**, Brushed Nickel **(105)**, Dark Bronze **(173)** and Matte Black **(340)**	$ 300
OPT20262-002		$ 300
OPT20262-105		$ 300
OPT20262-173		$ 300

ACCESSORIES

SKU	Description	MSRP
10032754	F^2 Drain kit for high-rise construction for freestanding bathtub installation (sold separately) Respects National Building Code of Canada (CAN/ULC-S102.2 flame and smoke protection) for high rise construction Minimum space required for assembly is 10 3/8 inches Compatible exclusively with MAAX freestanding bathtubs.	$ 402
10032757	F^2 Drain - Pack of 12 ABS kits for freestanding bathtub installation (sold separately) Minimum space required for assembly is 10 3/8 inches Compatible exclusively with MAAX freestanding bathtubs.	$ 2710
10037678-084	Round waste metal trim Available colors: White **(002)**, Chrome **(084)**, Brushed Nickel **(105)**, Dark Bronze **(173)** and Matte Black **(340)**	$ 203
10037675-002	Linear-rounded oveflow metal trim Available colors: White **(002)**, Chrome **(084)**, Brushed Nickel **(105)**, Dark Bronze **(173)** and Matte Black **(340)**	$ 103
10037675-084		$ 103
10037675-173		$ 103
10037675-340		$ 103
10037675-105		$ 103

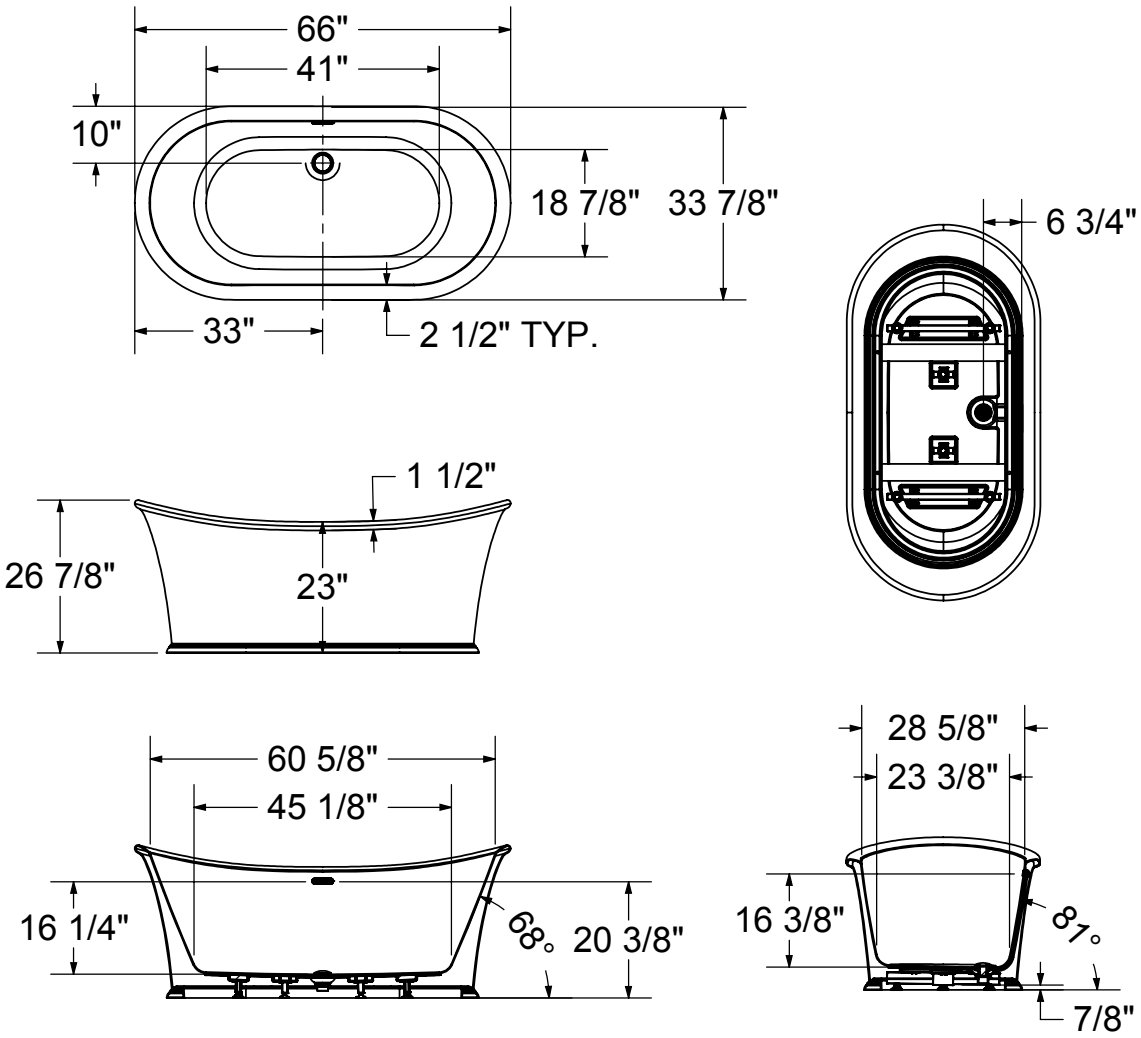

All dimensions are approximate. Structure measurements must be verified against the unit to ensure proper fit.

Go to Table of Contents

Ella Sleek

Material : Acrylic

Features

- Above-the-floor rough (AFR) to allow for easy plumbing installation without having to relocate the existing drain
- Compatible with MAAX F2 Drain to save time and money on installation
- Comes with MAAX innovative leveling legs for ease of installation
- 2-piece bathtub for an easy installation
- Available in white, thunder gray, sterling silver or black color to complement any bathroom decor
- 25-year limited warranty for your peace of mind
- Acrylic surface resistant to stains
- 2-person bath with maximized bathing well designed for optimal comfort
- High gloss finish resistant to dulling, scratching, and fading

ELLA SLEEK - 105744

SKU	System	Color	Configuration	Dimensions & Weight	Packaging	MSRP
105744-000-001-100	Soaker - No System	White	Center Drain	66” x 36” x 24” / 149 lb	37 ft^3	$ 3301
105744-000-001-103		Sterling Silver				$ 3301
105744-000-001-104		Thunder Grey				$ 3301
105744-000-015		Black				$ 3301

COMMON OPTIONS

SKU	Description	MSRP
106023-000-015	Apron only (sold separately as a replacement part) Available standard apron colors: White **(002)**, Bone **(004)**, Biscuit **(007)** Available non-standard apron colors: Thunder Grey **(019)**, Sterling Silver **(006)** or Black **(015)**	$ 1888
106023-000-019		$ 1888
106023-000-006		$ 1888
106023-000-002		$ 1888

ACCESSORIES

SKU	Description	MSRP
10032754	F^2 Drain kit for high-rise construction for freestanding bathtub installation (sold separately) Respects National Building Code of Canada (CAN/ULC-S102.2 flame and smoke protection) for high rise construction Minimum space required for assembly is 10 3/8 inches Compatible exclusively with MAAX freestanding bathtubs.	$ 402
10032757	F^2 Drain - Pack of 12 ABS kits for freestanding bathtub installation (sold separately) Minimum space required for assembly is 10 3/8 inches Compatible exclusively with MAAX freestanding bathtubs.	$ 2710
10004306-001	White foam cushion with 2 suction pads (sold separately) Available color: White **(001)**	$ 138

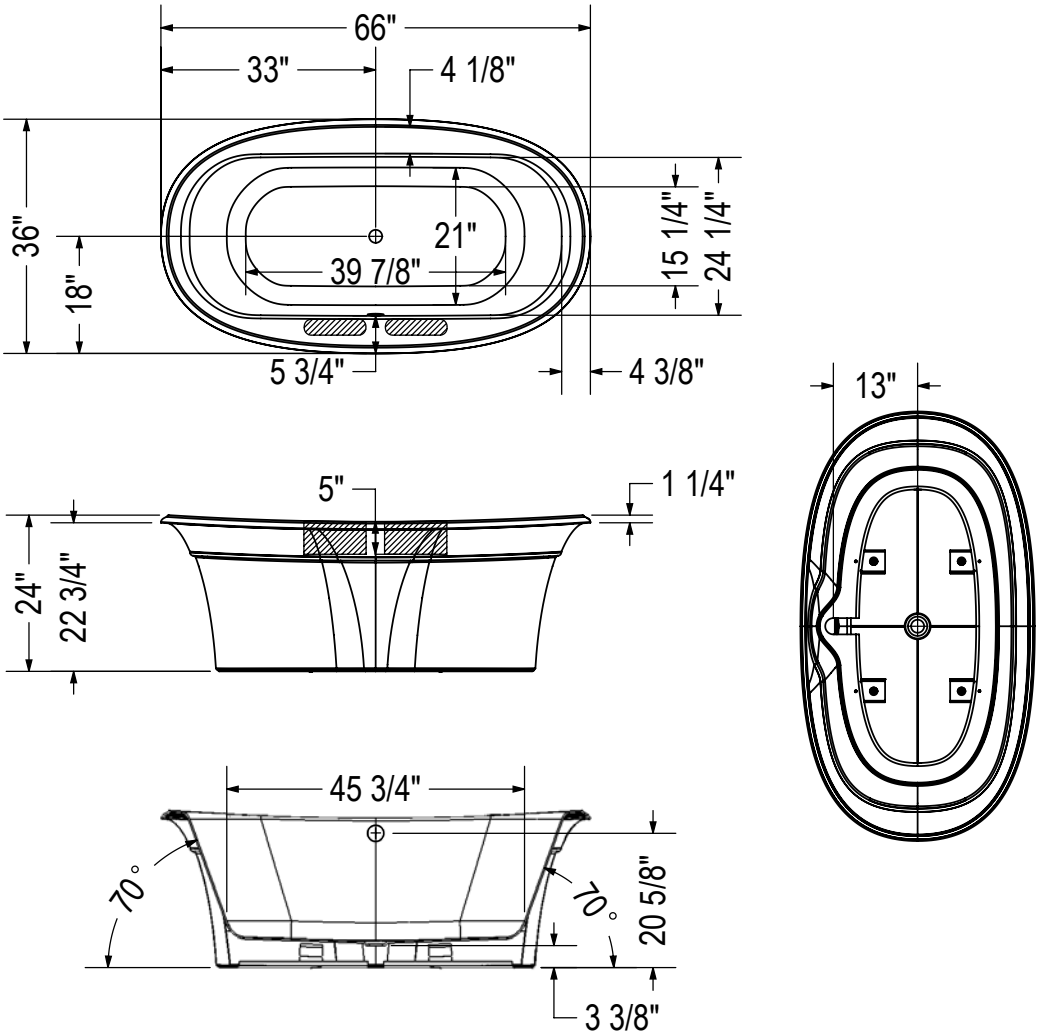

( ) : Recommended faucet area 2 sections of 10" (L) x 2 1/2" (W)
Depth recommended for straight pipes 5".

All dimensions are approximate. Structure measurements must be verified against the unit to ensure proper fit.

Fura 6732

Material : Acrylic

Features

- Seamless 1-piece bathtub with a symmetrical look
- Trimless linear overflow and white pop-up drain to match any faucet finish
- Hygienic, non-porous acrylic surface for easy cleaning
- High gloss finish resistant to dulling, scratching, and fading
- 25-year limited warranty for your peace of mind
- 2-person bath designed for optimal comfort
- Waste and overflow included and pre-installed to save time on installation
- Comes with leveling legs for ease of installation
- Compatible with MAAX F2 Drain to save time and money on installation

FURA 6732 - 107826

SKU	System	Color	Configuration	Dimensions & Weight	Packaging	MSRP
107826-000-001-000	Soaker - No System	White	Center Drain	67” x 31 1/2” x 24 1/2” / 99 lb	34.27 ft^3	$ 2960

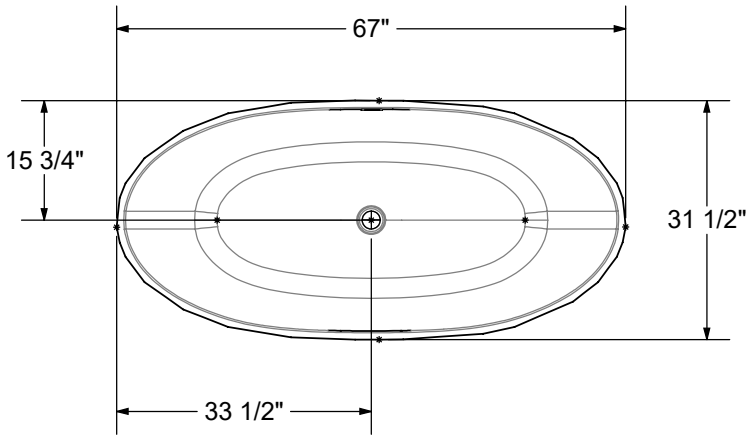

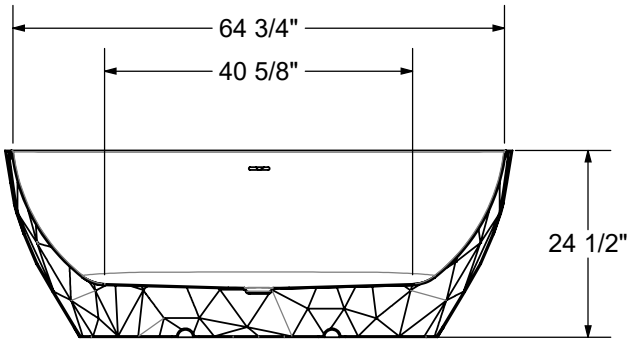

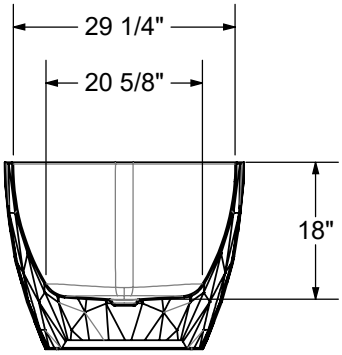

All dimensions are approximate. Structure measurements must be verified against the unit to ensure proper fit.

Go to Table of Contents

Fura Matte 6732

Material : Acrylic

Features

- Seamless 1-piece bathtub with a symmetrical look
- Trimless linear overflow and white pop-up drain to match any faucet finish
- Hygienic, non-porous acrylic surface for easy cleaning
- Matte finish enhances the bathtub's aesthetic appeal while providing a smooth, tactile surface
- 25-year limited warranty for your peace of mind
- 2-person bath designed for optimal comfort
- Waste and overflow included and pre-installed to save time on installation
- Comes with leveling legs for ease of installation
- Compatible with MAAX F2 Drain to save time and money on installation

FURA MATTE 6732 - 107827

SKU	System	Color	Configuration	Dimensions & Weight	Packaging	MSRP
107827-000-240-000	Soaker - No System	Matte White	Center Drain	67” x 31 1/2” x 24 1/2” / 99 lb	34.27 ft^3	$ 3198

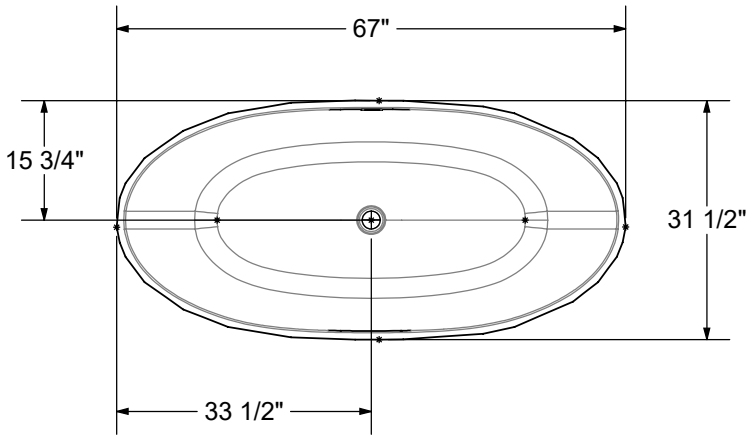

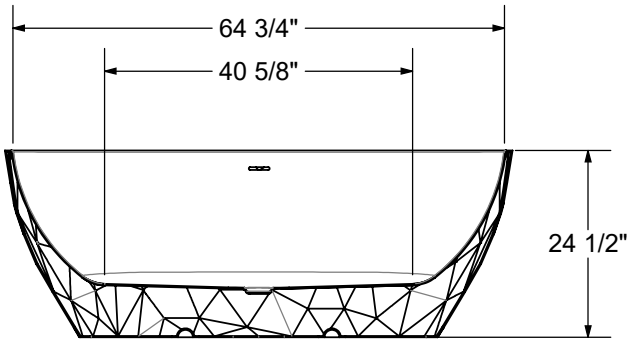

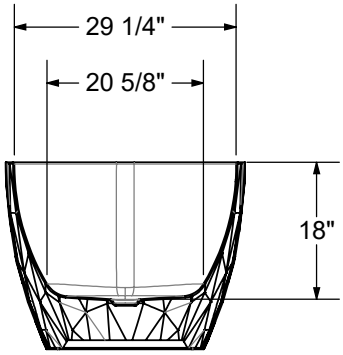

All dimensions are approximate. Structure measurements must be verified against the unit to ensure proper fit.

Hatto 5932

Material : Acrylic

Features

- Seamless 1-piece bathtub with a symmetrical look
- Trimless linear overflow and white pop-up drain to match any faucet finish
- Hygienic, non-porous acrylic surface for easy cleaning
- High gloss finish resistant to dulling, scratching, and fading
- 25-year limited warranty for your peace of mind
- 1-person bath with maximized bathing well designed for optimal comfort
- Waste and overflow included and pre-installed to save time on installation
- Comes with leveling legs for ease of installation
- Compatible with MAAX F2 Drain to save time and money on installation

HATTO 5932 - 107835

SKU	System	Color	Configuration	Dimensions & Weight	Packaging	MSRP
107835-000-001-000	Soaker - No System	White	Center Drain	59 1/16” x 31 1/2” x 23 5/8” / 86 lb	301 ft^3	$ 2484

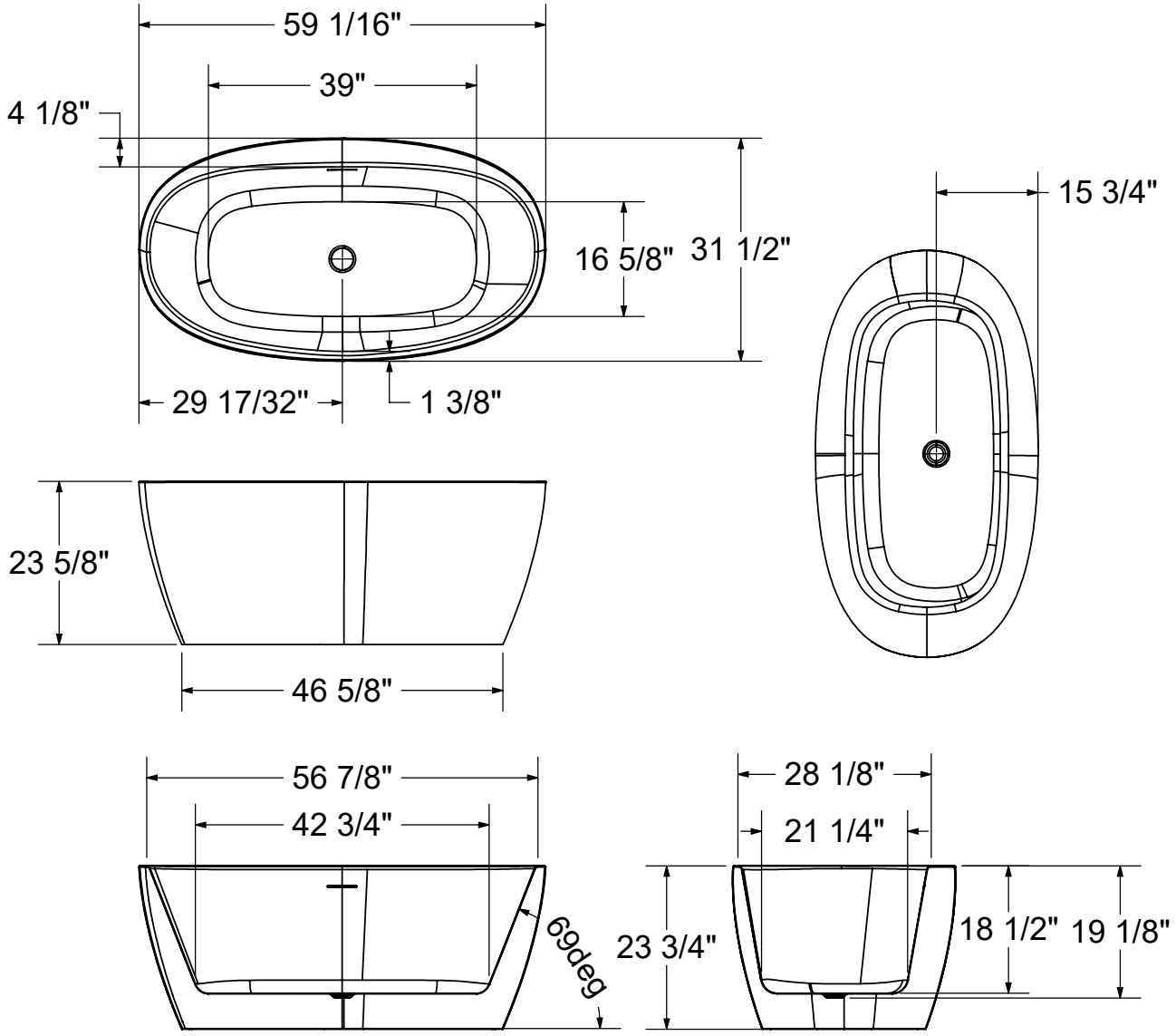

All dimensions are approximate. Structure measurements must be verified against the unit to ensure proper fit.

Hatto 6732

Material : Acrylic

Features

- Seamless 1-piece bathtub with a symmetrical look
- Trimless linear overflow and white pop-up drain to match any faucet finish
- Hygienic, non-porous acrylic surface for easy cleaning
- High gloss finish resistant to dulling, scratching, and fading
- 25-year limited warranty for your peace of mind
- 2-person bath designed for optimal comfort
- Waste and overflow included and pre-installed to save time on installation
- Comes with leveling legs for ease of installation
- Compatible with MAAX F2 Drain to save time and money on installation

HATTO 6732 - 107836

SKU	System	Color	Configuration	Dimensions & Weight	Packaging	MSRP
107836-000-001-000	Soaker - No System	White	Center Drain	67” x 31 1/2” x 23 5/8” / 93 lb	33.95 ft^3	$ 2801

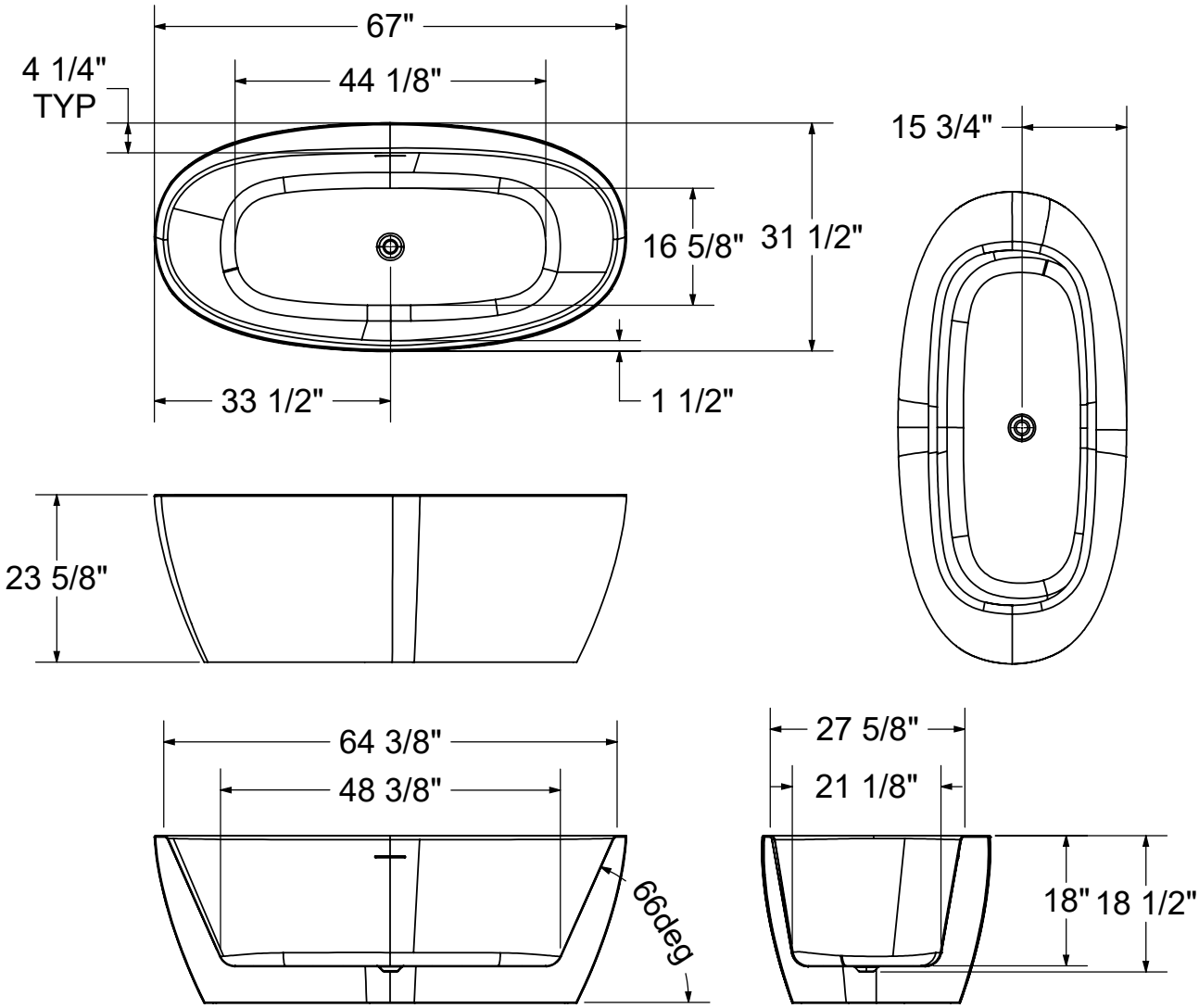

All dimensions are approximate. Structure measurements must be verified against the unit to ensure proper fit.

Go to Table of Contents

Jazz F

Material : Acrylic

Features

- Freestanding bathtub
- Acrylic surface resistant to stains
- MAAX innovative leveling legs for easy installation
- Compatible with MAAX F2 Drain connector to save time and money on installation
- Available in an Above-the-Floor Rough (AFR) configuration for easier drain, waste and overflow installation
- 2-piece bathtub for easy transportation and seamless installation
- High gloss finish resistant to dulling, scratching, and fading
- Proudly made in North America
- Adds a modern look to any bathroom

JAZZ F - 105359

SKU	System	Color	Configuration	Dimensions & Weight	Packaging	MSRP
105359-000-001-101	Soaker - No System	White	Center Drain	66” x 36” x 24” / 149 lb	37 ft^3	$ 3314
105359-055-001	Aerofeel [1] [5]					$ 7658

COMMON OPTIONS

SKU	Description	MSRP
OPT10054	Two chromatherapy lights for bathtubs without waterfall (factory installed)	$ 1010
OPT10119-105	Metal trim kit for Aerofeel electronic control (factory installed) Available colors: Chrome **(084)** and Brushed Nickel **(105)**	$ 107
OPT10119-084		$ 107

ACCESSORIES

SKU	Description	MSRP
10032754	F^2 Drain kit for high-rise construction for freestanding bathtub installation (sold separately) Respects National Building Code of Canada (CAN/ULC-S102.2 flame and smoke protection) for high rise construction Minimum space required for assembly is 10 3/8 inches Compatible exclusively with MAAX freestanding bathtubs.	$ 402
10032757	F^2 Drain - Pack of 12 ABS kits for freestanding bathtub installation (sold separately) Minimum space required for assembly is 10 3/8 inches Compatible exclusively with MAAX freestanding bathtubs.	$ 2710
10033272	Flexible main hose for electronic control air massage - kit (sold separately) 15 ft. extension	$ 407
10004306-001	White foam cushion with 2 suction pads (sold separately) Available color: White **(001)**	$ 138

FOOTNOTES

No	Description
1	Components for standard colour units equipped with systems are colour-coordinated. Trim kit and/or air push with metallic finish can be added (additional charge applies). For non-standard colour units, please specify trim kit and/or air push colour (additional charge applies for metallic finishes). Please note that the positioning of the system’s control could be in conflict with the door if one was installed on the unit. To insure compatibility, please contact customer service.
5	For details on blower position and requirements, see technical drawings on https://www.maax.com. When there is a blower position A or B indicated on the technical drawing, please specify position when ordering.

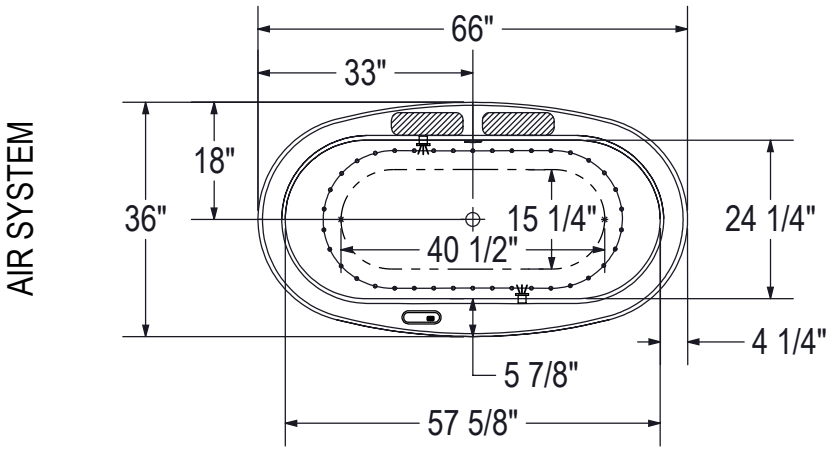

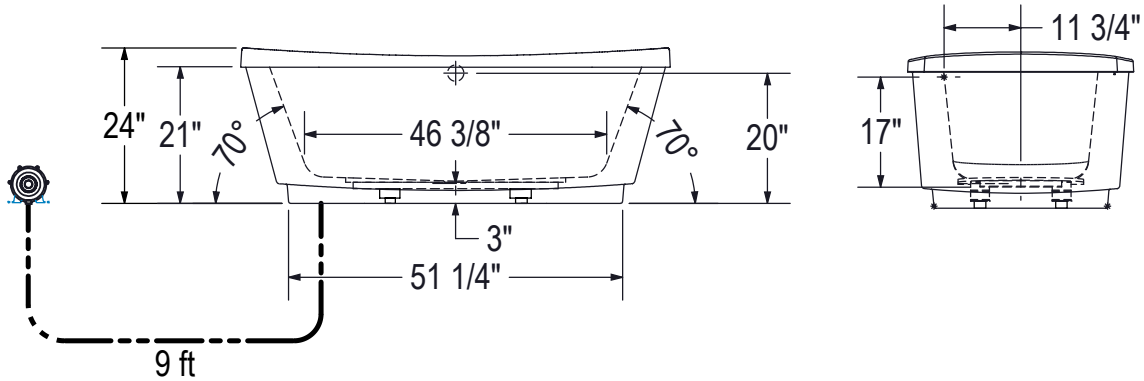

(●) : Indicates Aerofeel airjets positioning

( ) : Indicates chromatherapy light positioning

( ) : Recommended faucet area 2 sections of 12" (L) x 3 1/2" (W).

Blower must be installed at a distance.

All dimensions are approximate. Structure measurements must be verified against the unit to ensure proper fit.

Joan

Material : Acrylic

Features

- Above-the-floor rough (AFR) to allow for easy plumbing installation without having to relocate the existing drain
- Compatible with MAAX F2 Drain to save time and money on installation
- Comes with MAAX innovative leveling legs for ease of installation
- Seamless 1-piece bathtub for reliable water containment
- Linear overflow in chrome and unique hidden drain included and pre-installed to save time on installation
- 25-year limited warranty for your peace of mind
- Acrylic surface resistant to stains
- 2-person bath with maximized bathing well designed for optimal comfort
- High gloss finish resistant to dulling, scratching, and fading

JOAN - 106387

SKU	System	Color	Configuration	Dimensions & Weight	Packaging	MSRP
106387-000-001-000	Soaker - No System	White	End Drain	61” x 32” x 31 1/8” / 121 lb	40 ft^3	$ 3316

COMMON OPTIONS

SKU	Description	MSRP
OPT20263-340	Linear overflow metal trim Available colors: White **(002)**, Brushed Nickel **(105)**, Dark Bronze **(173)** and Matte Black **(340)**	$ 148
OPT20263-173		$ 148
OPT20263-105		$ 148
OPT20263-002		$ 148

ACCESSORIES

SKU	Description	MSRP
10032754	F^2 Drain kit for high-rise construction for freestanding bathtub installation (sold separately) Respects National Building Code of Canada (CAN/ULC-S102.2 flame and smoke protection) for high rise construction Minimum space required for assembly is 10 3/8 inches Compatible exclusively with MAAX freestanding bathtubs.	$ 402
10032757	F^2 Drain - Pack of 12 ABS kits for freestanding bathtub installation (sold separately) Minimum space required for assembly is 10 3/8 inches Compatible exclusively with MAAX freestanding bathtubs.	$ 2710
10037679-001	White hidden drain cover Available colors: White **(001)**	$ 326
10037884-002	Linear overflow metal trim Available colors: White **(002)**, Chrome **(084)**, Brushed Nickel **(105)**, Dark Bronze **(173)** and Matte Black **(340)**	$ 148
10037884-105		$ 148
10037884-173		$ 148
10037884-084		$ 148
10037884-340		$ 148

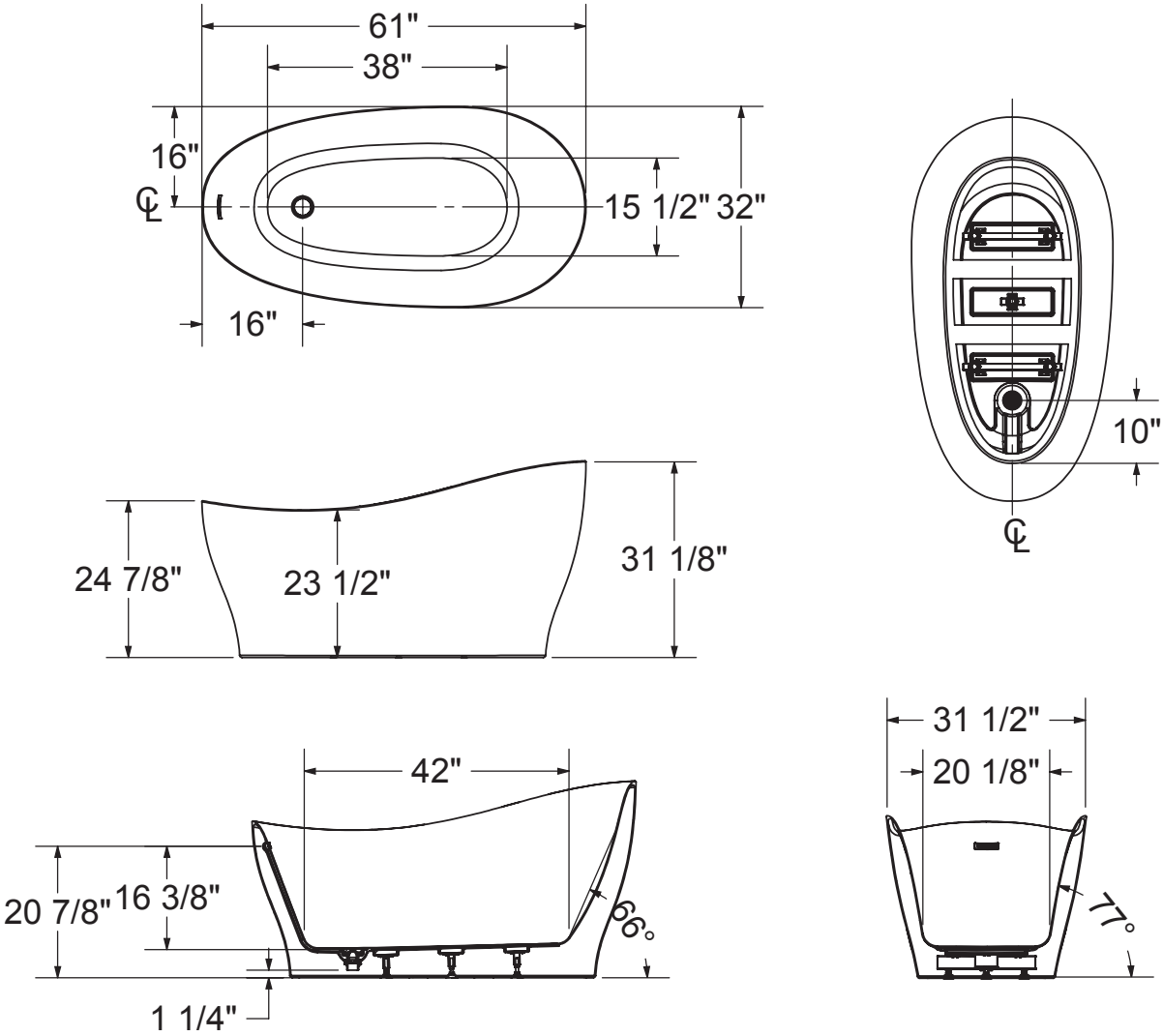

All dimensions are approximate. Structure measurements must be verified against the unit to ensure proper fit.

Go to Table of Contents

Kuja 6732

Material : Acrylic

Features

- Seamless 1-piece bathtub with an asymmetrical look
- Trimless linear overflow and white pop-up drain to match any faucet finish
- Hygienic, non-porous acrylic surface for easy cleaning
- High gloss finish resistant to dulling, scratching, and fading
- 25-year limited warranty for your peace of mind
- 1-person bath designed for optimal comfort
- Waste and overflow included and pre-installed to save time on installation
- Comes with leveling legs for ease of installation
- Compatible with MAAX F2 Drain to save time and money on installation

KUJA 6732 - 107832

SKU	System	Color	Configuration	Dimensions & Weight	Packaging	MSRP
107832-000-001-000	Soaker - No System	White	End Drain	67” x 31 1/2” x 23 5/8” / 115 lb	33.95 ft^3	$ 2960

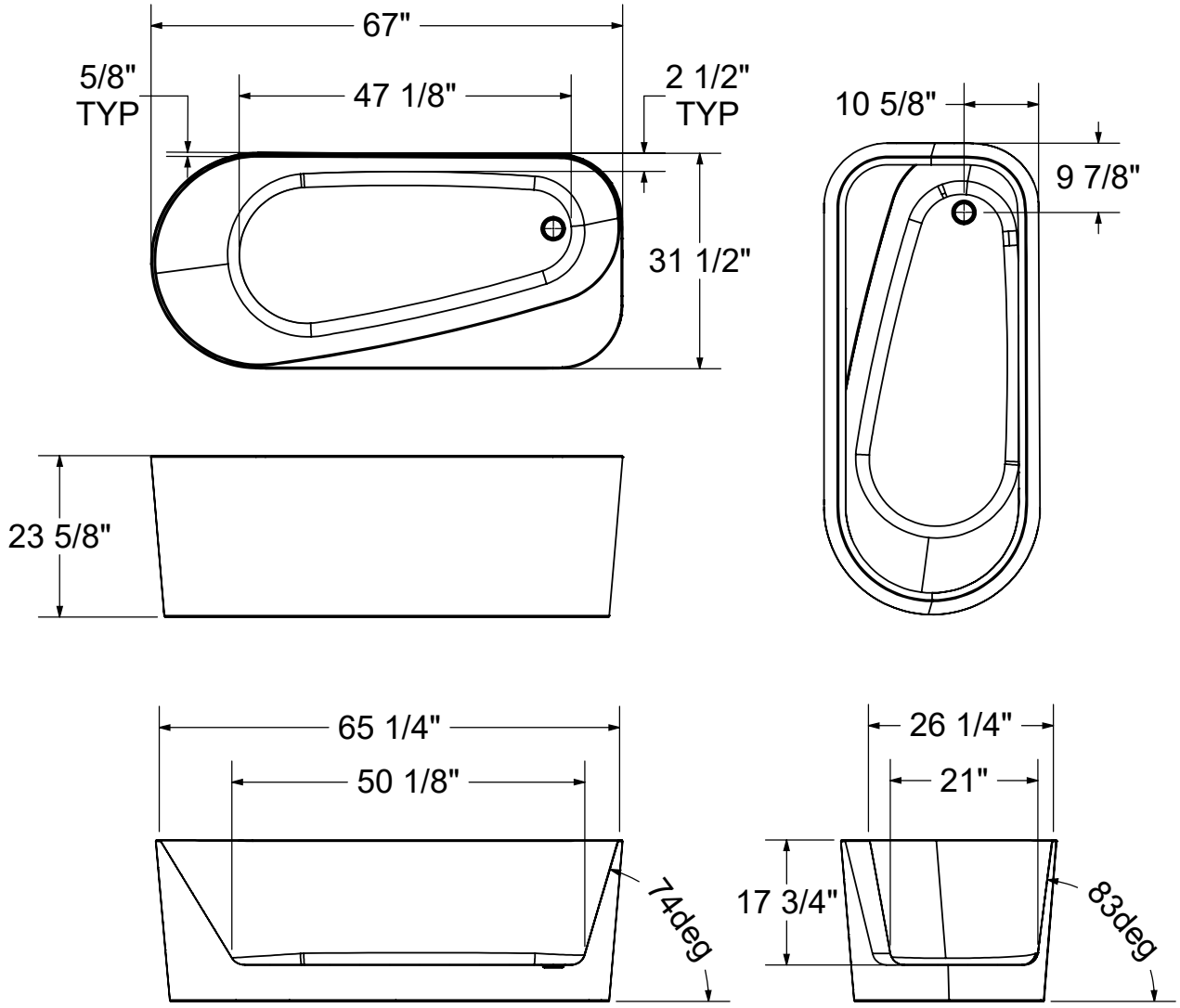

All dimensions are approximate. Structure measurements must be verified against the unit to ensure proper fit.

Oberto

Material : Acrylic

Features

- Freestanding bathtub
- Seamless 1-piece bathtub with a symmetrical look
- Acrylic surface resistant to stains
- Compatible with MAAX F2 Drain connector to save time and money on installation
- Ample deck space for faucet installation
- Waste and overflow included in chrome and pre-installed to save time on installation
- Offered only in white with optional trim finishes available
- MAAX innovative leveling legs for easy installation
- Available in central drain configurations only

OBERTO 6731 - 106386

SKU	System	Color	Configuration	Dimensions & Weight	Packaging	MSRP
106386-000-001-000	Soaker - No System	White	Center Drain	67” x 31” x 23” / 132 lb	36 ft^3	$ 3531

COMMON OPTIONS

SKU	Description	MSRP
OPT20260-105	Linear overflow and waste metal trim kit Available colors: White **(002)**, Brushed Nickel **(105)**, Dark Bronze **(173)** and Matte Black **(340)**	$ 300
OPT20260-002		$ 300
OPT20260-340		$ 300
OPT20260-173		$ 300

ACCESSORIES

SKU	Description	MSRP
10032754	F^2 Drain kit for high-rise construction for freestanding bathtub installation (sold separately) Respects National Building Code of Canada (CAN/ULC-S102.2 flame and smoke protection) for high rise construction Minimum space required for assembly is 10 3/8 inches Compatible exclusively with MAAX freestanding bathtubs.	$ 402
10032757	F^2 Drain - Pack of 12 ABS kits for freestanding bathtub installation (sold separately) Minimum space required for assembly is 10 3/8 inches Compatible exclusively with MAAX freestanding bathtubs.	$ 2710
10037678-084	Round waste metal trim Available colors: White **(002)**, Chrome **(084)**, Brushed Nickel **(105)**, Dark Bronze **(173)** and Matte Black **(340)**	$ 203

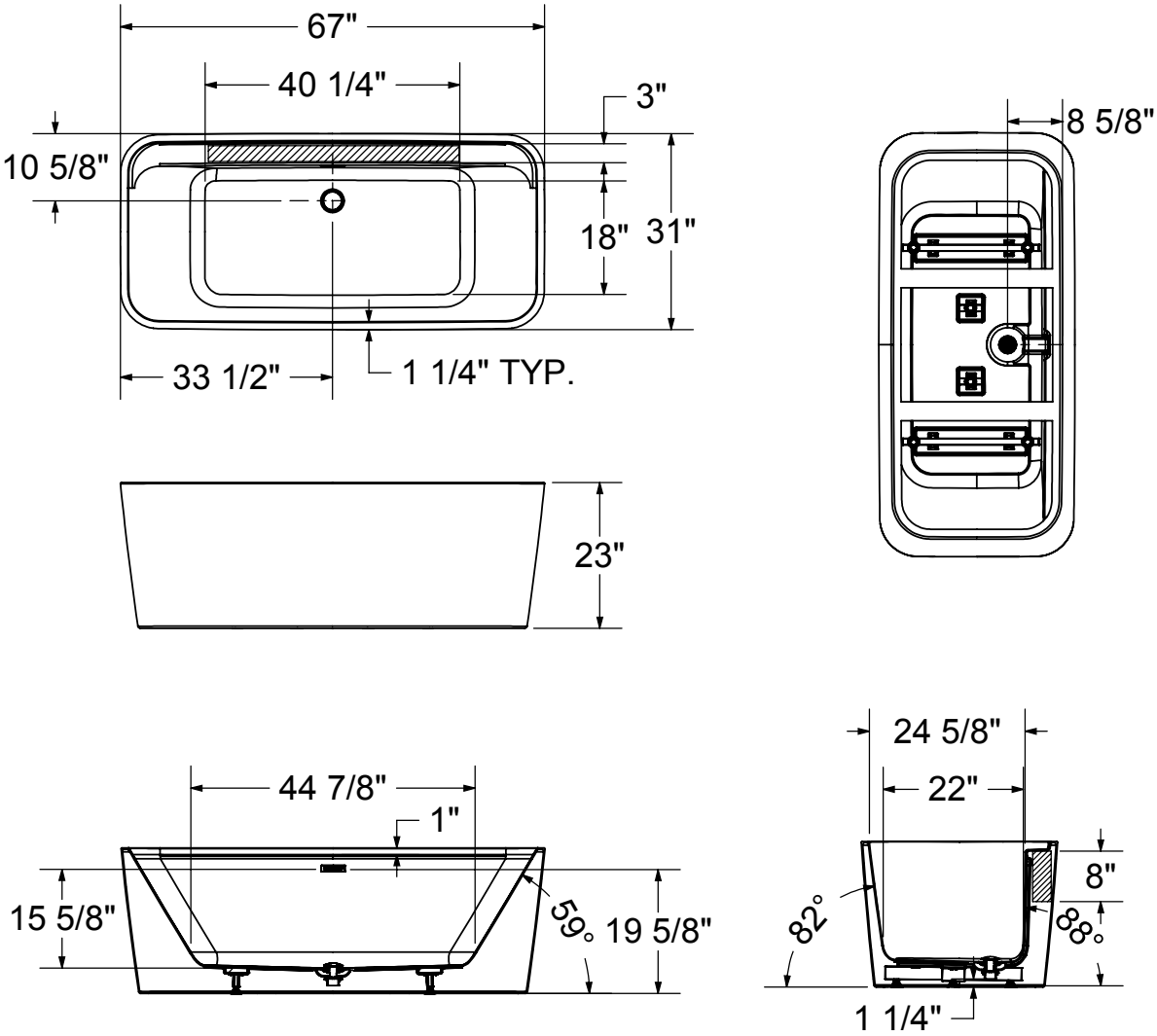

( ) Recommended faucet area of 40" (L) x 4" (W).
Depth recommended for straight pipes 8".

All dimensions are approximate. Structure measurements must be verified against the unit to ensure proper fit.

Go to Table of Contents

Oberto 6032

Material : Acrylic

Features

- Seamless 1-piece bathtub with a symmetrical look
- Trimless linear overflow and white pop-up drain to match any faucet finish
- Hygienic, non-porous acrylic surface for easy cleaning
- High gloss finish resistant to dulling, scratching, and fading
- 25-year limited warranty for your peace of mind
- 1-person bath with maximized bathing well designed for optimal comfort
- Waste and overflow included and pre-installed to save time on installation
- Comes with leveling legs for ease of installation
- Compatible with MAAX F2 Drain to save time and money on installation

OBERTO 6032 - 107845

SKU	System	Color	Configuration	Dimensions & Weight	Packaging	MSRP
107845-000-001-000	Soaker - No System	White	Center Drain	60” x 32” x 23” / 111 lb	30.5 ft^3	$ 2749

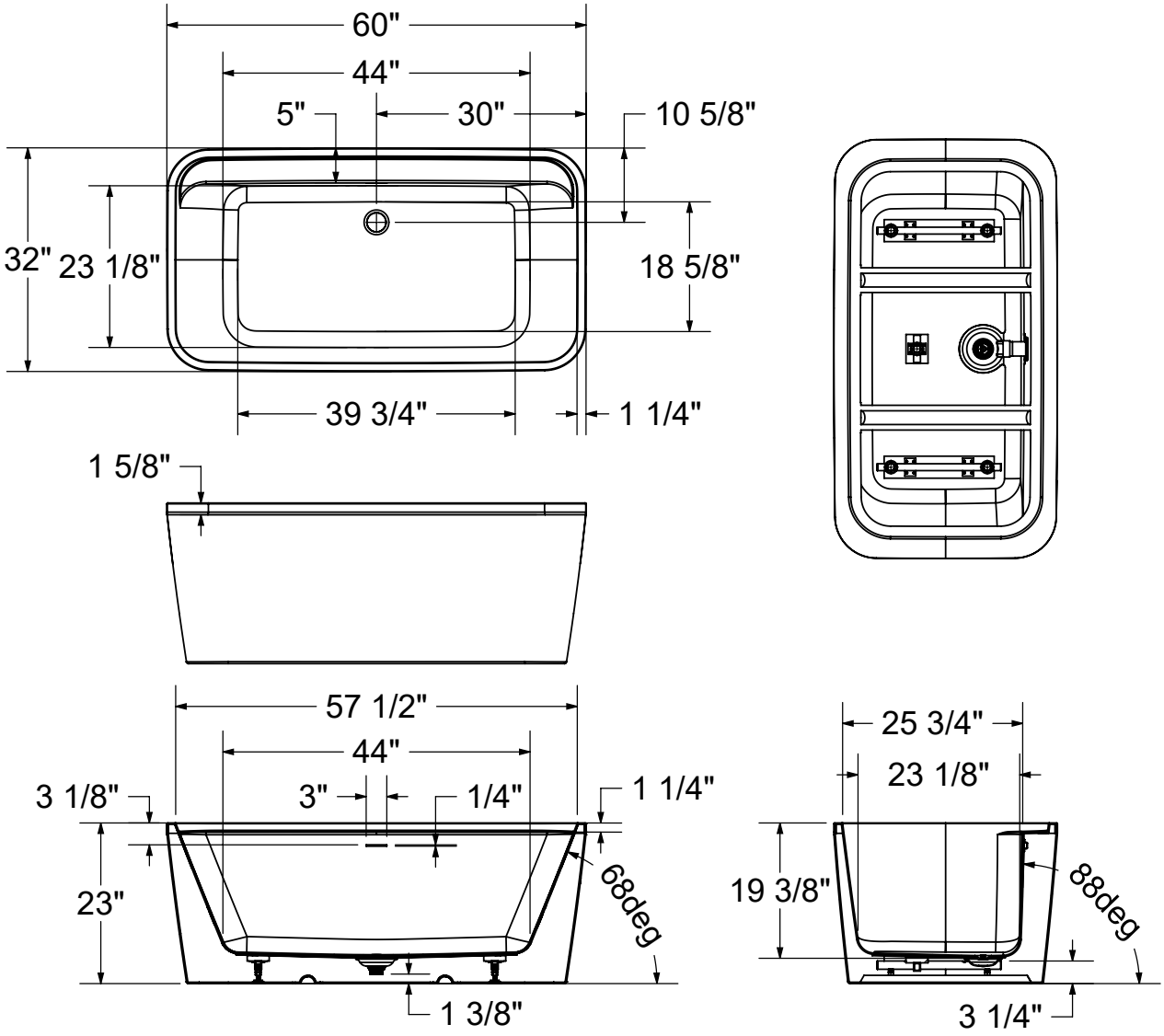

All dimensions are approximate. Structure measurements must be verified against the unit to ensure proper fit.

Go to Table of Contents

Ommu 5932

Material : Acrylic

Features

- Seamless 1-piece bathtub with a symmetrical look
- Trimless linear overflow and white pop-up drain to match any faucet finish
- Hygienic, non-porous acrylic surface for easy cleaning
- High gloss finish resistant to dulling, scratching, and fading
- 25-year limited warranty for your peace of mind
- 1-person bath with maximized bathing well designed for optimal comfort
- Waste and overflow included and pre-installed to save time on installation
- Comes with leveling legs for ease of installation
- Compatible with MAAX F2 Drain to save time and money on installation

OMMU 5932 - 107833

SKU	System	Color	Configuration	Dimensions & Weight	Packaging	MSRP
107833-000-001-000	Soaker - No System	White	Center Drain	59 1/16” x 31 1/2” x 23 5/8” / 88 lb	301 ft^3	$ 2431

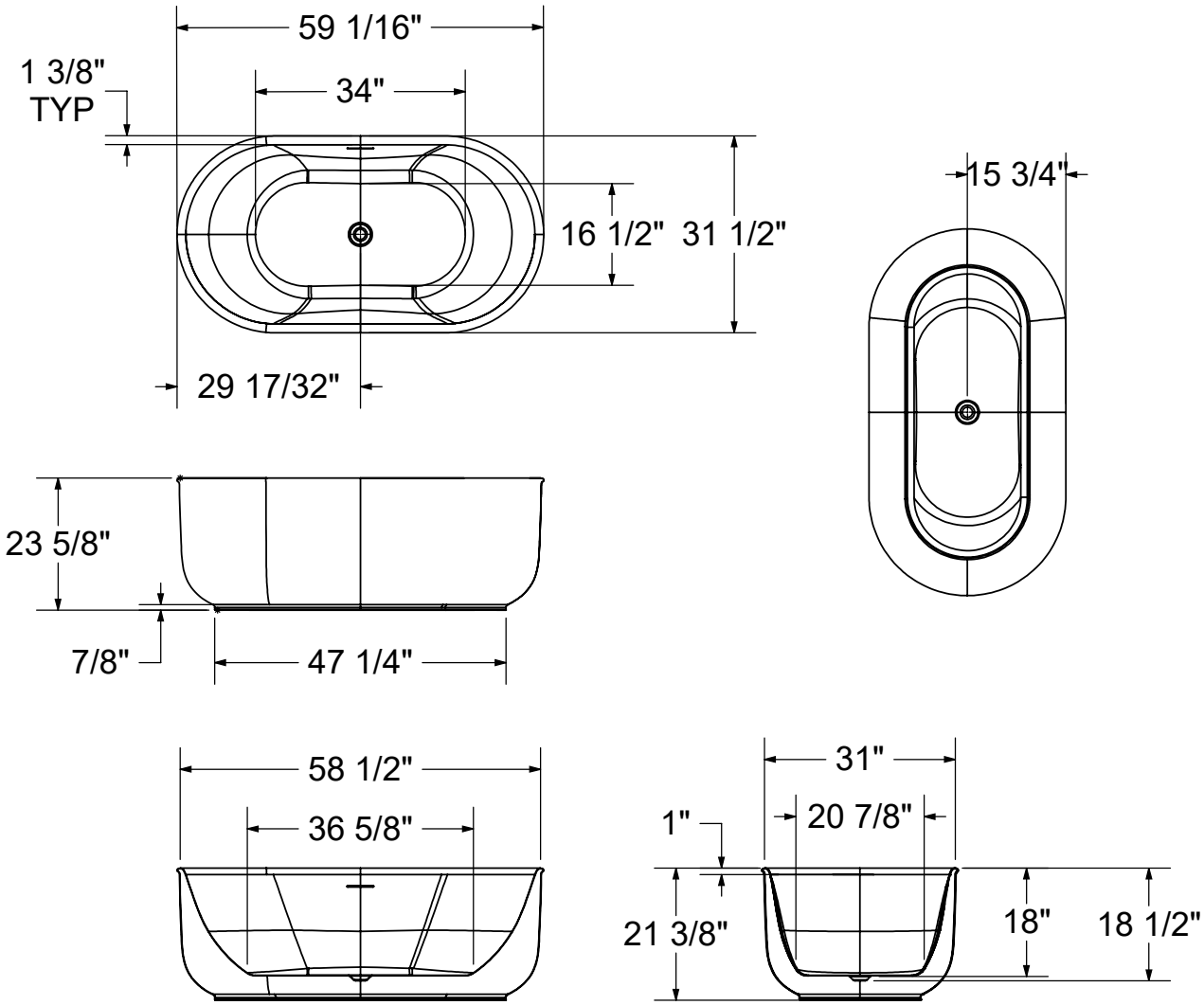

All dimensions are approximate. Structure measurements must be verified against the unit to ensure proper fit.

Go to Table of Contents

Ommu 6732

Material : Acrylic

Features

- Seamless 1-piece bathtub with a symmetrical look
- Trimless linear overflow and white pop-up drain to match any faucet finish
- Hygienic, non-porous acrylic surface for easy cleaning
- High gloss finish resistant to dulling, scratching, and fading
- 25-year limited warranty for your peace of mind
- 2-person bath designed for optimal comfort
- Waste and overflow included and pre-installed to save time on installation
- Comes with leveling legs for ease of installation
- Compatible with MAAX F2 Drain to save time and money on installation

OMMU 6732 - 107834

SKU	System	Color	Configuration	Dimensions & Weight	Packaging	MSRP
107834-000-001-000	Soaker - No System	White	Center Drain	67” x 31 1/2” x 23 5/8” / 99 lb	33.95 ft^3	$ 2749

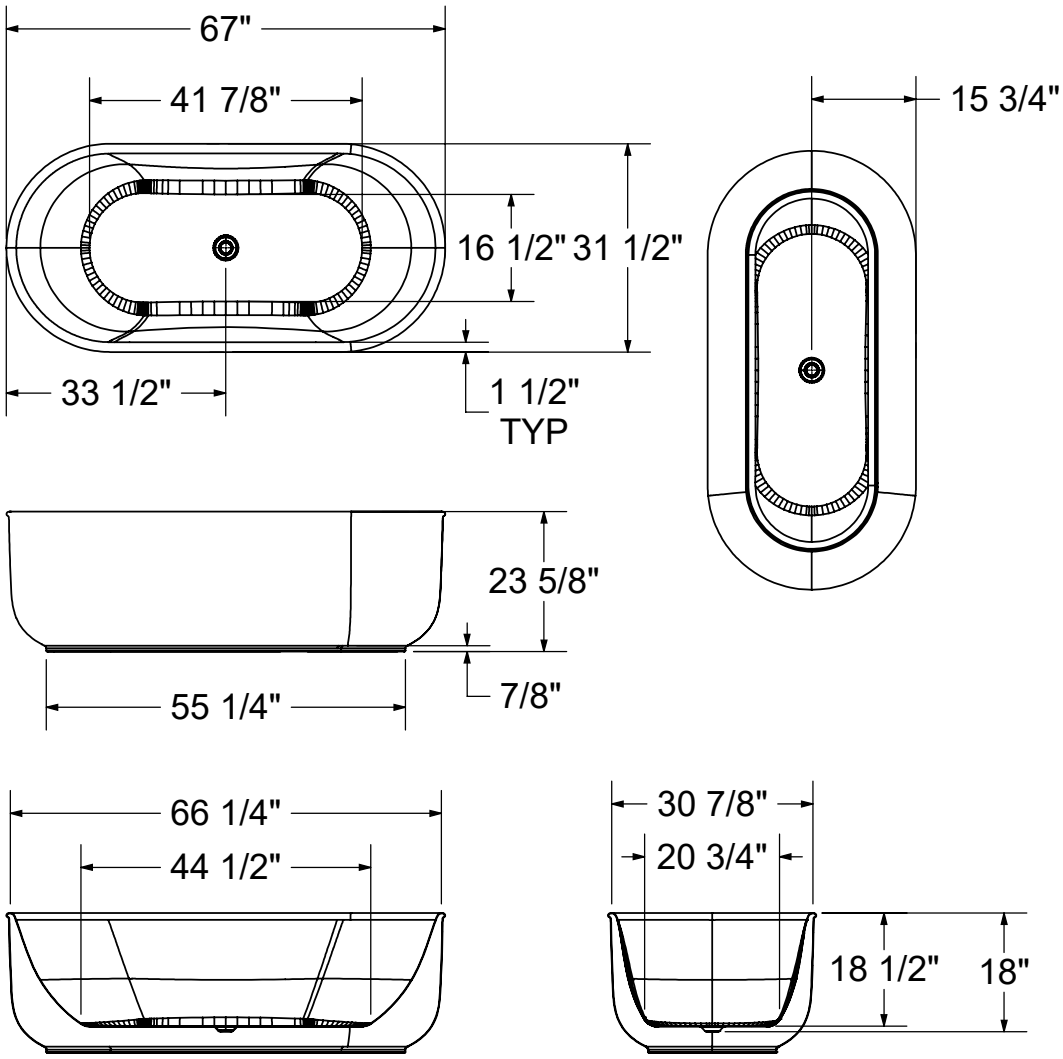

All dimensions are approximate. Structure measurements must be verified against the unit to ensure proper fit.

Optik 6032 F

Material : Acrylic

Features

- Sleek 2-piece freestanding combines straight and curvaceous lines
- Inclined backrest, curvaceous inset armrests, deep bathing well
- Ample deck space for faucet installation
- MAAX innovative leveling legs for easy installation
- Above-the-Floor Rough (AFR) and F² Drain compatible
- Apron available in standard colors and 3 designer colors
- Air massage system available
- End drain

OPTIK 6032 F - 105571

SKU	System	Color	Configuration	Dimensions & Weight	Packaging	MSRP
105571-000-001-100	Soaker - No System	White	End Drain	60” x 32” x 23 1/4” / 125 lb	29 ft³	$ 2828
105571-000-001-101		Sterling Silver				$ 2828
105571-000-001-102		Thunder Grey				$ 2828
105571-000-001-105		Black				$ 2828
105571-055-001-100	Aerofeel [1 5]	White				$ 7172
105571-055-006		Sterling Silver				$ 7172
105571-055-015		Black				$ 7172
105571-055-019		Thunder Grey				$ 7172

COMMON OPTIONS

SKU	Description	MSRP
OPT10054	Two chromatherapy lights for bathtubs without waterfall (factory installed)	$ 1010
OPT10119-105	Metal trim kit for Aerofeel electronic control (factory installed) Available colors: Chrome **(084)** and Brushed Nickel **(105)**	$ 107
OPT10119-084		$ 107
105572-000-019-000	Apron only (sold separately as a replacement part) Available standard apron colors White **(002)** Available non-standard apron colors: Thunder Grey **(019)**, Sterling Silver **(006)**, Black **(015)**	$ 1574
105572-000-015		$ 1574
105572-000-006-000		$ 1574
OPT20137-004	Cable-operated waste and overflow (16 in. to 22 in.) (included in product packaging when purchased) Available colors: White **(001)**, Bone **(004)**, Chrome **(084)** and Brushed Nickel **(105)**	$ 362
OPT20137-084		$ 362
OPT20137-105		$ 362
OPT20137-001		$ 362

ACCESSORIES

SKU	Description	MSRP
10013029-015	Minimalist cushion (magnetic) (sold separately for Optik and Aiiki) Available colours: White **(001)** and Black **(015)**	$ 262
10013029-001		$ 262
10032754	F² Drain kit for high-rise construction for freestanding bathtub installation (sold separately) Respects National Building Code of Canada (CAN/ULC-S102.2 flame and smoke protection) for high rise construction Minimum space required for assembly is 10 3/8 inches Compatible exclusively with MAAX freestanding bathtubs.	$ 402
10032757	F² Drain - Pack of 12 ABS kits for freestanding bathtub installation (sold separately) Minimum space required for assembly is 10 3/8 inches Compatible exclusively with MAAX freestanding bathtubs.	$ 2710
10033272	Flexible main hose for electronic control air massage - kit (sold separately) 15 ft. extension	$ 407

ACCESSORIES

SKU	Description	MSRP
10022491-004	Cable-operated waste and overflow (16 in. to 22 in.) (sold separately) Available colors: White **(001)**, Bone **(004)**, Chrome **(084)** and Brushed Nickel **(105)**	$ 362

FOOTNOTES

No	Description
1	Components for standard colour units equipped with systems are colour-coordinated. Trim kit and/or air push with metallic finish can be added (additional charge applies). For non-standard colour units, please specify trim kit and/or air push colour (additional charge applies for metallic finishes). Please note that the positioning of the system's control could be in conflict with the door if one was installed on the unit. To insure compatibility, please contact customer service.
5	For details on blower position and requirements, see technical drawings on https://www.maax.com. When there is a blower position A or B indicated on the technical drawing, please specify position when ordering.

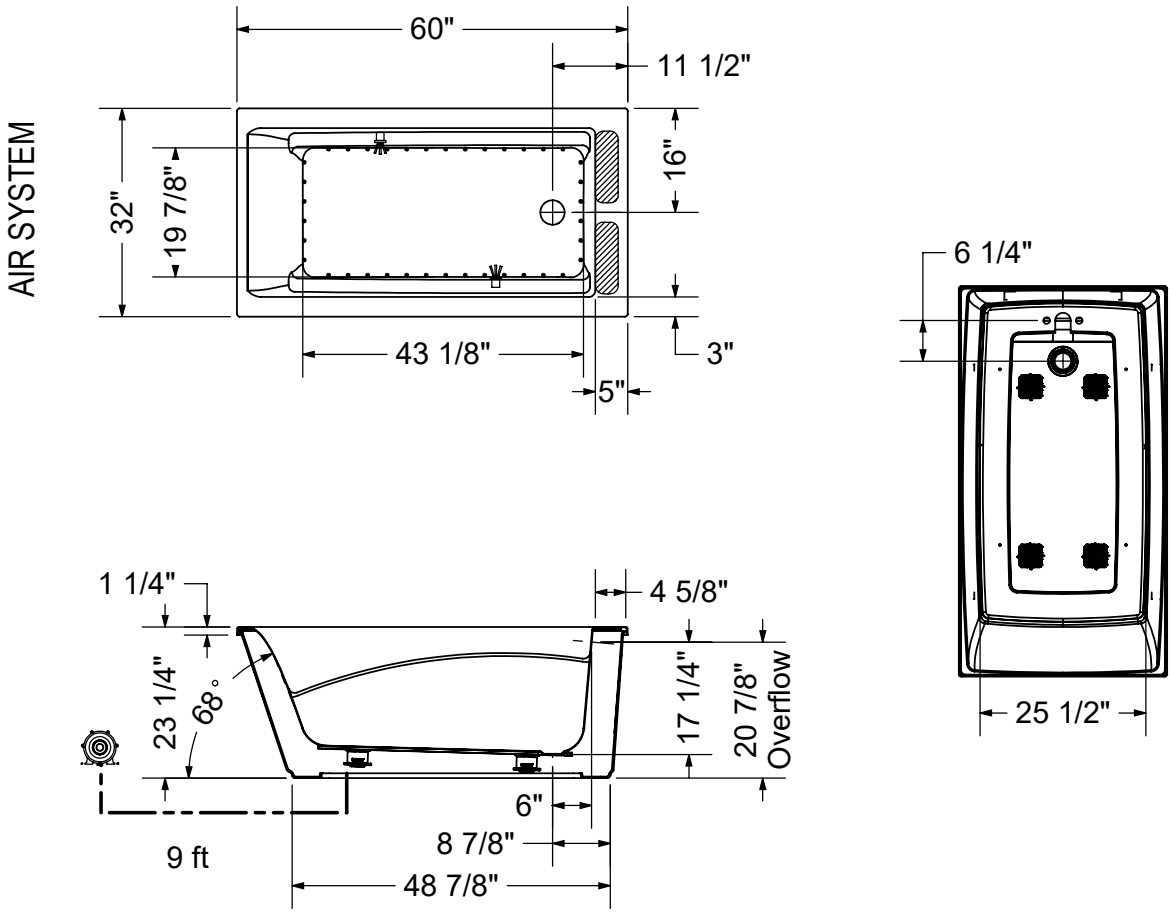

(●) : Indicates airjets positioning
( ) : Indicates chromatherapy light positioning
( ) : Recommended faucet area 2 sections of 12" (L) x 3 1/2" (W).

Blower must be installed at a distance

All dimensions are approximate. Structure measurements must be verified against the unit to ensure proper fit.

Optik 6636 F

Material : Acrylic

Features

- Freestanding bathtub
- Acrylic surface resistant to stains
- MAAX innovative leveling legs for easy installation
- Compatible with MAAX F2 Drain connector to save time and money on installation
- 2-piece bathtub for easy transportation and seamless installation
- Proudly made in North America
- Available in white, thunder gray, sterling silver or black color to complement any bathroom decor
- Curvaceous inset armrests for optimal comfort
- Available in an Above-the-Floor Rough (AFR) configuration for easier drain, waste and overflow installation

OPTIK 6636 F - 105742

SKU	System	Color	Configuration	Dimensions & Weight	Packaging	MSRP
105742-000-001-100	Soaker - No System	White	Center Drain	66” x 36” x 24” / 140 lb	37 ft^3	$ 3301
105742-000-001-103		Sterling Silver				$ 3301
105742-000-001-104		Thunder Grey				$ 3301
105742-000-001-113		Black				$ 3301
105742-055-001-105	Aerofeel [1 5]	Sterling Silver				$ 7645
105742-055-001-107		Thunder Grey				$ 7645
105742-055-001-114		White				$ 7645
105742-055-015		Black				$ 7645

COMMON OPTIONS

SKU	Description	MSRP
OPT10054	Two chromatherapy lights for bathtubs without waterfall (factory installed)	$ 1010
OPT10119-105	Metal trim kit for Aerofeel electronic control (factory installed) Available colors: Chrome **(084)** and Brushed Nickel **(105)**	$ 107
OPT10119-084		$ 107
106022-000-015	Apron only (sold separately as a replacement part) Available standard apron color: White **(002)** Available non-standard apron colors: Thunder Grey **(019)**, Silver Grey **(006)** or Black **(015)**	$ 1888
106022-000-002-000		$ 1888
106022-000-019		$ 1888
106022-000-006		$ 1888

ACCESSORIES

SKU	Description	MSRP
10013029-015	Minimalist cushion (magnetic) (sold separately for Optik and Aiiki) Available colours: White **(001)** and Black **(015)**	$ 262
10013029-001		$ 262
10032754	F^2 Drain kit for high-rise construction for freestanding bathtub installation (sold separately) Respects National Building Code of Canada (CAN/ULC-S102.2 flame and smoke protection) for high rise construction Minimum space required for assembly is 10 3/8 inches Compatible exclusively with MAAX freestanding bathtubs.	$ 402
10032757	F^2 Drain - Pack of 12 ABS kits for freestanding bathtub installation (sold separately) Minimum space required for assembly is 10 3/8 inches Compatible exclusively with MAAX freestanding bathtubs.	$ 2710
10033272	Flexible main hose for electronic control air massage - kit (sold separately) 15 ft. extension	$ 407

FOOTNOTES

No	Description
1	Components for standard colour units equipped with systems are colour-coordinated. Trim kit and/or air push with metallic finish can be added (additional charge applies). For non-standard colour units, please specify trim kit and/or air push colour (additional charge applies for metallic finishes). Please note that the positioning of the system's control could be in conflict with the door if one was installed on the unit. To insure compatibility, please contact customer service.
5	For details on blower position and requirements, see technical drawings on https://www.maax.com. When there is a blower position A or B indicated on the technical drawing, please specify position when ordering.

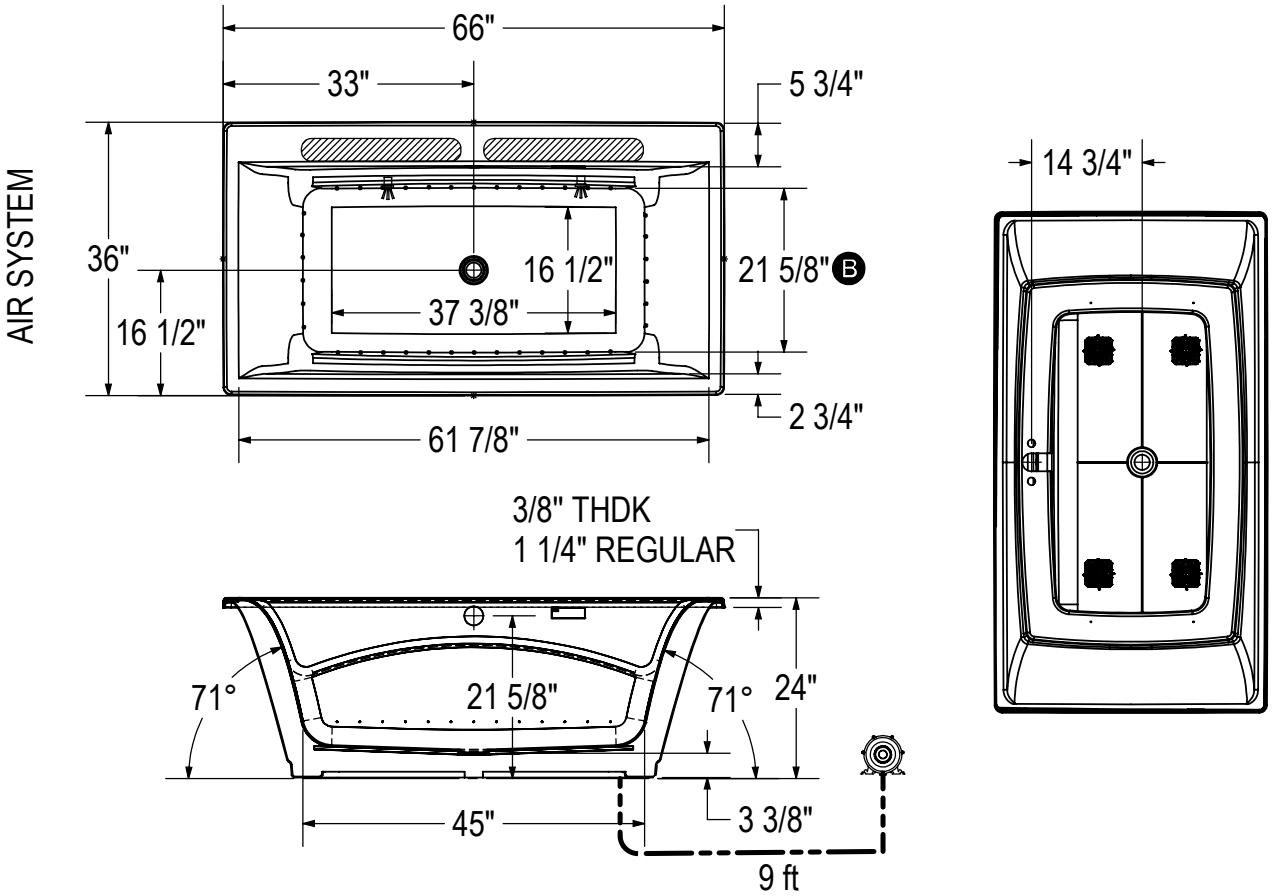

B : Specify remote blower location when ordering

(●) : Indicates airjets positioning

( ) : Indicates chromatherapy light positioning

( ) : Recommended faucet area 2 sections of 20" (L) x 3 1/4" (W).

Blower must be installed at a distance.

All dimensions are approximate. Structure measurements must be verified against the unit to ensure proper fit.

Go to Table of Contents

Renata 6731

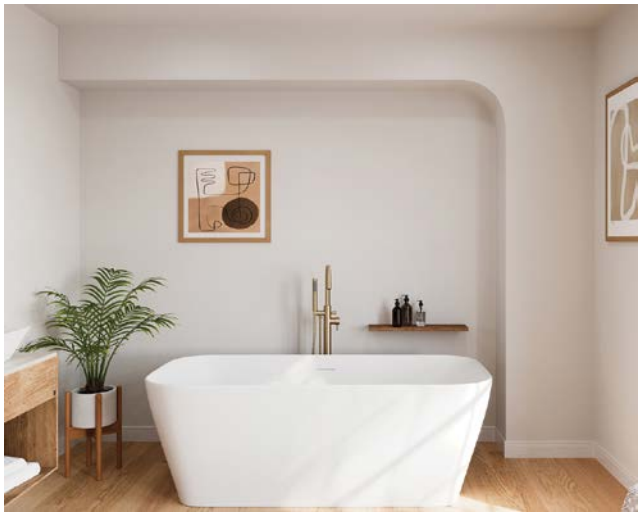

Material : Acrylic

Features

- Above-the-floor rough (AFR) to allow for easy plumbing installation without having to relocate the existing drain
- Compatible with MAAX F2 Drain to save time and money on installation
- Comes with MAAX innovative leveling legs for ease of installation
- Seamless 1-piece bathtub for reliable water containment
- Waste and overflow included and pre-installed to save time on installation
- Trimless linear overflow for versatility
- Acrylic surface resistant to stains
- 2-person bath with maximized bathing well designed for optimal comfort
- The matte finish enhances the bathtub's aesthetic appeal while providing a smooth, tactile surface

RENATA - 107173

SKU	System	Color	Configuration	Dimensions & Weight	Packaging	MSRP
107173-000-240-000	Soaker - No System	Matte White	Center Drain	66 7/8" x 31 1/2" x 23 5/8" / 121 lb	72.65 ft^3	$ 4109

ACCESSORIES

SKU	Description	MSRP
10032757	F^2 Drain - Pack of 12 ABS kits for freestanding bathtub installation (sold separately) Minimum space required for assembly is 10 3/8 inches Compatible exclusively with MAAX freestanding bathtubs.	$ 2710

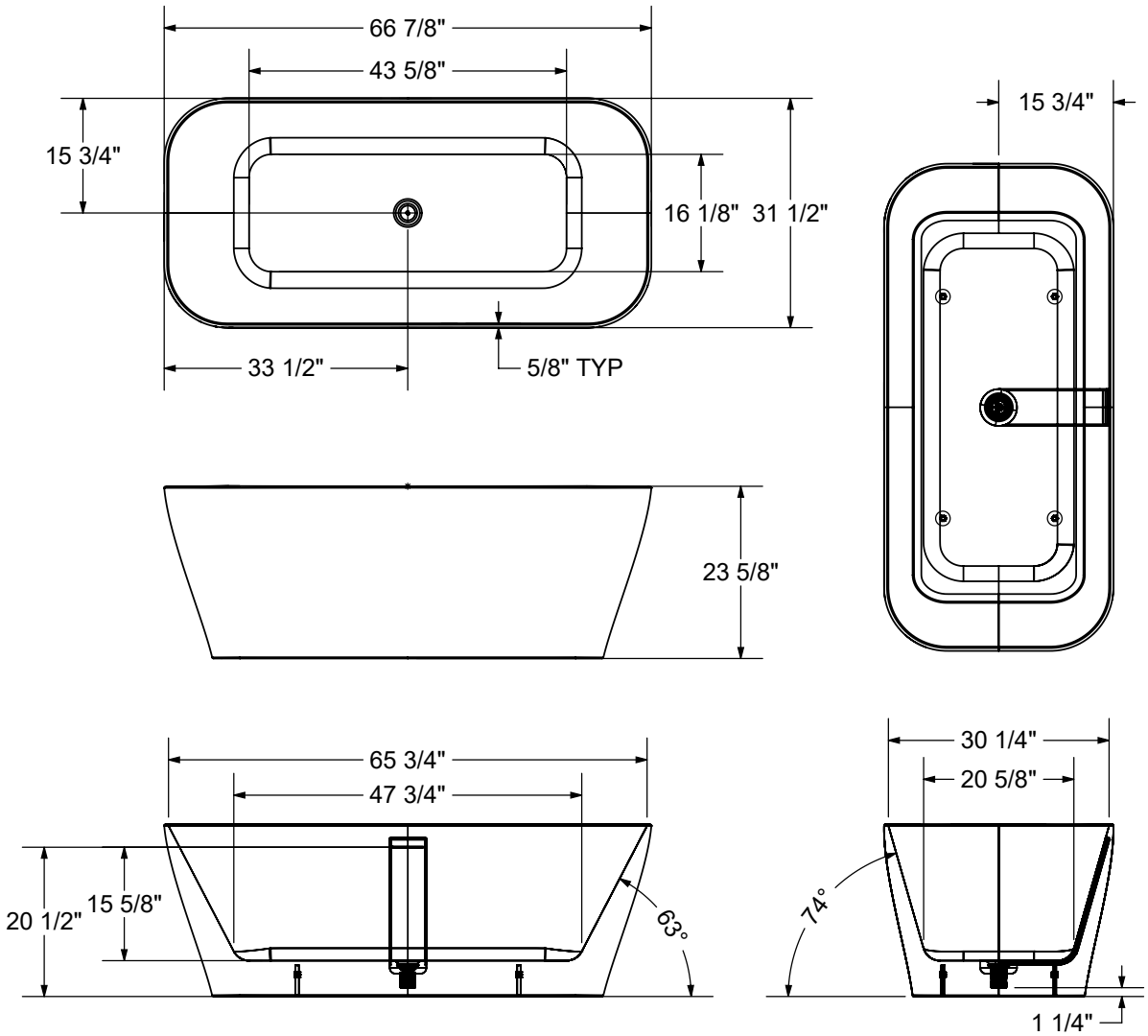

- All dimensions are approximate
- Structure measurements must be verified against the unit to ensure proper fit
- Installation to be completed in accordance with manufacturers specifications
- Do not scale drawings

Tori 5932

Material : Acrylic

Features

- Seamless 1-piece bathtub with a symmetrical look
- Trimless linear overflow and white pop-up drain to match any faucet finish
- Hygienic, non-porous acrylic surface for easy cleaning
- High gloss finish resistant to dulling, scratching, and fading
- 25-year limited warranty for your peace of mind
- 1-person bath designed for optimal comfort
- Waste and overflow included and pre-installed to save time on installation
- Comes with leveling legs for ease of installation
- Compatible with MAAX F2 Drain to save time and money on installation

TORI 5932 - 107828

SKU	System	Color	Configuration	Dimensions & Weight	Packaging	MSRP
107828-000-001-000	Soaker - No System	White	Center Drain	59 1/16” x 31 1/2” x 22 7/8” / 99 lb	28.81 ft^3	$ 2960

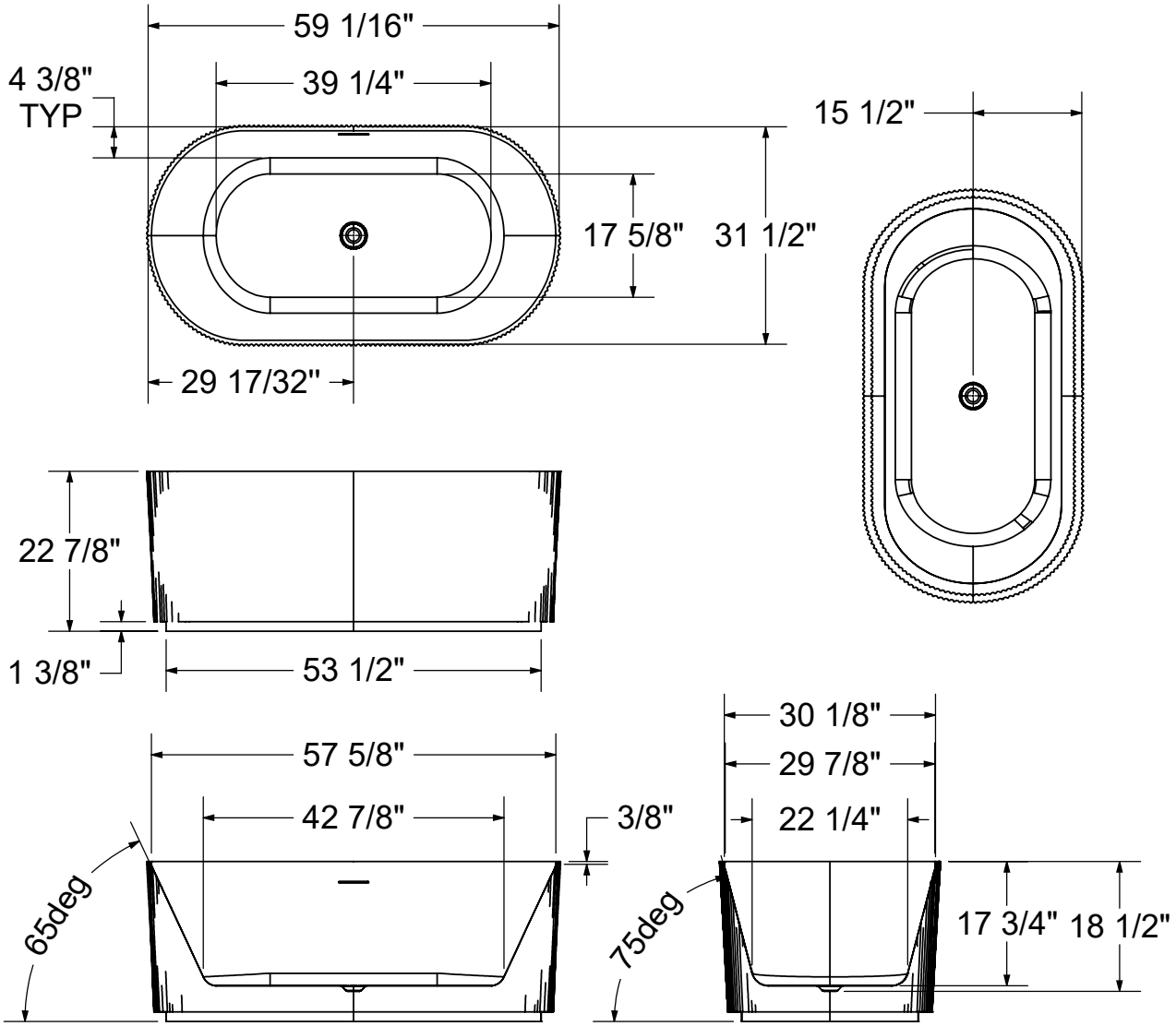

All dimensions are approximate. Structure measurements must be verified against the unit to ensure proper fit.

Go to Table of Contents

Tori 6732

Material : Acrylic

Features

- Seamless 1-piece bathtub with a symmetrical look
- Trimless linear overflow and white pop-up drain to match any faucet finish
- Hygienic, non-porous acrylic surface for easy cleaning
- High gloss finish resistant to dulling, scratching, and fading
- 25-year limited warranty for your peace of mind
- 2-person bath designed for optimal comfort
- Waste and overflow included and pre-installed to save time on installation
- Comes with leveling legs for ease of installation
- Compatible with MAAX F2 Drain to save time and money on installation

TORI 6732 - 107830

SKU	System	Color	Configuration	Dimensions & Weight	Packaging	MSRP
107830-000-001-000	Soaker - No System	White	Center Drain	67” x 31 1/2” x 22 3/4” / 110 lb	32.59 ft^3	$ 3198

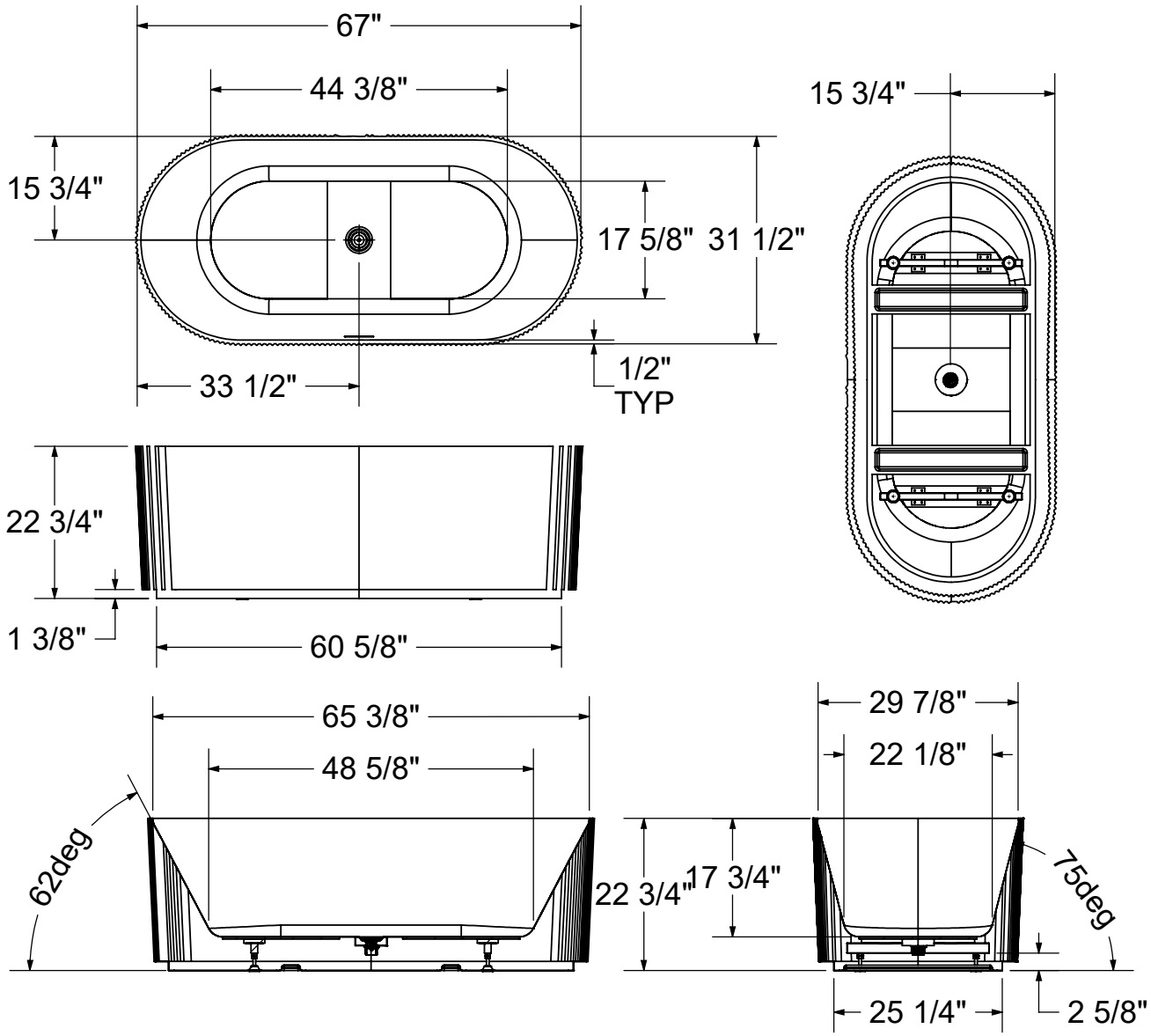

All dimensions are approximate. Structure measurements must be verified against the unit to ensure proper fit.

Go to Table of Contents

Tori Matte 5932

Material : Acrylic

Features

- Seamless 1-piece bathtub with a symmetrical look
- Trimless linear overflow and white pop-up drain to match any faucet finish
- Hygienic, non-porous acrylic surface for easy cleaning
- Matte finish enhances the bathtub's aesthetic appeal while providing a smooth, tactile surface
- 25-year limited warranty for your peace of mind
- 1-person bath designed for optimal comfort
- Waste and overflow included and pre-installed to save time on installation
- Comes with leveling legs for ease of installation
- Compatible with MAAX F2 Drain to save time and money on installation

TORI MATTE 5932 - 107829

SKU	System	Color	Configuration	Dimensions & Weight	Packaging	MSRP
107829-000-240-000	Soaker - No System	Matte White	Center Drain	59 1/16" x 31 1/2" x 22 7/8" / 99 lb	28.81 ft^3	$ 3066

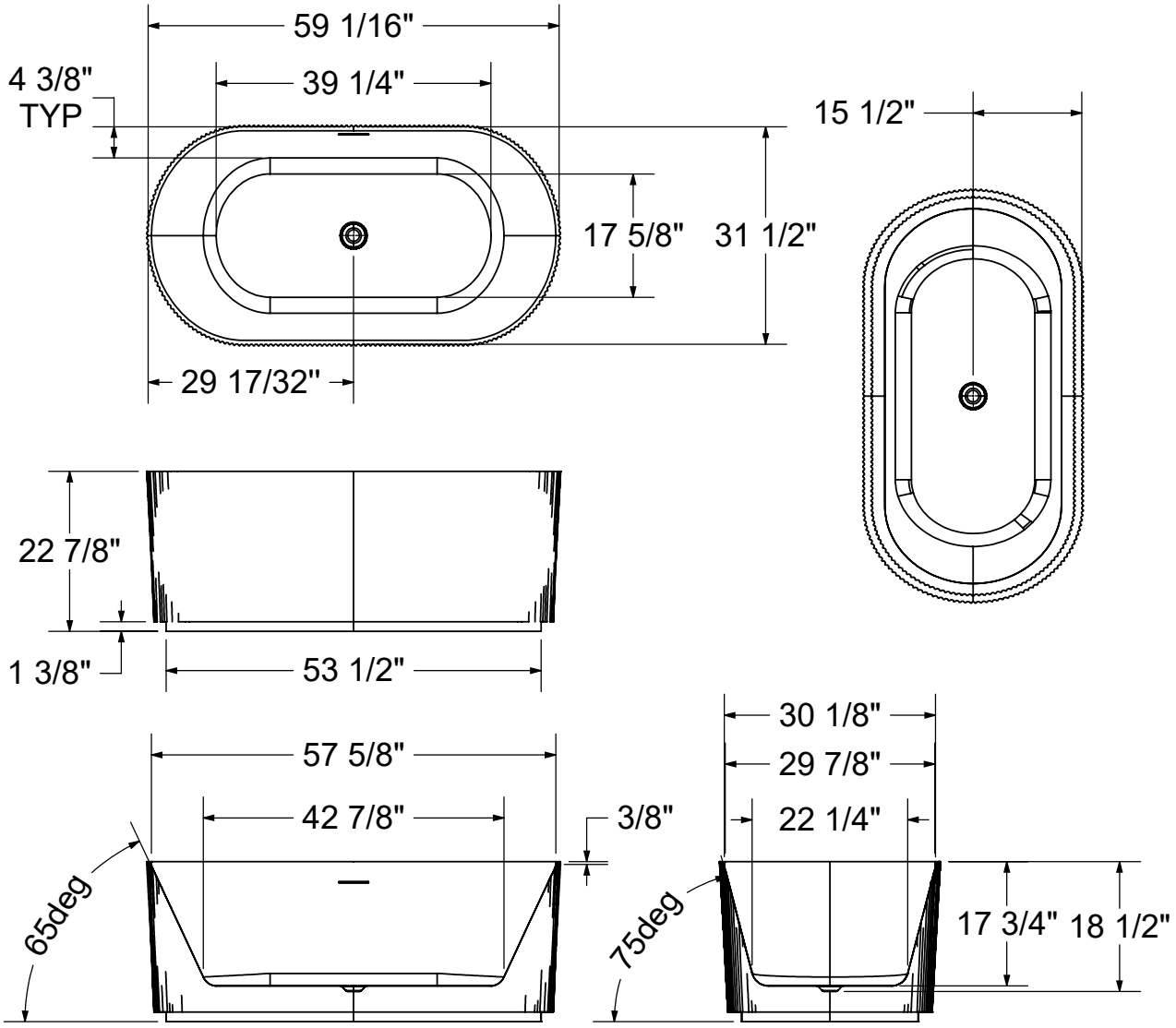

All dimensions are approximate. Structure measurements must be verified against the unit to ensure proper fit.

Go to Table of Contents

Tori Matte 6732

Material : Acrylic

Features

- Seamless 1-piece bathtub with a symmetrical look
- Trimless linear overflow and white pop-up drain to match any faucet finish
- Hygienic, non-porous acrylic surface for easy cleaning
- Matte finish enhances the bathtub's aesthetic appeal while providing a smooth, tactile surface
- 25-year limited warranty for your peace of mind
- 2-person bath designed for optimal comfort
- Waste and overflow included and pre-installed to save time on installation
- Comes with leveling legs for ease of installation
- Compatible with MAAX F2 Drain to save time and money on installation

TORI MATTE 6732 - 107831

SKU	System	Color	Configuration	Dimensions & Weight	Packaging	MSRP
107831-000-240-000	Soaker - No System	Matte White	Center Drain	67" x 31 1/2" x 22 3/4" / 110 lb	32.59 ft^3	$ 3382

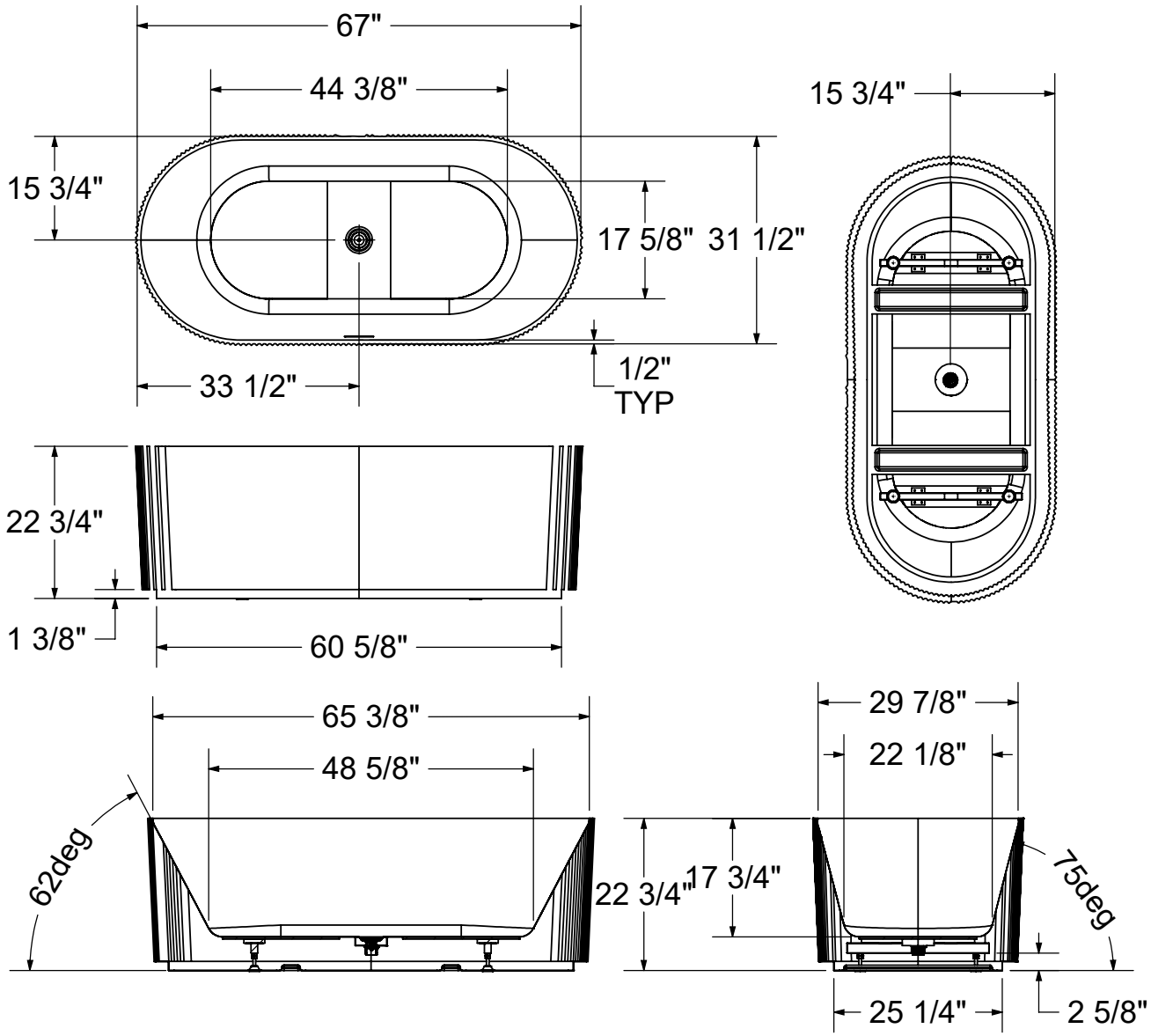

All dimensions are approximate. Structure measurements must be verified against the unit to ensure proper fit.

Go to Table of Contents

Tosca 5932

Material : Acrylic

Features

- Seamless 1-piece bathtub with a symmetrical look
- Large bathing well with comfortable backrests and center drain
- Linear waste and overflow (pre-installed)
- Available in matte or glossy finish with white or black apron
- F2 Drain compatible
- Leveling Legs
- Color-matched pop-up center drain

TOSCA 5932 - 106876

SKU	System	Color	Configuration	Dimensions & Weight	Packaging	MSRP
106876-000-001-000	Soaker - No System	White	Center Drain	59” x 31 1/2” x 23 5/8” / 90.2 lb	32.95 ft^3	$ 3051
106876-000-001-100		Black				$ 3051

ACCESSORIES

SKU	Description	MSRP
10032754	F^2 Drain kit for high-rise construction for freestanding bathtub installation (sold separately) Respects National Building Code of Canada (CAN/ULC-S102.2 flame and smoke protection) for high rise construction Minimum space required for assembly is 10 3/8 inches Compatible exclusively with MAAX freestanding bathtubs.	$ 402
10032757	F^2 Drain - Pack of 12 ABS kits for freestanding bathtub installation (sold separately) Minimum space required for assembly is 10 3/8 inches Compatible exclusively with MAAX freestanding bathtubs.	$ 2710

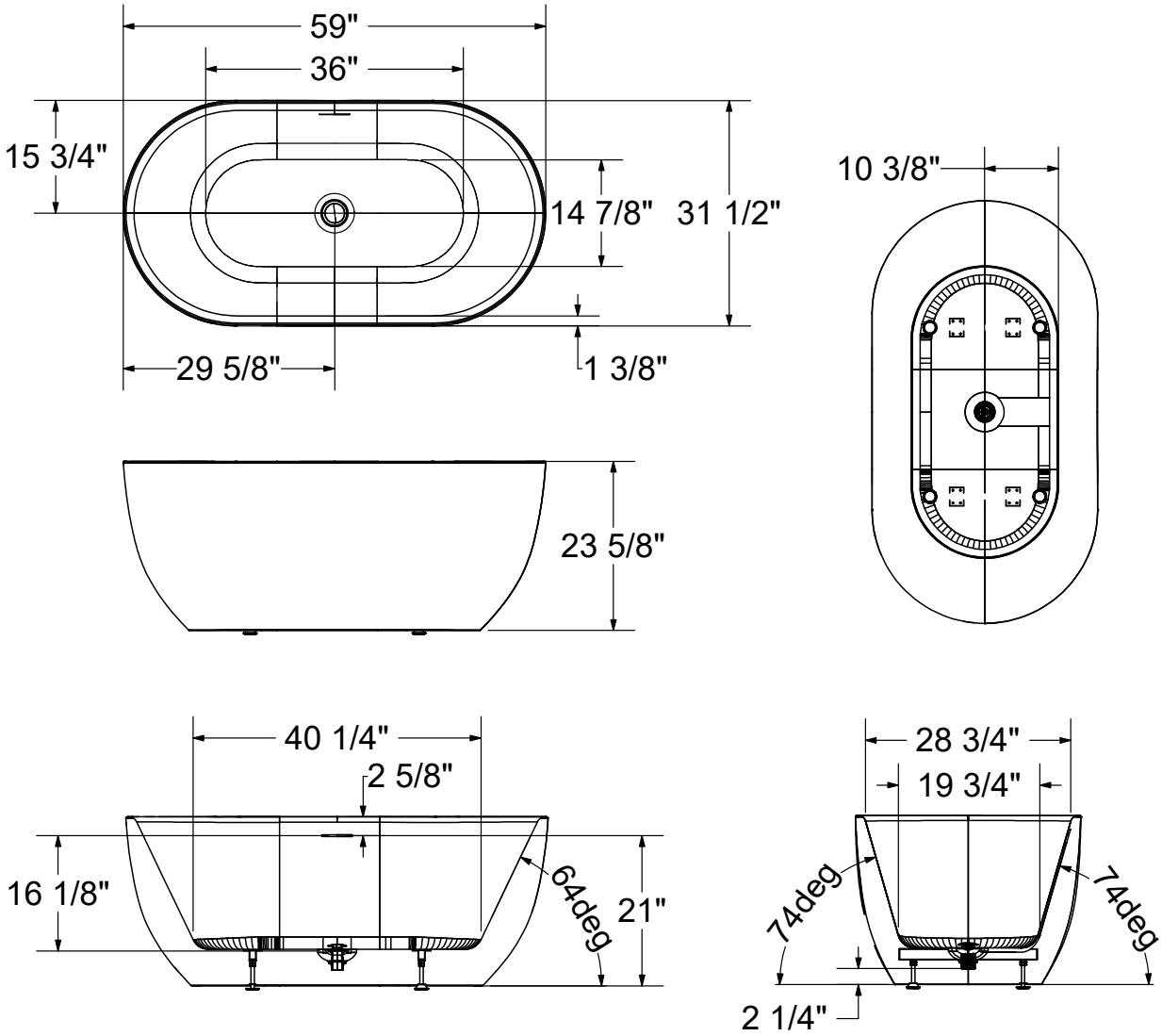

All dimensions are approximate. Structure measurements must be verified against the unit to ensure proper fit.

Tosca 6732

Material : Acrylic

Features

- Seamless 1-piece bathtub with a symmetrical look
- Large bathing well with comfortable backrests and center drain
- Linear waste and overflow (pre-installed)
- Available in matte or glossy finish with white or black apron
- F2 Drain compatible
- Leveling Legs
- Color-matched pop-up center drain

TOSCA 6732 - 106878

SKU	System	Color	Configuration	Dimensions & Weight	Packaging	MSRP
106878-000-001-000	Soaker - No System	White	Center Drain	67” x 31 1/2” x 23 5/8” / 101.2 lb	0 ft^3	$ 3559
106878-000-001-100		Black				$ 3559

ACCESSORIES

SKU	Description	MSRP
10032754	F^2 Drain kit for high-rise construction for freestanding bathtub installation (sold separately) Respects National Building Code of Canada (CAN/ULC-S102.2 flame and smoke protection) for high rise construction Minimum space required for assembly is 10 3/8 inches Compatible exclusively with MAAX freestanding bathtubs.	$ 402
10032757	F^2 Drain - Pack of 12 ABS kits for freestanding bathtub installation (sold separately) Minimum space required for assembly is 10 3/8 inches Compatible exclusively with MAAX freestanding bathtubs.	$ 2710

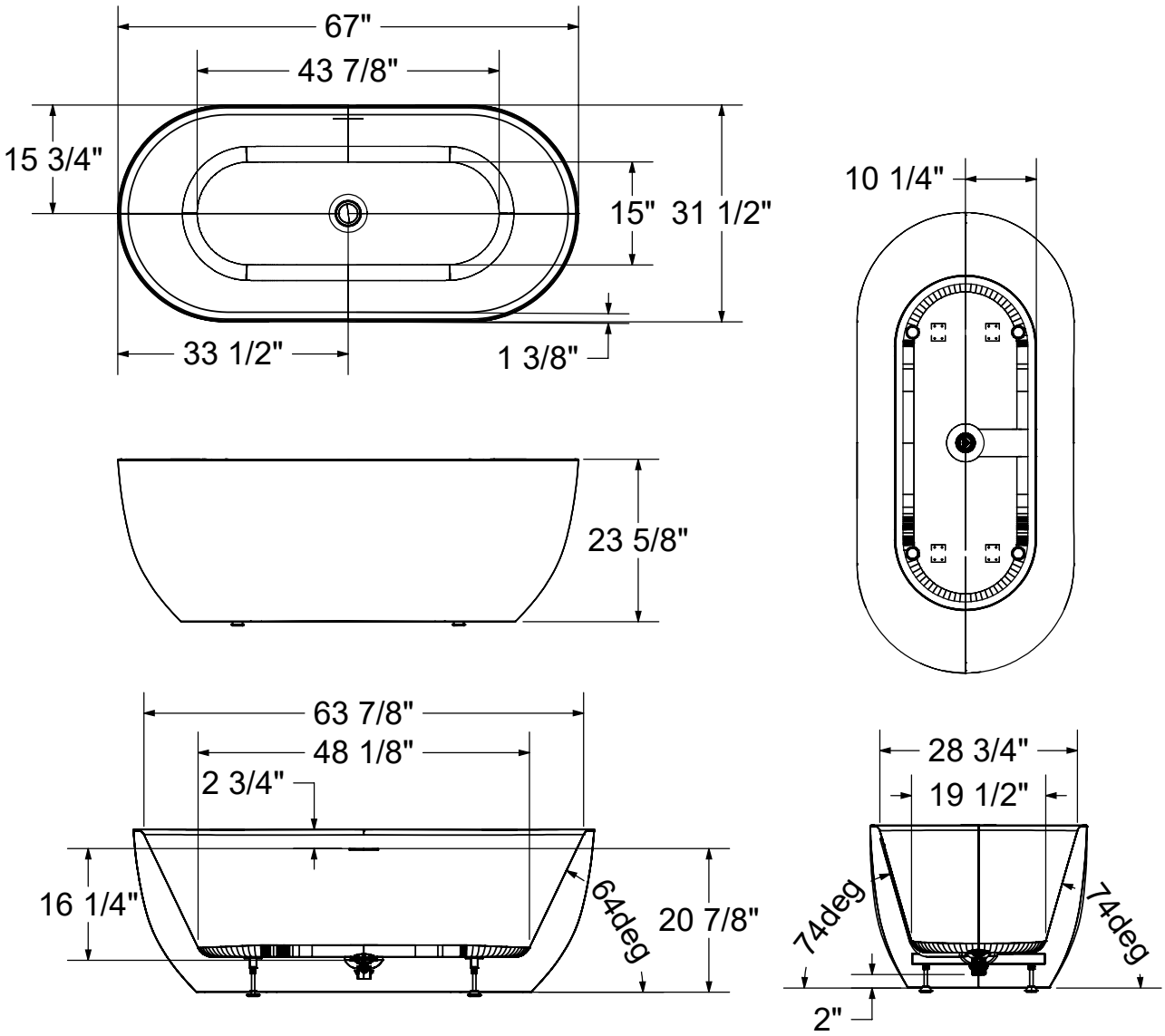

All dimensions are approximate. Structure measurements must be verified against the unit to ensure proper fit.

Go to Table of Contents

Tosca Matte 5932

Material : Acrylic

Features

- Interior bathing well features a matching matte finish for an elegant seamless look.
- Seamless 1-piece bathtub with a symmetrical look
- Large bathing well with comfortable backrests and center drain
- Linear waste and overflow (pre-installed)
- Available in matte or glossy finish with white or black apron
- F2 Drain compatible
- Leveling Legs
- Color-matched pop-up center drain

TOSCA MATTE 5932 - 106877

SKU	System	Color	Configuration	Dimensions & Weight	Packaging	MSRP
106877-000-240-000	Soaker - No System	Matte White	Center Drain	59” x 31 1/2” x 23 5/8” / 90.2 lb	32.95 ft^3	$ 3355
106877-000-240-100		Matte Black				$ 3355

ACCESSORIES

SKU	Description	MSRP
10032754	F^2 Drain kit for high-rise construction for freestanding bathtub installation (sold separately) Respects National Building Code of Canada (CAN/ULC-S102.2 flame and smoke protection) for high rise construction Minimum space required for assembly is 10 3/8 inches Compatible exclusively with MAAX freestanding bathtubs.	$ 402
10032757	F^2 Drain - Pack of 12 ABS kits for freestanding bathtub installation (sold separately) Minimum space required for assembly is 10 3/8 inches Compatible exclusively with MAAX freestanding bathtubs.	$ 2710

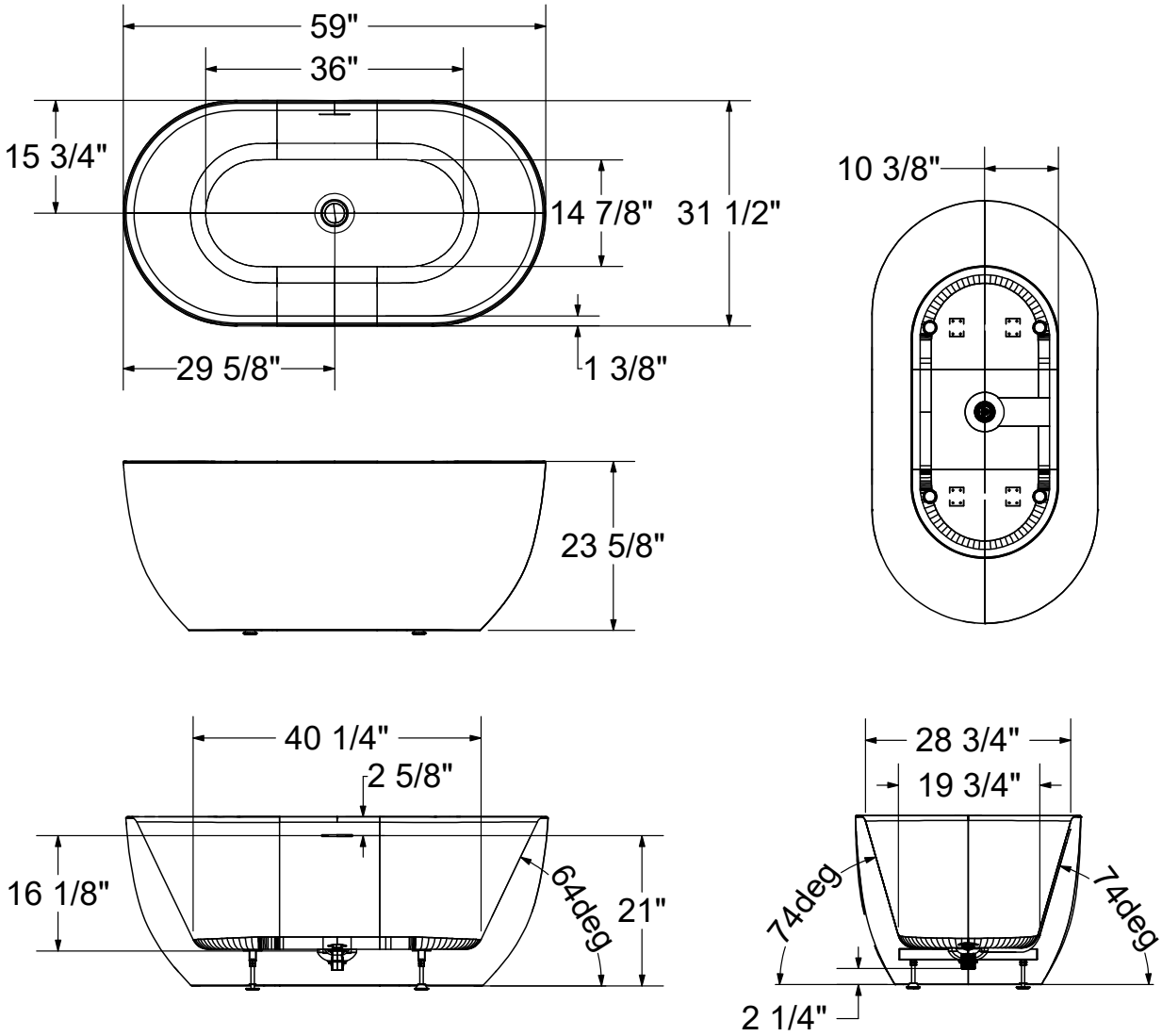

All dimensions are approximate. Structure measurements must be verified against the unit to ensure proper fit.

Tosca Matte 6732

Material : Acrylic

Features

- Interior bathing well features a matching matte finish for an elegant seamless look.
- Seamless 1-piece bathtub with a symmetrical look
- Large bathing well with comfortable backrests and center drain
- Linear waste and overflow (pre-installed)
- Available in matte or glossy finish with white or black apron
- F2 Drain compatible
- Leveling Legs
- Color-matched pop-up center drain

TOSCA MATTE 6732 - 106879

SKU	System	Color	Configuration	Dimensions & Weight	Packaging	MSRP
106879-000-240-000	Soaker - No System	Matte White	Center Drain	67” x 31 1/2” x 23 5/8” / 101.2 lb	37.2 ft^3	$ 3914
106879-000-240-100		Matte Black				$ 3914

ACCESSORIES

SKU	Description	MSRP
10032754	F^2 Drain kit for high-rise construction for freestanding bathtub installation (sold separately) Respects National Building Code of Canada (CAN/ULC-S102.2 flame and smoke protection) for high rise construction Minimum space required for assembly is 10 3/8 inches Compatible exclusively with MAAX freestanding bathtubs.	$ 402
10032757	F^2 Drain - Pack of 12 ABS kits for freestanding bathtub installation (sold separately) Minimum space required for assembly is 10 3/8 inches Compatible exclusively with MAAX freestanding bathtubs.	$ 2710

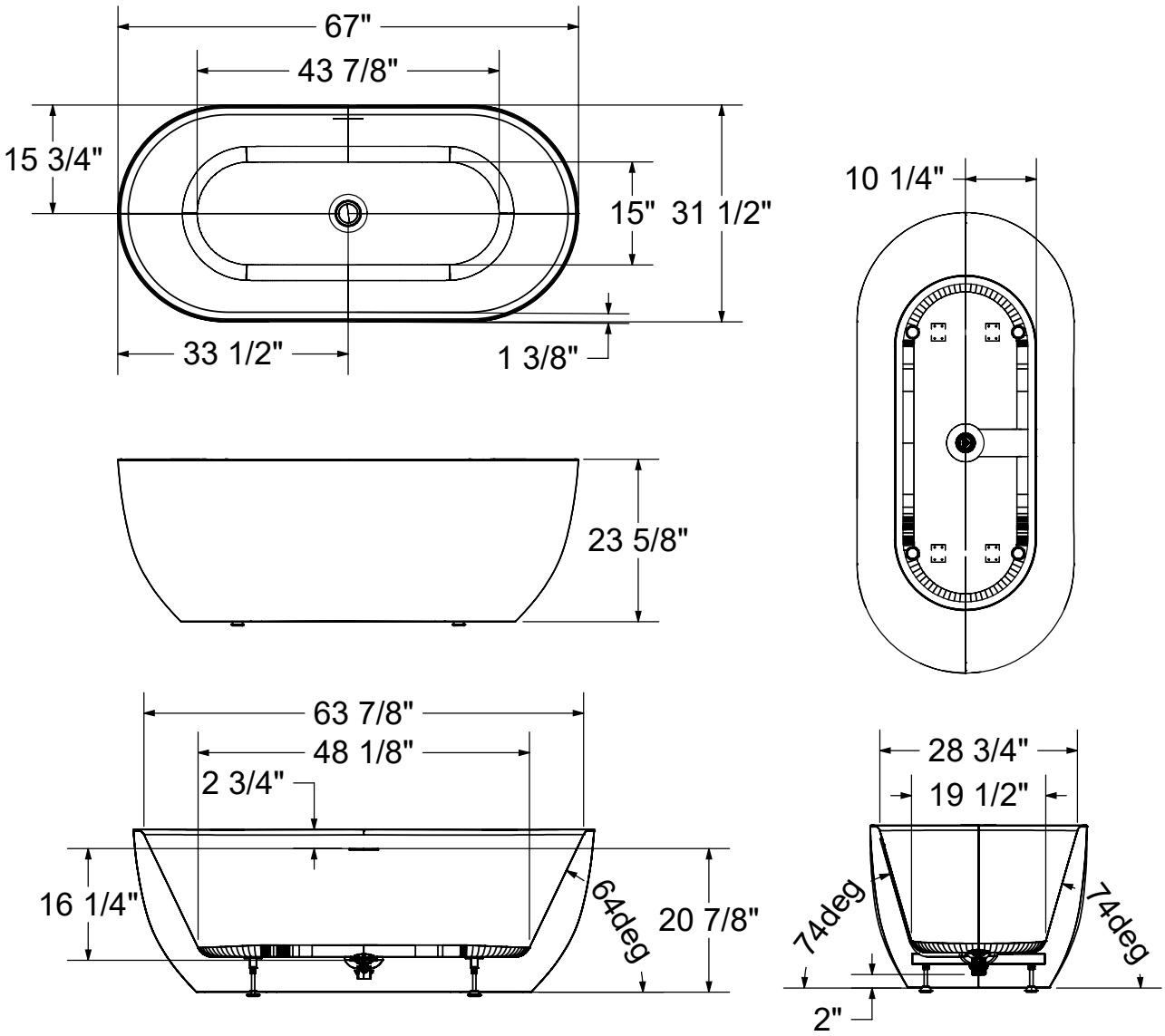

All dimensions are approximate. Structure measurements must be verified against the unit to ensure proper fit.

Go to Table of Contents

Valentina 6731

Material : Acrylic

Features

- Above-the-floor rough (AFR) to allow for easy plumbing installation without having to relocate the existing drain
- Compatible with MAAX F2 Drain to save time and money on installation
- Comes with MAAX innovative leveling legs for ease of installation
- Seamless 1-piece bathtub for reliable water containment
- Waste and overflow included and pre-installed to save time on installation
- Trimless linear overflow for versatility
- Acrylic surface resistant to stains
- 2-person bath with maximized bathing well designed for optimal comfort
- The matte finish enhances the bathtub's aesthetic appeal while providing a smooth, tactile surface

VALENTINA - 107174

SKU	System	Color	Configuration	Dimensions & Weight	Packaging	MSRP
107174-000-240-000	Soaker - No System	Matte White	Center Drain	66 7/8" x 31 1/2" x 23 1/2" / 95 lb	78.97 ft^3	$ 4109

ACCESSORIES

SKU	Description	MSRP
10032757	F^2 Drain - Pack of 12 ABS kits for freestanding bathtub installation (sold separately) Minimum space required for assembly is 10 3/8 inches Compatible exclusively with MAAX freestanding bathtubs.	$ 2710

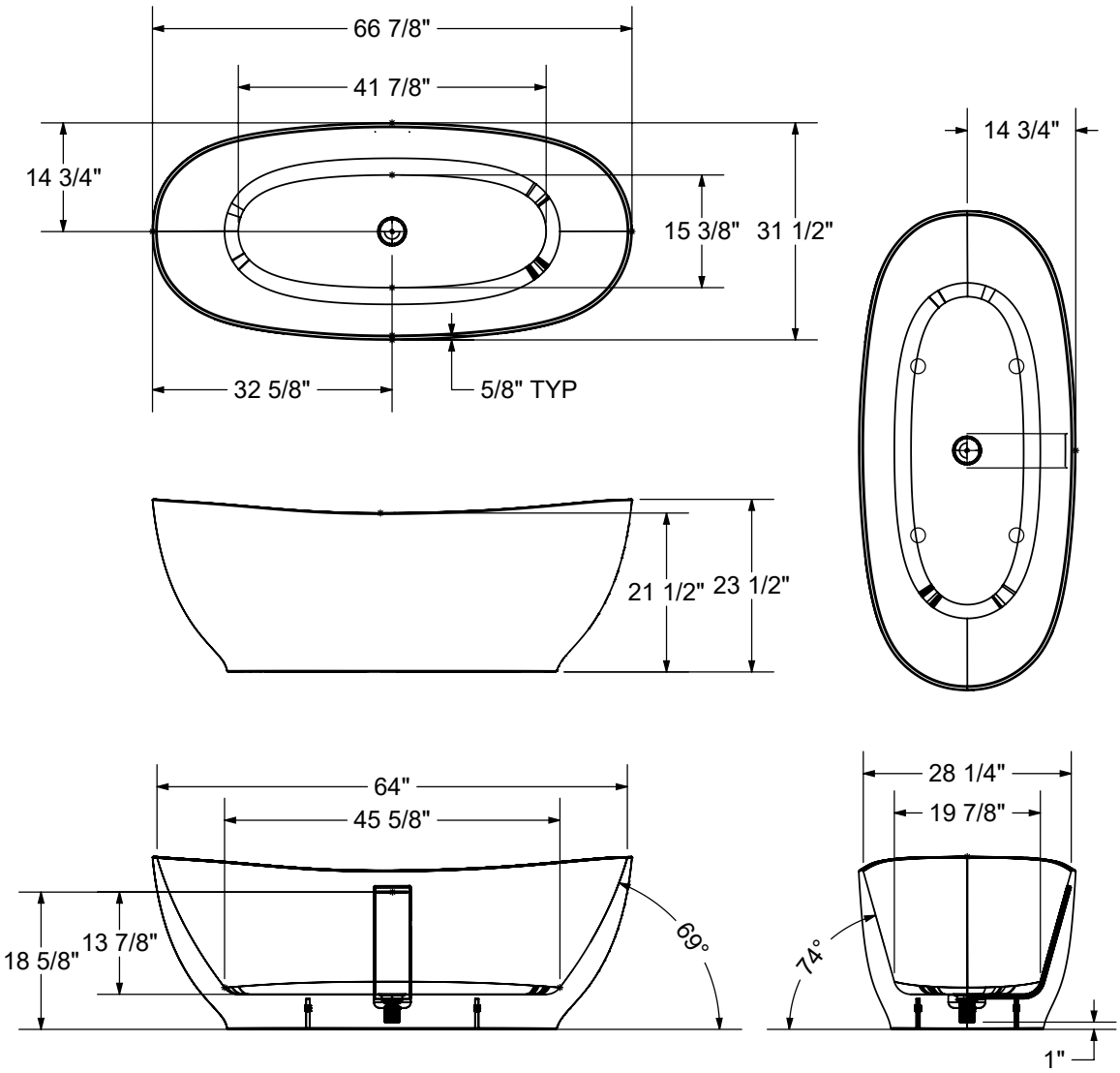

- **All dimensions are approximate**
- **Structure measurements must be verified against the unit to ensure proper fit**
- **Installation to be completed in accordance with manufacturers specifications**
- **Do not scale drawings**

Villi

Material : Acrylic

Features

- Compatible with MAAX F2 Drain to save time and money on installation
- Comes with MAAX innovative leveling legs for ease of installation
- Seamless 1-piece bathtub for reliable water containment
- Linear overflow in chrome and unique hidden drain included and pre-installed to save time on installation
- 25-year limited warranty for your peace of mind
- Acrylic surface resistant to stains
- 2-person bath with maximized bathing well designed for optimal comfort
- High gloss finish resistant to dulling, scratching, and fading

VILLI - 106388

SKU	System	Color	Configuration	Dimensions & Weight	Packaging	MSRP
106388-000-001-000	Soaker - No System	White	Center Drain	65” x 32” x 25 3/4” / 132 lb	36 ft^3	$ 3729

COMMON OPTIONS

SKU	Description	MSRP
OPT20261-105	Linear overflow metal trim Available colors: White **(002)**, Brushed Nickel **(105)**, Dark Bronze **(173)** and Matte Black **(340)**	$ 103
OPT20261-002		$ 103
OPT20261-173		$ 103
OPT20261-340		$ 103

ACCESSORIES

SKU	Description	MSRP
10032754	F^2 Drain kit for high-rise construction for freestanding bathtub installation (sold separately) Respects National Building Code of Canada (CAN/ULC-S102.2 flame and smoke protection) for high rise construction Minimum space required for assembly is 10 3/8 inches Compatible exclusively with MAAX freestanding bathtubs.	$ 402
10032757	F^2 Drain - Pack of 12 ABS kits for freestanding bathtub installation (sold separately) Minimum space required for assembly is 10 3/8 inches Compatible exclusively with MAAX freestanding bathtubs.	$ 2710
10037680-001	White hidden drain cover Available colors: White **(001)**	$ 387

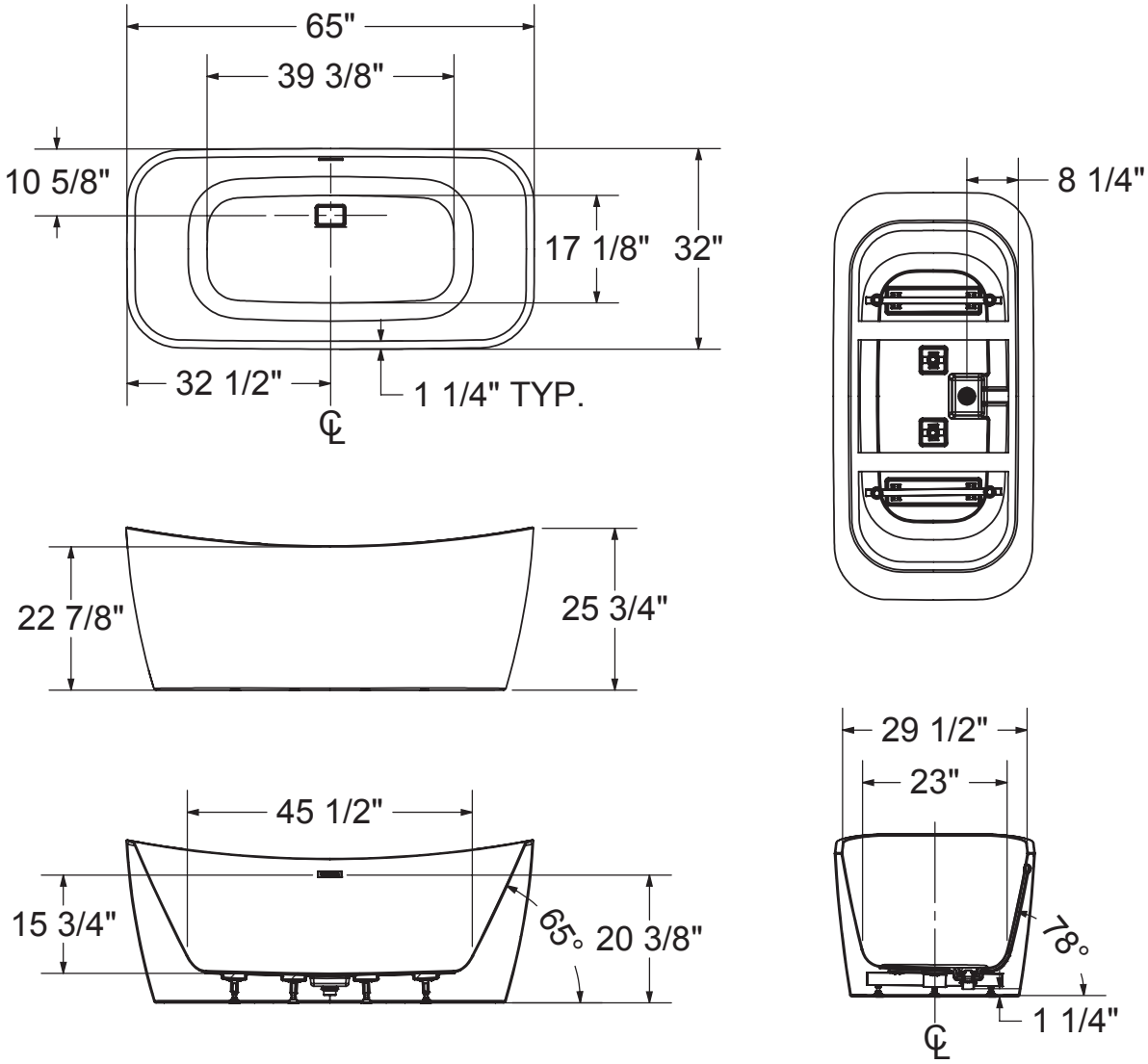

All dimensions are approximate. Structure measurements must be verified against the unit to ensure proper fit.

Go to Table of Contents

Chorale 6030

Material : Acrylic

Features

- Seamless 1-piece minimalist and versatile design to fit any bathroom style
- Trimless linear overflow and white pop-up drain to match any faucet finish
- Hygienic, non-porous acrylic surface for easy cleaning
- High gloss finish resistant to dulling, scratching, and fading
- 25-year limited warranty for your peace of mind
- 1-person bath with maximized bathing well designed for optimal comfort
- Waste and overflow included and pre-installed to save time on installation
- Comes with leveling legs for ease of installation
- Compatible with MAAX F2 Drain to save time and money on installation

CHORALE 6030 - 107675

SKU	System	Color	Configuration	Dimensions & Weight	Packaging	MSRP
107675-000-001-000	Soaker - No System	White	Center Drain	59 3/4” x 29 3/8” x 23 5/8” / 74.8 lb	35.16 ft^3	$ 2739
107675-000-001-100		Black				$ 2739

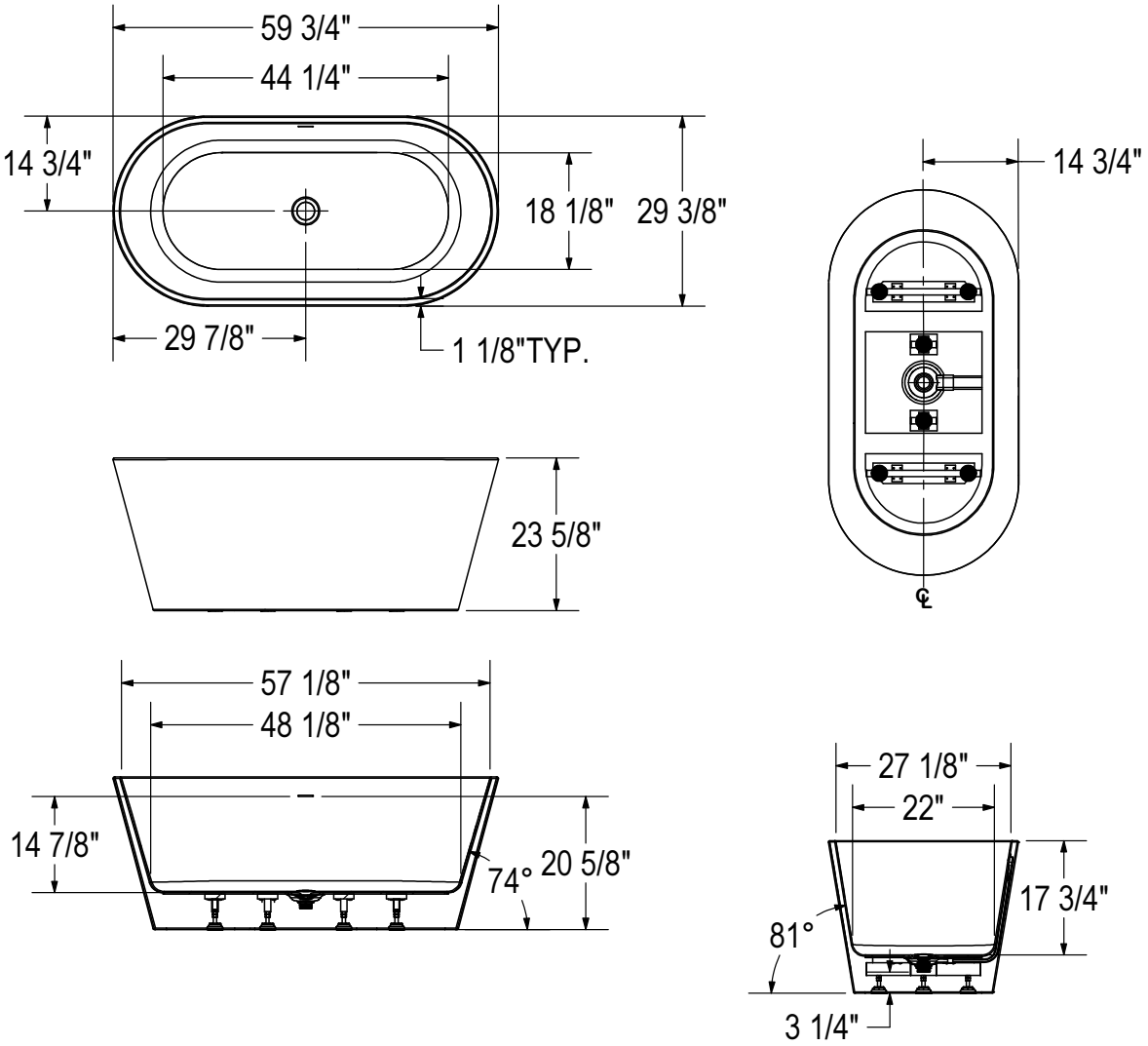

All dimensions are approximate. Structure measurements must be verified against the unit to ensure proper fit.

Go to Table of Contents

Chorale 6731

Material : Acrylic

Features

- Seamless 1-piece minimalist and versatile design to fit any bathroom style
- Trimless linear overflow and white pop-up drain to match any faucet finish
- Hygienic, non-porous acrylic surface for easy cleaning
- High gloss finish resistant to dulling, scratching, and fading
- 25-year limited warranty for your peace of mind
- 2-person bath with maximized bathing well designed for optimal comfort
- Waste and overflow included and pre-installed to save time on installation
- Comes with leveling legs for ease of installation
- Compatible with MAAX F2 Drain to save time and money on installation

CHORALE 6731 - 107674

SKU	System	Color	Configuration	Dimensions & Weight	Packaging	MSRP
107674-000-001-000	Soaker - No System	White	Center Drain	66 3/4” x 30 5/8” x 22 7/8” / 132 lb	40.56 ft^3	$ 3301
107674-000-001-100		Black				$ 3301

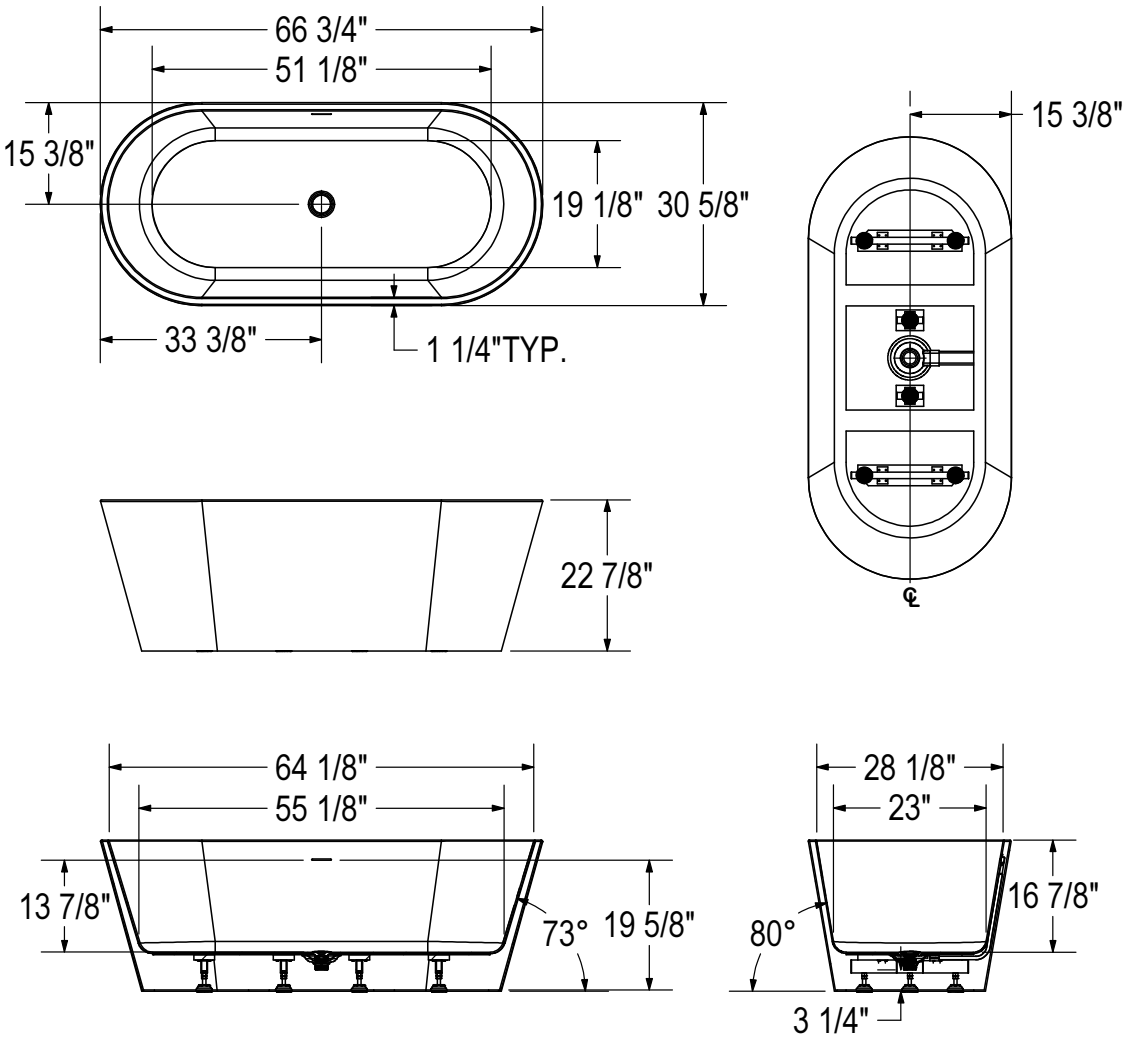

All dimensions are approximate. Structure measurements must be verified against the unit to ensure proper fit.

Go to Table of Contents

Louie 5829

Material : Acrylic

Features

- Freestanding bathtub
- Acrylic surface resistant to stains
- MAAX innovative leveling legs for easy installation
- Compatible with MAAX F2 Drain connector to save time and money on installation
- Seamless 1-piece bathtub with a symmetrical look
- High gloss finish resistant to dulling, scratching, and fading
- Deep soak bathing for ultimate relaxation
- Pre-installed linear overflow and waste drain in chrome
- Available in central drain configurations only

LOUIE 5829 - 106384

SKU	System	Color	Configuration	Dimensions & Weight	Packaging	MSRP
106384-000-001-000	Soaker - No System	White	Center Drain	58 1/4” x 28 7/8” x 22 7/8” / 119 lb	31 ft^3	$ 2828

COMMON OPTIONS

SKU	Description	MSRP
OPT20260-105	Linear overflow and waste metal trim kit Available colors: White **(002)**, Brushed Nickel **(105)**, Dark Bronze **(173)** and Matte Black **(340)**	$ 300
OPT20260-002		$ 300
OPT20260-340		$ 300
OPT20260-173		$ 300

ACCESSORIES

SKU	Description	MSRP
10032754	F^2 Drain kit for high-rise construction for freestanding bathtub installation (sold separately) Respects National Building Code of Canada (CAN/ULC-S102.2 flame and smoke protection) for high rise construction Minimum space required for assembly is 10 3/8 inches Compatible exclusively with MAAX freestanding bathtubs.	$ 402
10032757	F^2 Drain - Pack of 12 ABS kits for freestanding bathtub installation (sold separately) Minimum space required for assembly is 10 3/8 inches Compatible exclusively with MAAX freestanding bathtubs.	$ 2710
10037678-084	Round waste metal trim Available colors: White **(002)**, Chrome **(084)**, Brushed Nickel **(105)**, Dark Bronze **(173)** and Matte Black **(340)**	$ 203

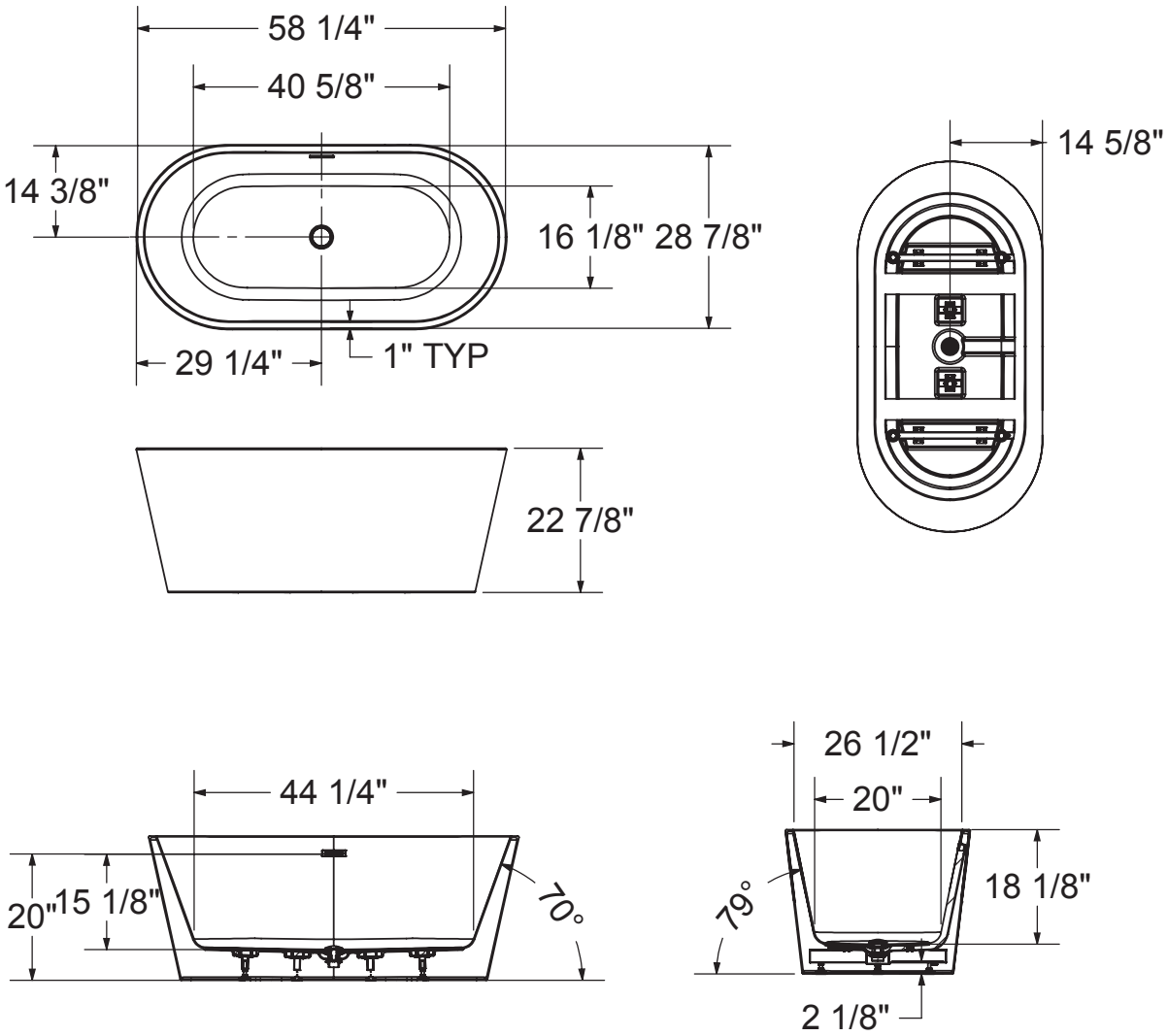

All dimensions are approximate. Structure measurements must be verified against the unit to ensure proper fit.

Louie 6731

Material : Acrylic

Features

- Seamless 1-piece bathtub with symmetrical look
- Maximised bathing well with comfortable backrests and center drain
- Linear overflow and waste in chrome (pre-installed)
- F² Drain compatible
- MAAX innovative leveling legs for easy installation
- Offered only in white with optional trim finishes available

LOUIE 6731 - 106385

SKU	System	Color	Configuration	Dimensions & Weight	Packaging	MSRP
106385-000-001-000	Soaker - No System	White	Center Drain	66 7/8” x 31 1/4” x 23” / 106 lb	0 ft^3	$ 3301

COMMON OPTIONS

SKU	Description	MSRP
OPT20260-105	Linear overflow and waste metal trim kit Available colors: White **(002)**, Brushed Nickel **(105)**, Dark Bronze **(173)** and Matte Black **(340)**	$ 300
OPT20260-002		$ 300
OPT20260-340		$ 300
OPT20260-173		$ 300

ACCESSORIES

SKU	Description	MSRP
10032754	F² Drain kit for high-rise construction for freestanding bathtub installation (sold separately) Respects National Building Code of Canada (CAN/ULC-S102.2 flame and smoke protection) for high rise construction Minimum space required for assembly is 10 3/8 inches Compatible exclusively with MAAX freestanding bathtubs.	$ 402
10032757	F² Drain - Pack of 12 ABS kits for freestanding bathtub installation (sold separately) Minimum space required for assembly is 10 3/8 inches Compatible exclusively with MAAX freestanding bathtubs.	$ 2710
10037678-084	Round waste metal trim Available colors: White **(002)**, Chrome **(084)**, Brushed Nickel **(105)**, Dark Bronze **(173)** and Matte Black **(340)**	$ 203

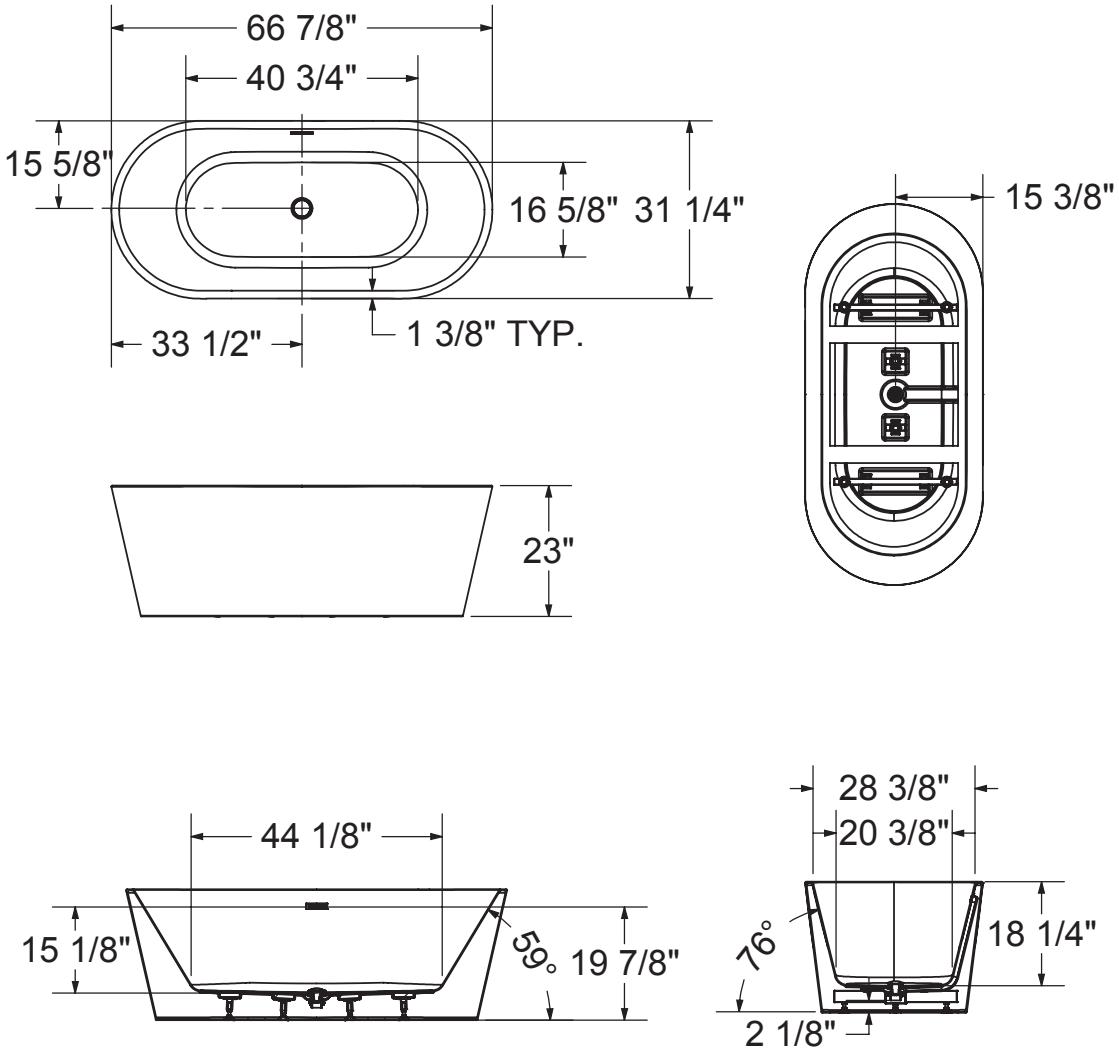

All dimensions are approximate. Structure measurements must be verified against the unit to ensure proper fit.

Malibra 6730

Material : Acrylic

Features

- Seamless 1-piece minimalist and versatile design to fit any bathroom style
- Trimless linear overflow and white pop-up drain to match any faucet finish
- Hygienic, non-porous acrylic surface for easy cleaning
- High gloss finish resistant to dulling, scratching, and fading
- 25-year limited warranty for your peace of mind
- 2-person bath with maximized bathing well designed for optimal comfort
- Waste and overflow included and pre-installed to save time on installation
- Comes with leveling legs for ease of installation
- Compatible with MAAX F2 Drain to save time and money on installation

MALIBRA 6730 - 107678

SKU	System	Color	Configuration	Dimensions & Weight	Packaging	MSRP
107678-000-001-000	Soaker - No System	White	Center Drain	66 7/8” x 30 1/4” x 23 5/8” / 107.8 lb	39.13 ft^3	$ 3466

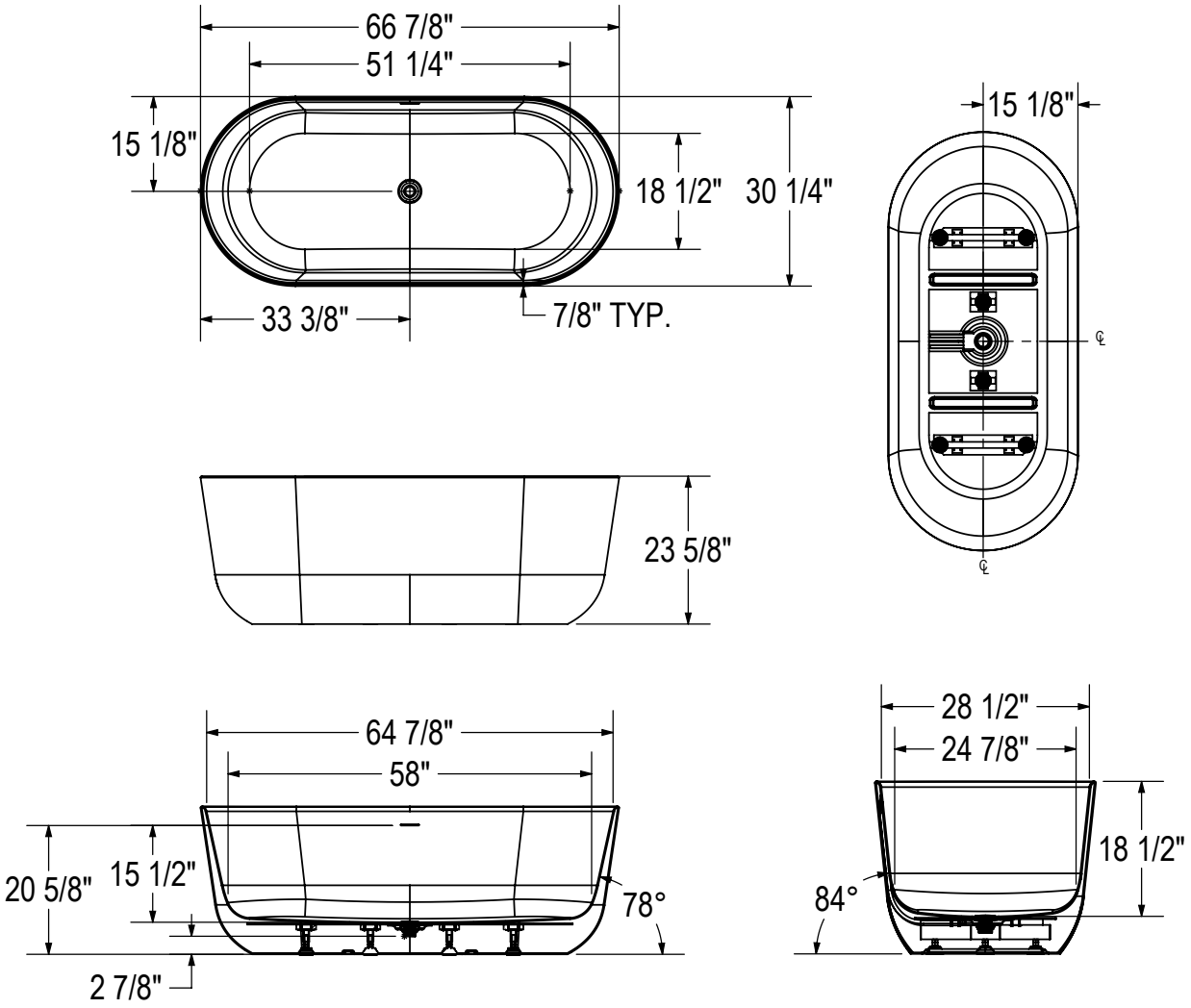

All dimensions are approximate. Structure measurements must be verified against the unit to ensure proper fit.

Mirella 6029

Material : Acrylic

Features

- Seamless 1-piece minimalist and versatile design to fit any bathroom style
- Trimless linear overflow and white pop-up drain to match any faucet finish
- Hygienic, non-porous acrylic surface for easy cleaning
- High gloss finish resistant to dulling, scratching, and fading
- 25-year limited warranty for your peace of mind
- 1-person bath with maximized bathing well designed for optimal comfort
- Waste and overflow included and pre-installed to save time on installation
- Comes with leveling legs for ease of installation
- Compatible with MAAX F2 Drain to save time and money on installation

MIRELLA 6029 - 107676

SKU	System	Color	Configuration	Dimensions & Weight	Packaging	MSRP
107676-000-001-000	Soaker - No System	White	Center Drain	59 3/4” x 28 5/8” x 26 3/8” / 74.8 lb	38.32 ft^3	$ 2739

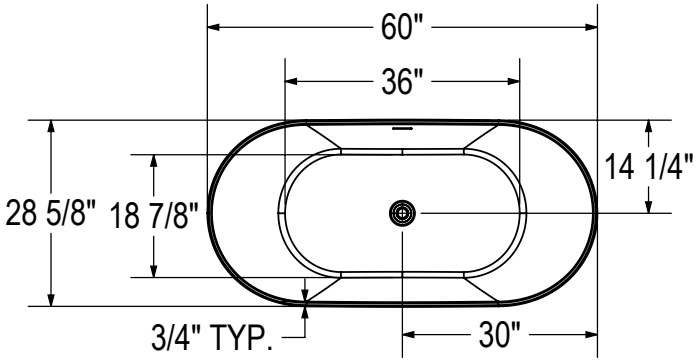

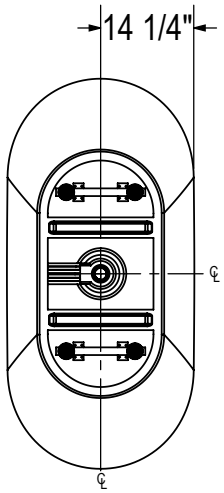

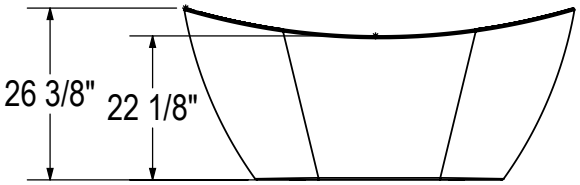

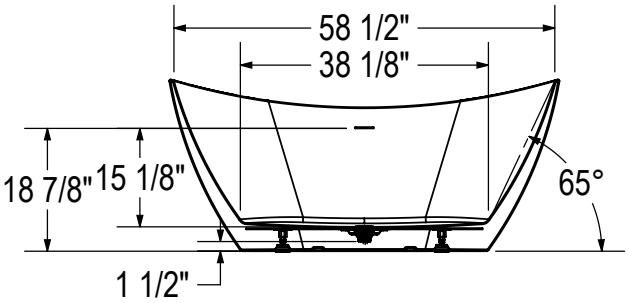

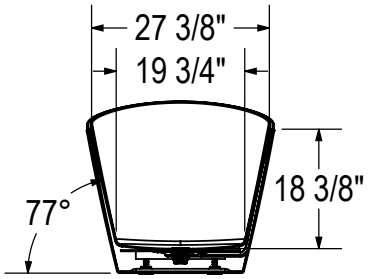

All dimensions are approximate. Structure measurements must be verified against the unit to ensure proper fit.

Mirella 6729

Material : Acrylic

Features

- Seamless 1-piece minimalist and versatile design to fit any bathroom style
- Trimless linear overflow and white pop-up drain to match any faucet finish
- Hygienic, non-porous acrylic surface for easy cleaning
- High gloss finish resistant to dulling, scratching, and fading
- 25-year limited warranty for your peace of mind
- 2-person bath with maximized bathing well designed for optimal comfort
- Waste and overflow included and pre-installed to save time on installation
- Comes with leveling legs for ease of installation
- Compatible with MAAX F2 Drain to save time and money on installation

MIRELLA 6729 - 107677

SKU	System	Color	Configuration	Dimensions & Weight	Packaging	MSRP
107677-000-001-000	Soaker - No System	White	Center Drain	66 7/8” x 28 1/2” x 26 3/8” / 101.2 lb	42.65 ft^3	$ 3301

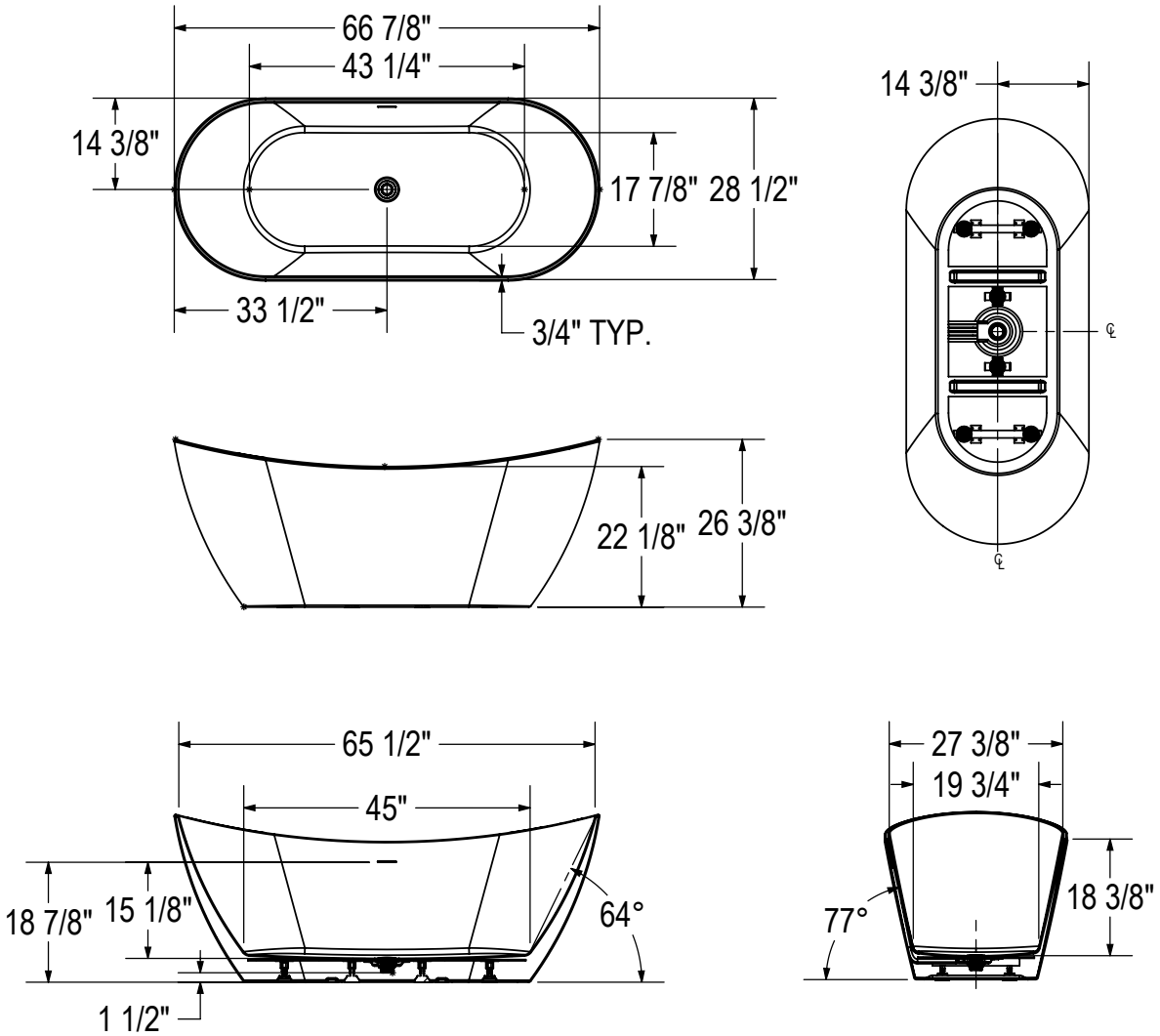

All dimensions are approximate. Structure measurements must be verified against the unit to ensure proper fit.

Go to Table of Contents

Nota 6731

Material : Acrylic

Features

- Seamless 1-piece minimalist and versatile design to fit any bathroom style
- Trimless linear overflow and white pop-up drain to match any faucet finish
- Hygienic, non-porous acrylic surface for easy cleaning
- High gloss finish resistant to dulling, scratching, and fading
- 25-year limited warranty for your peace of mind
- 2-person bath with maximized bathing well designed for optimal comfort
- Waste and overflow included and pre-installed to save time on installation
- Comes with leveling legs for ease of installation
- Compatible with MAAX F2 Drain to save time and money on installation

NOTA 6731 - 107679

SKU	System	Color	Configuration	Dimensions & Weight	Packaging	MSRP
107679-000-001-000	Soaker - No System	White	Center Drain	66 7/8” x 31 1/2” x 22 7/8” / 132 lb	40.56 ft^3	$ 3530

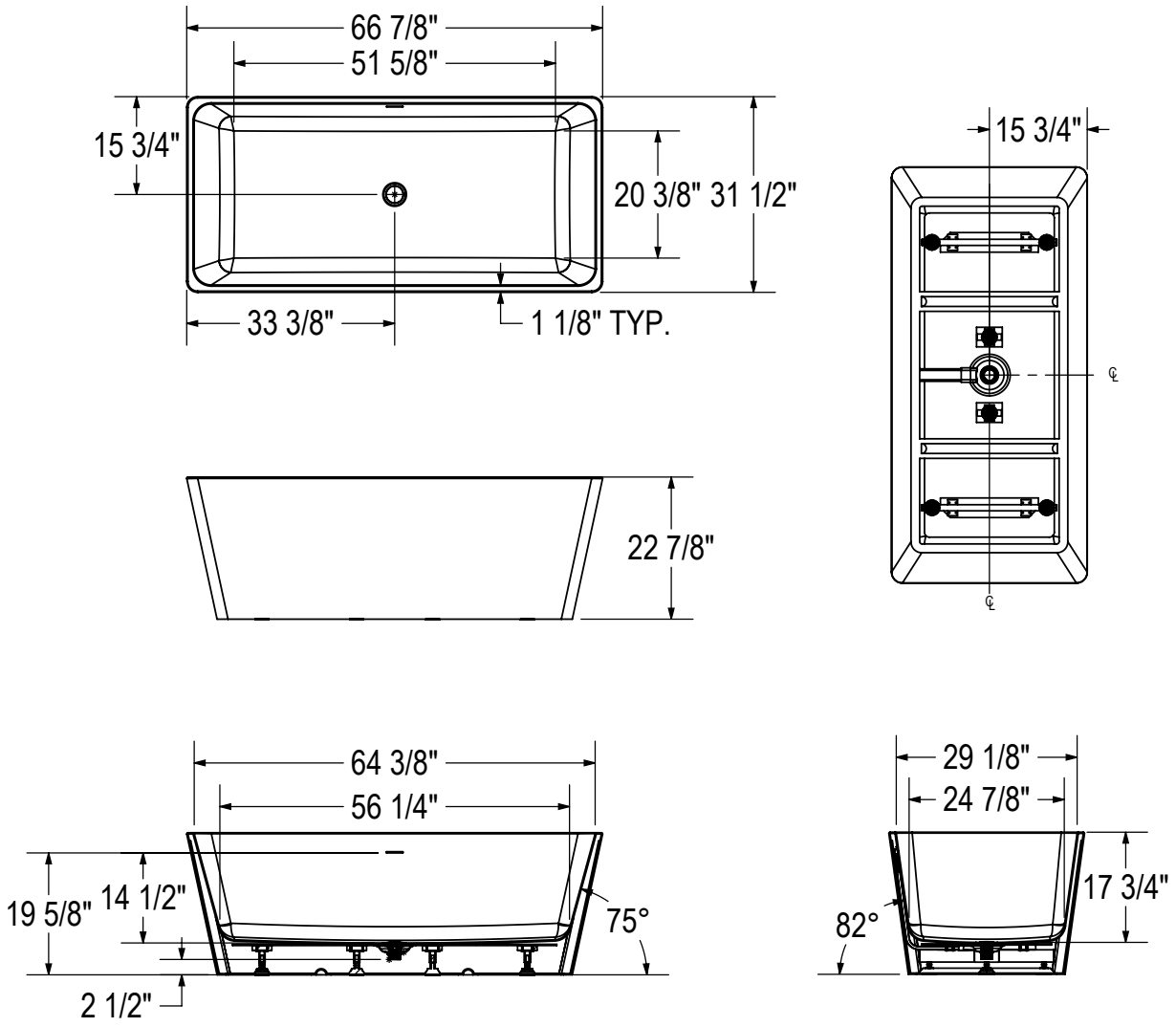

All dimensions are approximate. Structure measurements must be verified against the unit to ensure proper fit.

Sinfoni 5928

Material : Acrylic

Features

- Seamless 1-piece minimalist and versatile design to fit any bathroom style
- Trimless linear overflow and white pop-up drain to match any faucet finish
- Hygienic, non-porous acrylic surface for easy cleaning
- High gloss finish resistant to dulling, scratching, and fading
- 25-year limited warranty for your peace of mind
- 1-person bath with maximized bathing well designed for optimal comfort
- Waste and overflow included and pre-installed to save time on installation
- Comes with leveling legs for ease of installation
- Compatible with MAAX F2 Drain to save time and money on installation

SINFONI 5928 - 107681

SKU	System	Color	Configuration	Dimensions & Weight	Packaging	MSRP
107681-000-001-000	Soaker - No System	White	End Drain	58 7/8” x 28” x 26 1/4” / 85.8 lb	38.18 ft^3	$ 2739

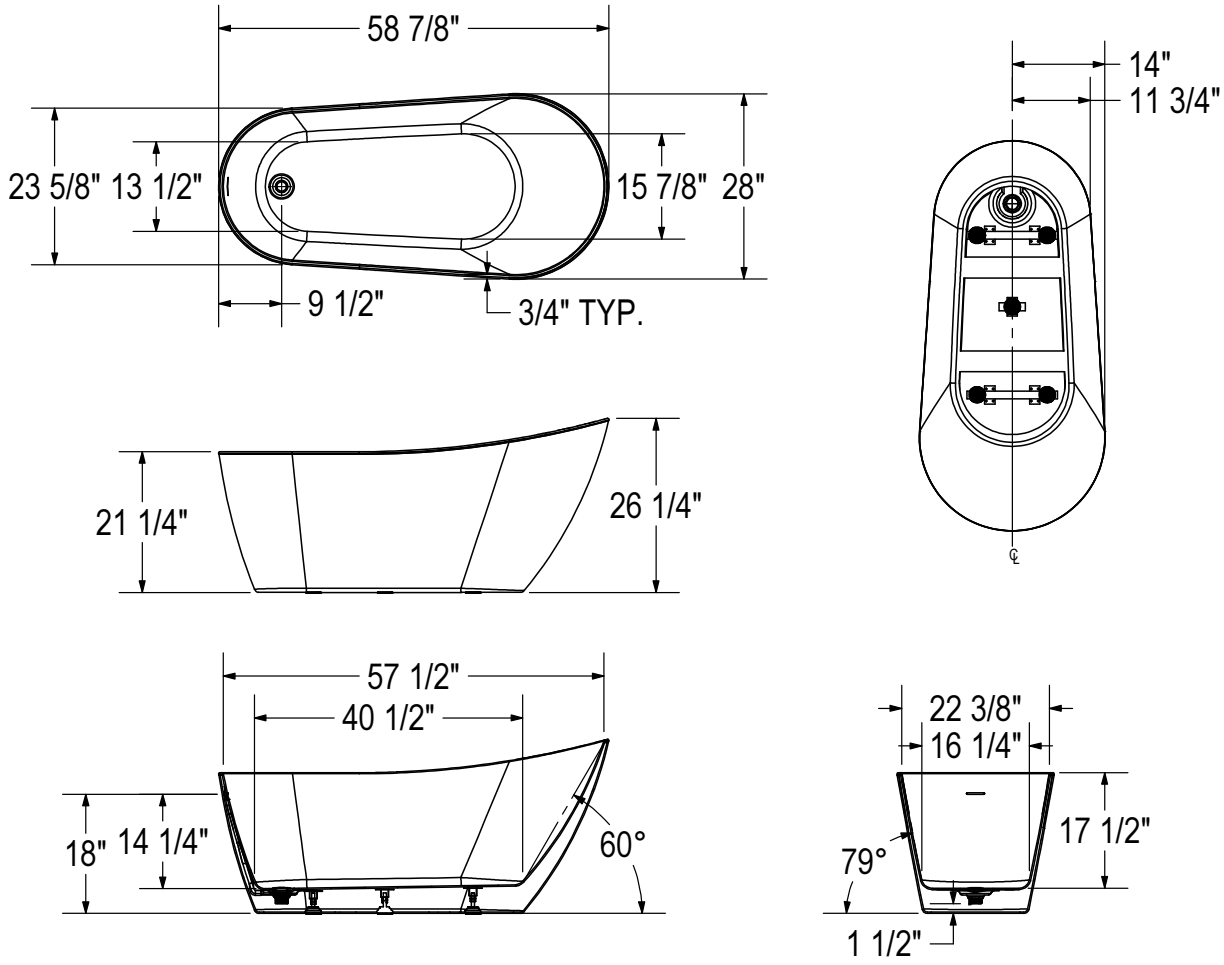

All dimensions are approximate. Structure measurements must be verified against the unit to ensure proper fit.

Sinfoni 6729

Material : Acrylic

Features

- Seamless 1-piece minimalist and versatile design to fit any bathroom style
- Trimless linear overflow and white pop-up drain to match any faucet finish
- Hygienic, non-porous acrylic surface for easy cleaning
- High gloss finish resistant to dulling, scratching, and fading
- 25-year limited warranty for your peace of mind
- 1-person bath with maximized bathing well designed for optimal comfort
- Waste and overflow included and pre-installed to save time on installation
- Comes with leveling legs for ease of installation
- Compatible with MAAX F2 Drain to save time and money on installation

SINFONI 6729 - 107680

SKU	System	Color	Configuration	Dimensions & Weight	Packaging	MSRP
107680-000-001-000	Soaker - No System	White	End Drain	67” x 28 3/4” x 26 3/8” / 140.8 lb	45.31 ft^3	$ 3301

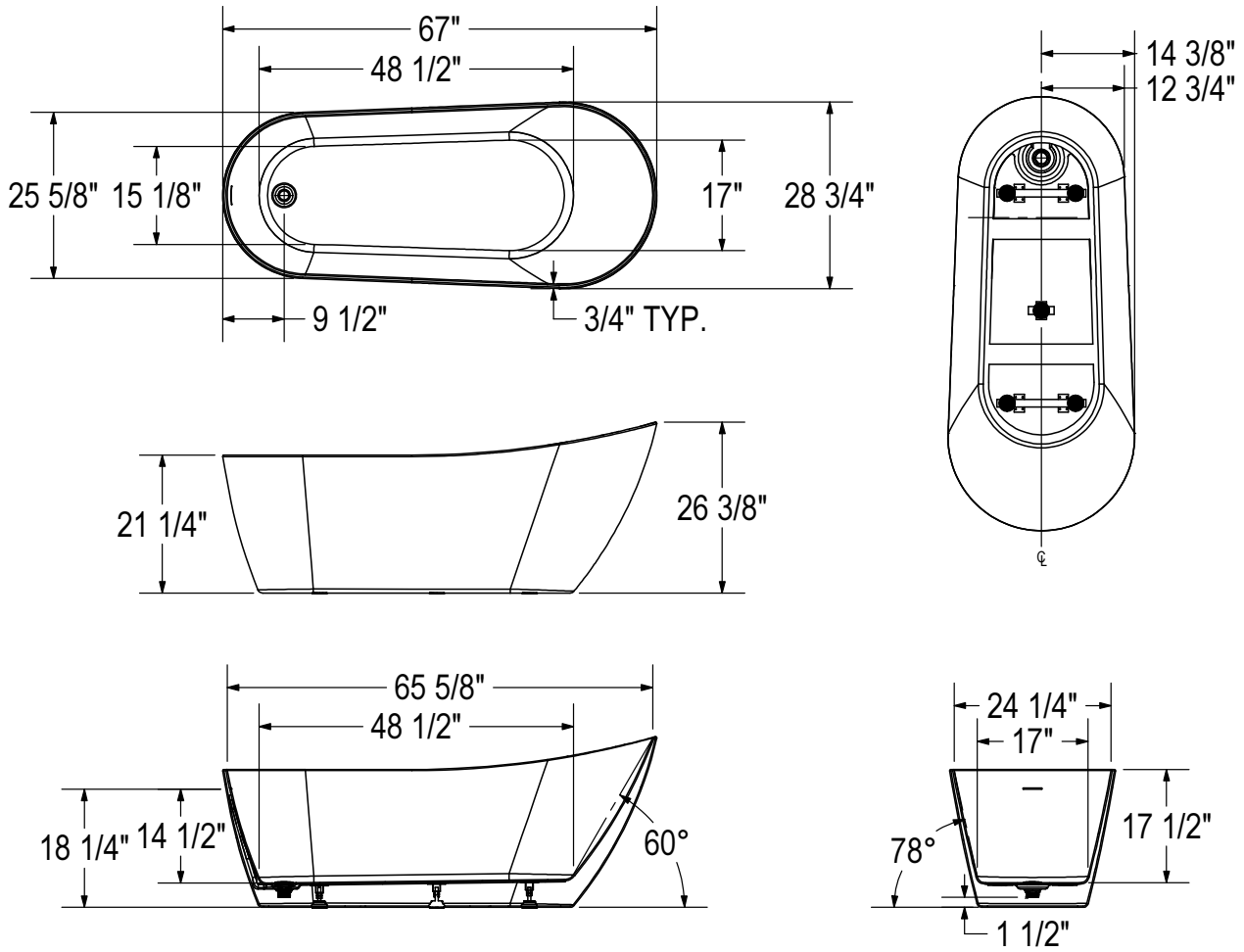

All dimensions are approximate. Structure measurements must be verified against the unit to ensure proper fit.

Lounge

Material : Acrylic

Features

- Acrylic surface resistant to stains
- Bathtub skirt available in 4 colours: White, Sterling Silver, Black, Thunder Grey
- Maximized bathing well with comfortable backrest
- 2-piece bathtub for easy transportation and seamless installation
- Compatible with F2 drain connector to save time and money on installation
- MAAX innovative leveling legs for easy installation
- High gloss finish resistant to dulling, scratching, and fading
- Minimalist and versatile design to fit any bathroom
- Product warranty: 25-year

LOUNGE 6434 - 105798

SKU	System	Color	Configuration	Dimensions & Weight	Packaging	MSRP
105798-000-001-100	Soaker - No System	White	End Drain	64” x 34” x 22 1/4” / 150 lb	36.39 ft^3	$ 2939
105798-000-001-105		Black				$ 2939
105798-000-001-106		Sterling Silver				$ 2939
105798-000-001-107		Thunder Grey				$ 2939

COMMON OPTIONS

SKU	Description	MSRP
OPT20137-004	Cable-operated waste and overflow (16 in. to 22 in.) (included in product packaging when purchased) Available colors: White **(001)**, Bone **(004)**, Chrome **(084)** and Brushed Nickel **(105)**	$ 362
OPT20137-084		$ 362
OPT20137-105		$ 362
OPT20137-001		$ 362
106021-000-002-000	Apron only (sold separately as a replacement part) Available standard apron color: White apron **(002)**	$ 1574

ACCESSORIES

SKU	Description	MSRP
10032754	F^2 Drain kit for high-rise construction for freestanding bathtub installation (sold separately) Respects National Building Code of Canada (CAN/ULC-S102.2 flame and smoke protection) for high rise construction Minimum space required for assembly is 10 3/8 inches Compatible exclusively with MAAX freestanding bathtubs.	$ 402
10032757	F^2 Drain - Pack of 12 ABS kits for freestanding bathtub installation (sold separately) Minimum space required for assembly is 10 3/8 inches Compatible exclusively with MAAX freestanding bathtubs.	$ 2710
10004306-001	White foam cushion with 2 suction pads (sold separately) Available color: White **(001)**	$ 138
10022491-004	Cable-operated waste and overflow (16 in. to 22 in.) (sold separately) Available colors: White **(001)**, Bone **(004)**, Chrome **(084)** and Brushed Nickel **(105)**	$ 362

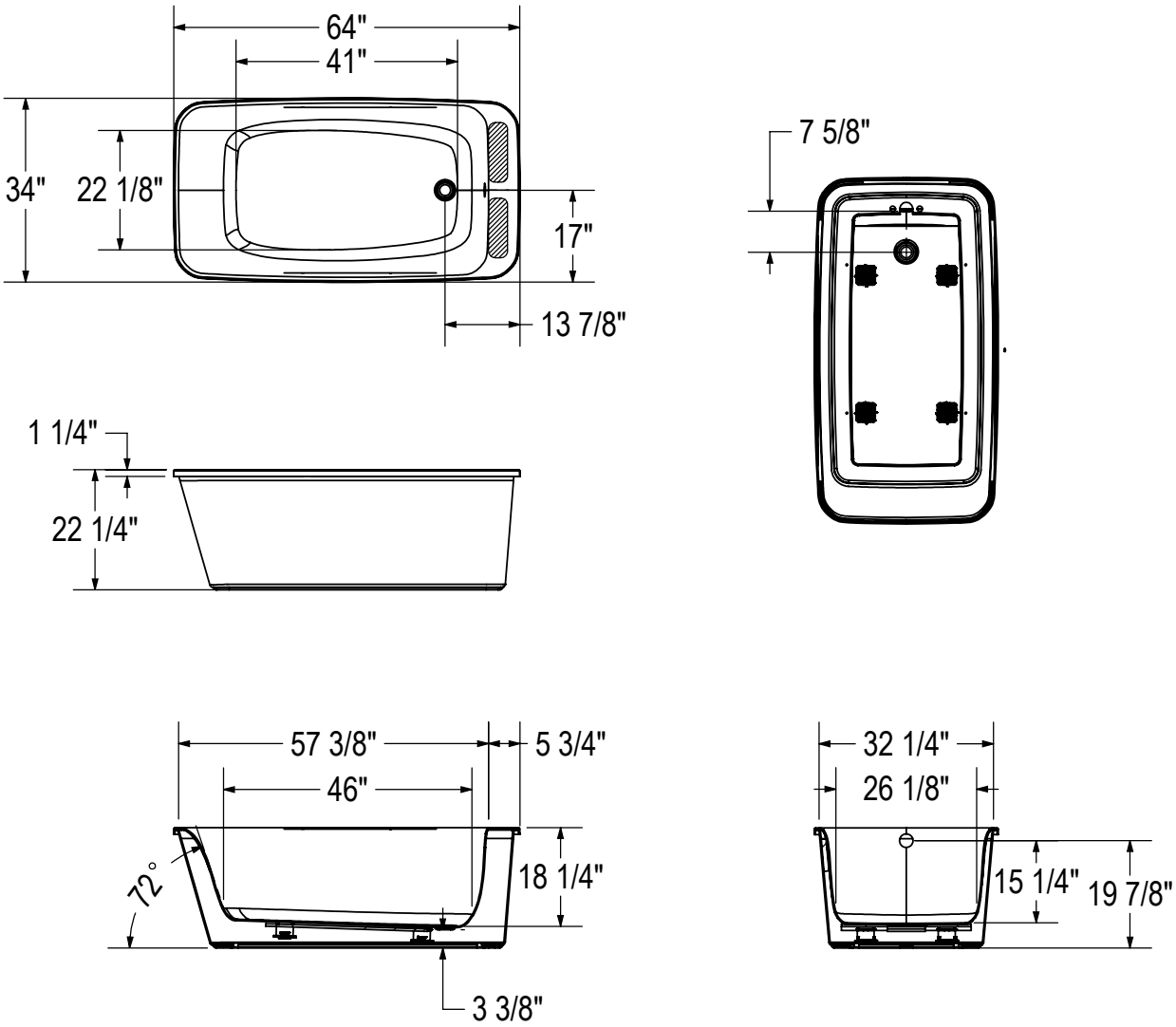

(▥) : Recommended faucet area 2 sections of 12" (L) x 3 1/2" (W).

All dimensions are approximate. Structure measurements must be verified against the unit to ensure proper fit.

Brioso 6636

Material : AcrylX

Features

- Freestanding installation
- AcrylX™ surface resistant to stains
- MAAX innovative leveling legs for easy installation
- Compatible with MAAX F2 Drain connector to save time and money on installation
- Available in an Above-the-Floor Rough (AFR) configuration for easier drain, waste and overflow installation
- 2-piece bathtub for easy transportation and seamless installation
- High gloss finish resistant to dulling, scratching, and fading
- Proudly made in North America
- Available in white, thunder gray, sterling silver or black color to complement any bathroom decor

BRIOSO 6636 - 103903

SKU	System	Color	Configuration	Dimensions & Weight	Packaging	MSRP
103903-000-002-100	Soaker - No System	White	Center Drain	66” x 36” x 23” / 106 lb	44 ft^3	$ 2592
103903-000-002-102		Black				$ 2592
103903-000-002-115		Sterling Silver				$ 2592
103903-000-002-116		Thunder Grey				$ 2592

COMMON OPTIONS

SKU	Description	MSRP
OPT20252	Linear Waste & Overflow with pack of 3 finishes (Chrome, Brushed Nickel & Dark Bronze)	$ 537
OPT20137-004	Cable-operated waste and overflow (16 in. to 22 in.) (included in product packaging when purchased) Available colors: White **(001)**, Bone **(004)**, Chrome **(084)** and Brushed Nickel **(105)**	$ 362
OPT20137-084		$ 362
OPT20137-105		$ 362
OPT20137-001		$ 362
OPT20210-084	Waste and overflow (16 in. to 22 in.) (included in product packaging when purchased) Available colors: Chrome **(084)** and Brushed Nickel **(105)**	$ 136
OPT20210-105		$ 182
OPT20250-084	Brass flexible waste and overflow for high-rise construction Available colors: Chrome **(084)** and Brushed Nickel **(105)**	$ 556
OPT20250-105		$ 647
106157-000-015-000	Apron only (sold separately as a replacement part) Available standard apron color: White apron **(002)**	$ 1721
106157-000-002-000		$ 1721

ACCESSORIES

SKU	Description	MSRP
10012135-105	Waste and overflow (16 to 22 in.) (sold separately) Available colours: Chrome **(084)** and Brushed Nickel **(105)**	$ 182
10012135-084		$ 136
10032754	F^2 Drain kit for high-rise construction for freestanding bathtub installation (sold separately) Respects National Building Code of Canada (CAN/ULC-S102.2 flame and smoke protection) for high rise construction Minimum space required for assembly is 10 3/8 inches Compatible exclusively with MAAX freestanding bathtubs.	$ 402
10032757	F^2 Drain - Pack of 12 ABS kits for freestanding bathtub installation (sold separately) Minimum space required for assembly is 10 3/8 inches Compatible exclusively with MAAX freestanding bathtubs.	$ 2710
10004306-001	White foam cushion with 2 suction pads (sold separately) Available color: White **(001)**	$ 138

ACCESSORIES

SKU	Description	MSRP
10032808-084	Brass flexible waste and overflow for high construction (sold separately) Available colors: Chrome **(084)** and Brushed Nickel **(105)**	$ 556
10032808-105		$ 647
10022491-004	Cable-operated waste and overflow (16 in. to 22 in.) (sold separately) Available colors: White **(001)**, Bone **(004)**, Chrome **(084)** and Brushed Nickel **(105)**	$ 362

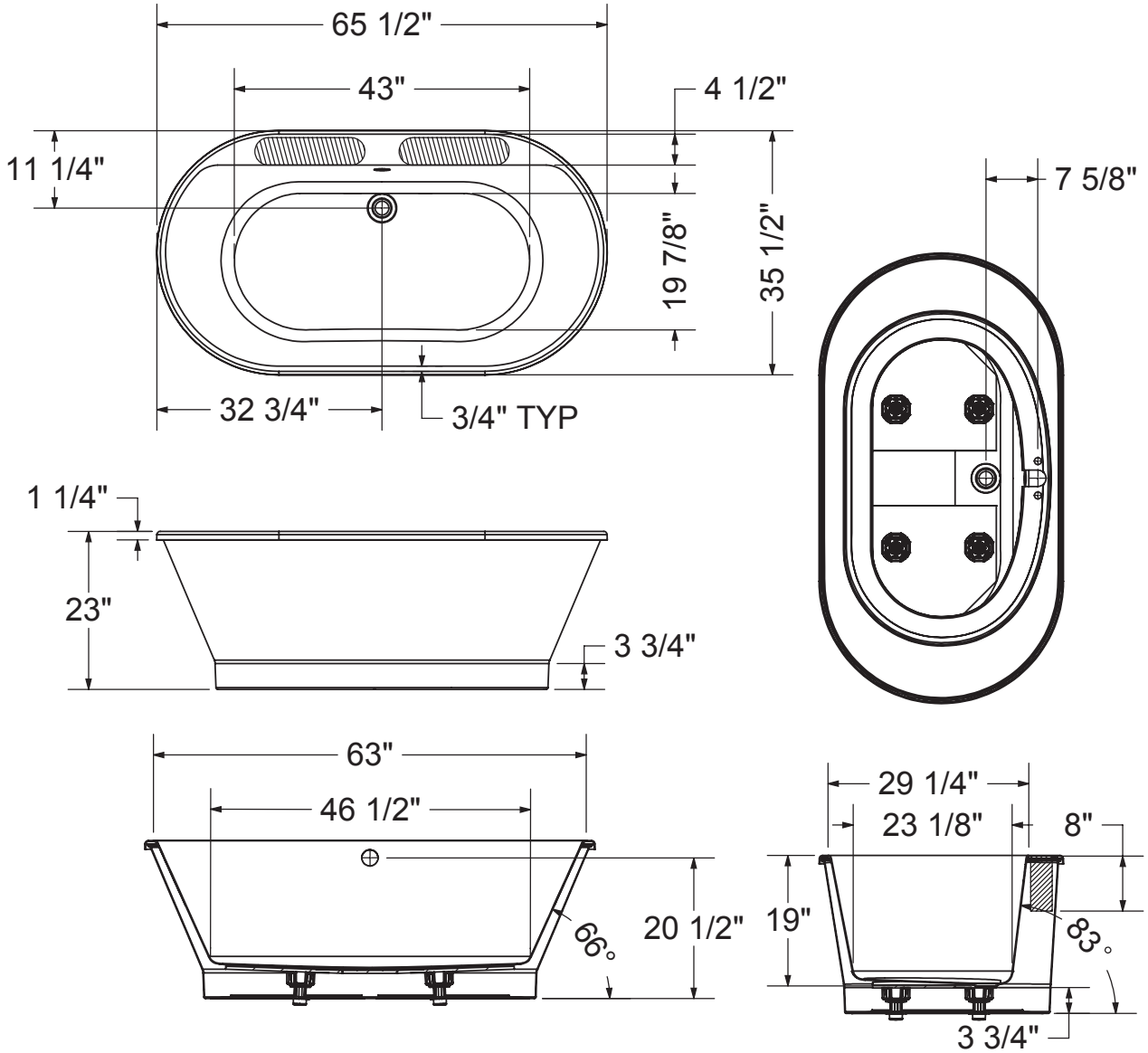

(▥) :Recommended faucet area 2 sections of 16" (L) x 4" (W).
Depth recommended for straight pipes 8".

All dimensions are approximate. Structure measurements must be verified against the unit to ensure proper fit.

Go to Table of Contents

Eldora 5832

Material : AcrylX

Features

- Linear waste and overflow included and factory installed
- Faucet installation can be deck-mounted or floor-mounted
- Maximized bathing well with comfortable backrest
- Perfect for small footprint bathroom
- Above-the-Floor Rough (AFR) and F2 Drain compatible
- MAAX innovative leveling legs for easy installation

ELDORA 5832 - 106992

SKU	System	Color	Configuration	Dimensions & Weight	Packaging	MSRP
106992-000-002-100	Soaker - No System	White	Center Drain	58” x 32” x 23” / 110 lb	0 ft^3	$ 2760

COMMON OPTIONS

SKU	Description	MSRP
106844-000-002-000	Skirt for Emica 5832 and Eldora 5832 (sold separately as a replacement part)	$ 1424

ACCESSORIES

SKU	Description	MSRP
10032754	F^2 Drain kit for high-rise construction for freestanding bathtub installation (sold separately) Respects National Building Code of Canada (CAN/ULC-S102.2 flame and smoke protection) for high rise construction Minimum space required for assembly is 10 3/8 inches Compatible exclusively with MAAX freestanding bathtubs.	$ 402
10032757	F^2 Drain - Pack of 12 ABS kits for freestanding bathtub installation (sold separately) Minimum space required for assembly is 10 3/8 inches Compatible exclusively with MAAX freestanding bathtubs.	$ 2710
10004306-001	White foam cushion with 2 suction pads (sold separately) Available color: White **(001)**	$ 138

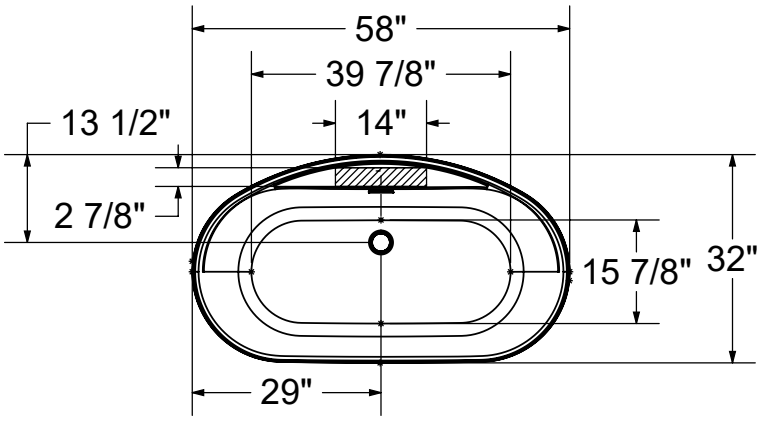

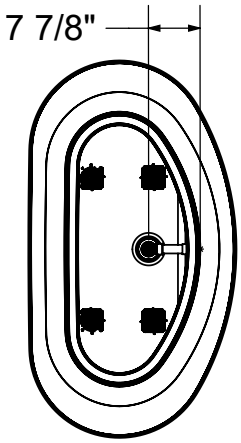

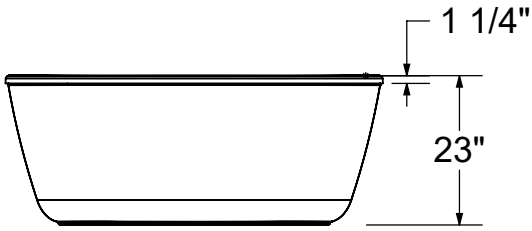

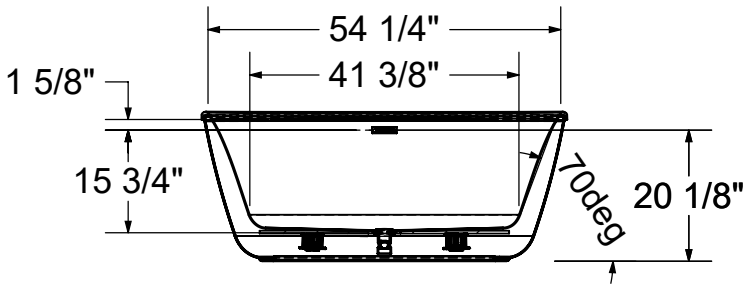

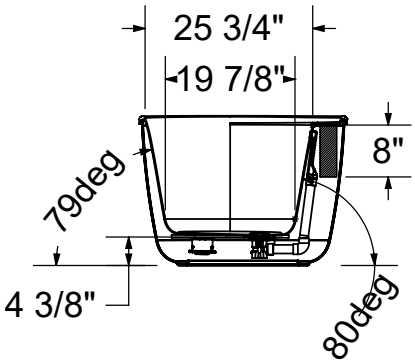

(▥) Recommended faucet area 1 section of 14" (L) x 2 7/8" (W).
Depth recommended for straight pipes 8".

All dimensions are approximate. Structure measurements must be verified against the unit to ensure proper fit.

Go to Table of Contents

Eldora 6434

Material : AcrylX

Features

- 2-piece bathtub - transports and installs easily
- Linear waste and overflow included and factory installed
- Faucet installation can be deck-mounted or floor-mounted
- Maximized bathing well with comfortable backrest
- Perfect for small footprint bathroom
- Above-the-Floor Rough (AFR) and F2 Drain compatible
- MAAX innovative leveling legs for easy installation

ELDORA 6434 - 106993

SKU	System	Color	Configuration	Dimensions & Weight	Packaging	MSRP
106993-000-002-100	Soaker - No System	White	Center Drain	64” x 34” x 23” / 130 lb	38 ft^3	$ 3159

COMMON OPTIONS

SKU	Description	MSRP
106845-000-002-000	Skirt for Emica 6434 and Eldora 6434 (sold separately as a replacement part)	$ 1686

ACCESSORIES

SKU	Description	MSRP
10032754	F^2 Drain kit for high-rise construction for freestanding bathtub installation (sold separately) Respects National Building Code of Canada (CAN/ULC-S102.2 flame and smoke protection) for high rise construction Minimum space required for assembly is 10 3/8 inches Compatible exclusively with MAAX freestanding bathtubs.	$ 402
10032757	F^2 Drain - Pack of 12 ABS kits for freestanding bathtub installation (sold separately) Minimum space required for assembly is 10 3/8 inches Compatible exclusively with MAAX freestanding bathtubs.	$ 2710
10004306-001	White foam cushion with 2 suction pads (sold separately) Available color: White **(001)**	$ 138

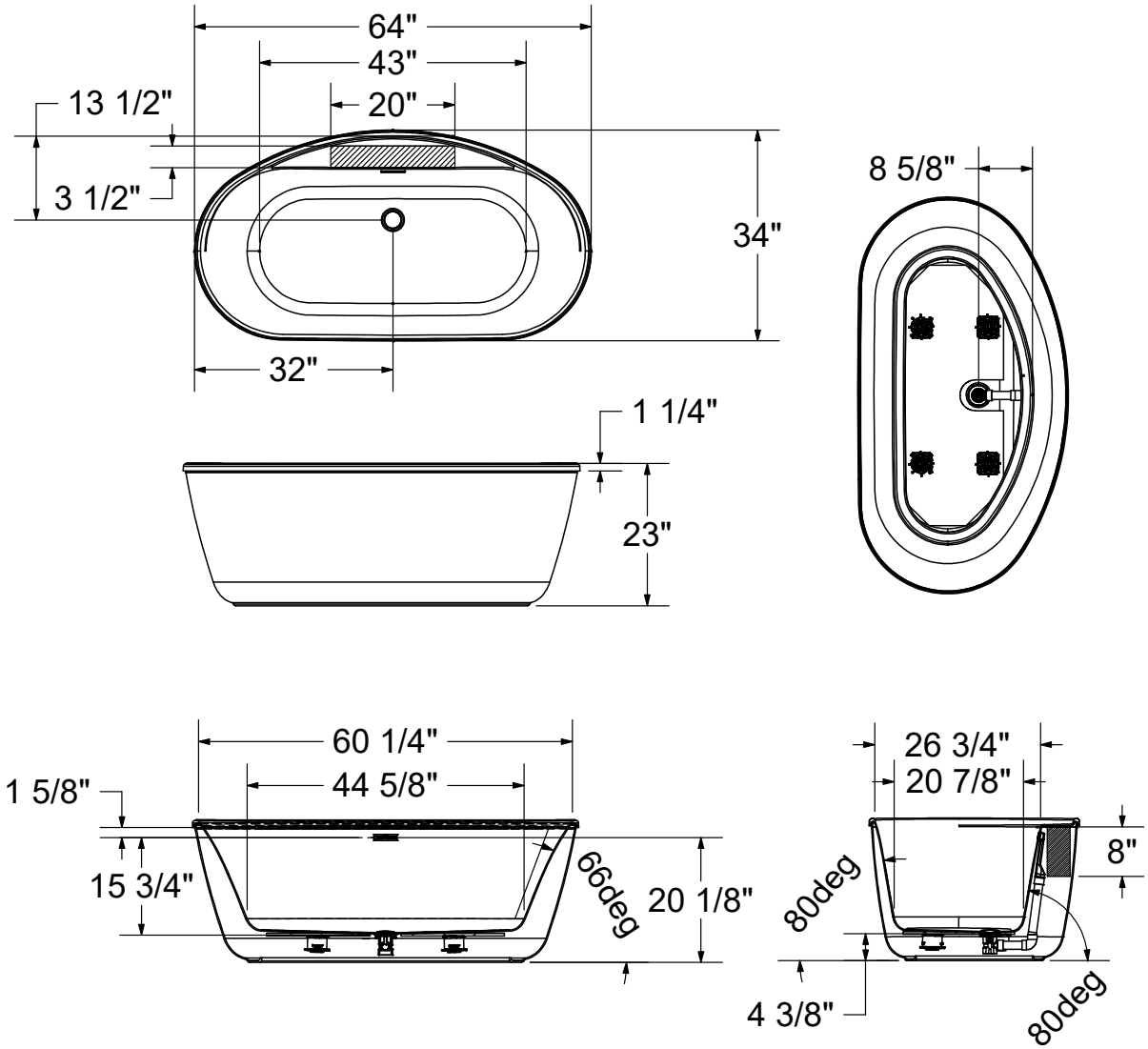

( ) Recommended faucet area 1 section of 20" (L) x 3 1/2" (W).
Depth recommended for straight pipes 8".

All dimensions are approximate. Structure measurements must be verified against the unit to ensure proper fit.

Finlay

Material : AcrylX

Features

- 2-piece AcrylX™ bathtub - transports and installs easily
- Linear waste and overflow included and factory installed
- White overflow trim and pop-up drain
- Faucet installation can be deck-mounted or floor-mounted
- Above-the-Floor Rough (AFR) and F2 Drain compatible
- Maximized bathing well with comfortable backrest
- Maax innovative leveling legs for easy installation
- Perfect for small footprint bathroom

FINLAY - 106997

SKU	System	Color	Configuration	Dimensions & Weight	Packaging	MSRP
106997-000-002-100	Soaker - No System	White	End Drain	58” x 32” x 27 3/4” / -10 lb	0 ft^3	$ 2186

ACCESSORIES

SKU	Description	MSRP
10032754	F^2 Drain kit for high-rise construction for freestanding bathtub installation (sold separately) Respects National Building Code of Canada (CAN/ULC-S102.2 flame and smoke protection) for high rise construction Minimum space required for assembly is 10 3/8 inches Compatible exclusively with MAAX freestanding bathtubs.	$ 402
10032757	F^2 Drain - Pack of 12 ABS kits for freestanding bathtub installation (sold separately) Minimum space required for assembly is 10 3/8 inches Compatible exclusively with MAAX freestanding bathtubs.	$ 2710
10004306-001	White foam cushion with 2 suction pads (sold separately) Available color: White **(001)**	$ 138

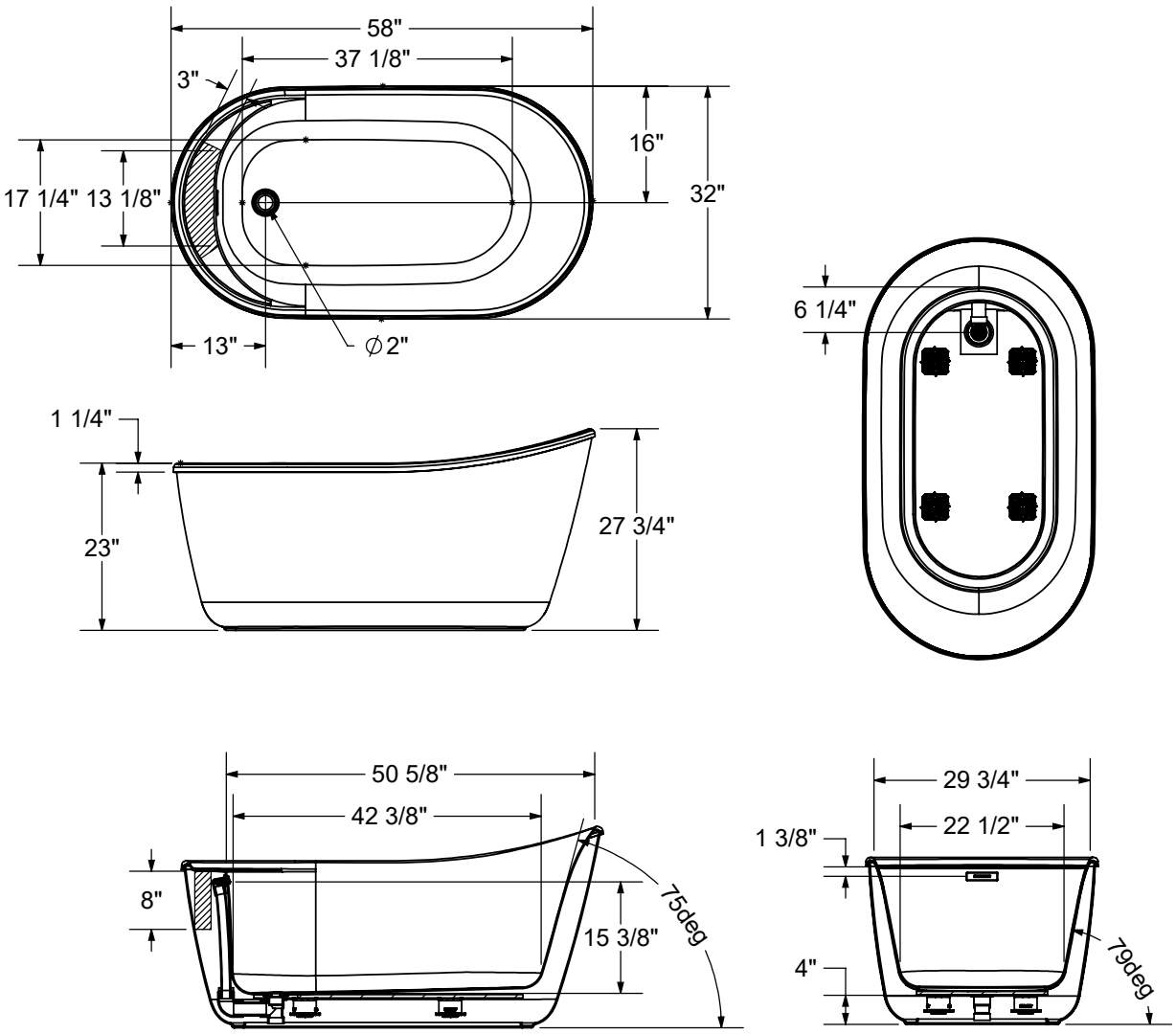

- All dimensions are approximate
- Structure measurements must be verified against the unit to ensure proper fit
- Installation to be completed in accordance with manufacturers specifications
- Do not scale drawings

Recommended faucet area of 13 1/8" (L) x 3" (W). Depth recommended for straight pipes 8".

Go to Table of Contents

Fontana

Material : AcrylX

Features

- Linear waste and overflow included and factory installed
- Faucet installation can be deck-mounted or floor-mounted
- Maximized bathing well with comfortable backrest
- Perfect for small footprint bathroom
- Above-the-Floor Rough (AFR) and F2 Drain compatible
- MAAX innovative leveling legs for easy installation

FONTANA - 106994

SKU	System	Color	Configuration	Dimensions & Weight	Packaging	MSRP
106994-000-002-000	Soaker - No System	White	Center Drain	58” x 32” x 23” / 120 lb	33 ft^3	$ 2869

COMMON OPTIONS

SKU	Description	MSRP
106846-000-002-000	Skirt for Odetta and Fontana (sold separately as a replacement part)	$ 1424

ACCESSORIES

SKU	Description	MSRP
10032754	F^2 Drain kit for high-rise construction for freestanding bathtub installation (sold separately) Respects National Building Code of Canada (CAN/ULC-S102.2 flame and smoke protection) for high rise construction Minimum space required for assembly is 10 3/8 inches Compatible exclusively with MAAX freestanding bathtubs.	$ 402
10032757	F^2 Drain - Pack of 12 ABS kits for freestanding bathtub installation (sold separately) Minimum space required for assembly is 10 3/8 inches Compatible exclusively with MAAX freestanding bathtubs.	$ 2710
10004306-001	White foam cushion with 2 suction pads (sold separately) Available color: White **(001)**	$ 138

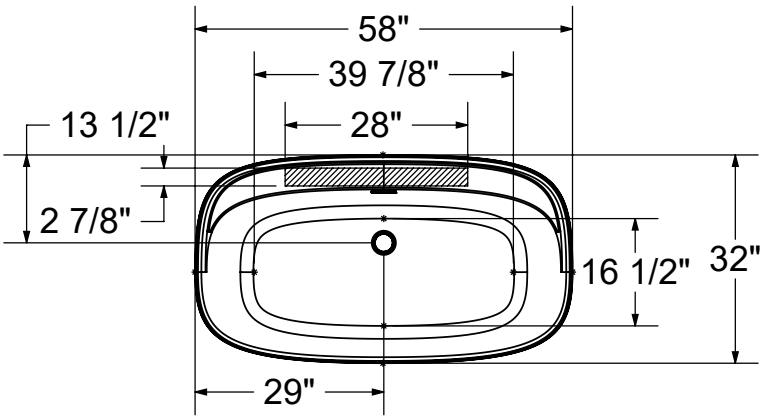

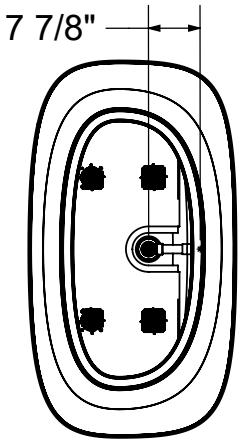

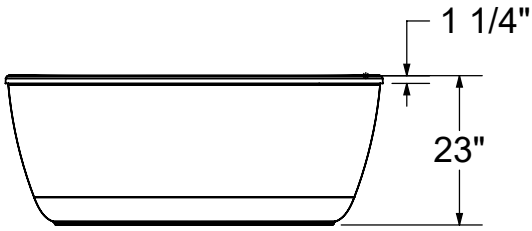

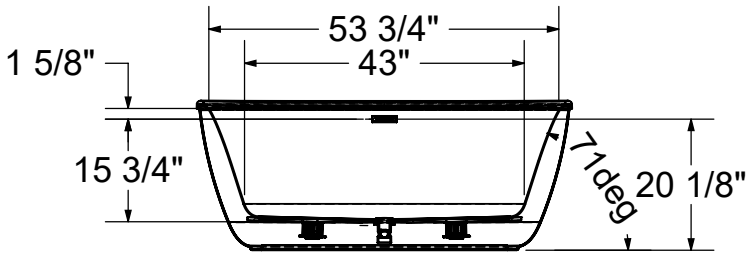

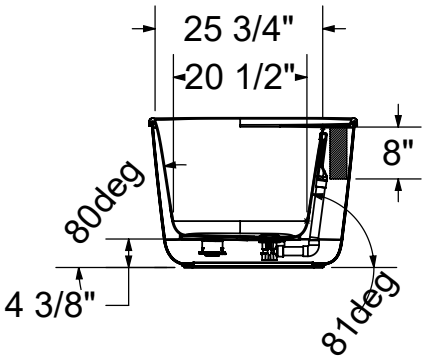

(▥) Recommended faucet area 1 section of 28" (L) x 2 7/8" (W).
Depth recommended for straight pipes 8".

All dimensions are approximate. Structure measurements must be verified against the unit to ensure proper fit.

Golan 5829

Material : AcrylX

Features

- 2-piece bathtub for an easy installation
- High gloss finish resistant to dulling, scratching, and fading
- AcrylX surface resistant to stains
- Maximized bathing designed for optimal comfort
- Linear waste and overflow included and factory installed
- Comes with leveling legs for ease of installation
- Compatible with MAAX F2 Drain connector to save time and money on installation
- Freestanding bathtub
- Proudly made in North America

GOLAN 5829 - 107519

SKU	System	Color	Configuration	Dimensions & Weight	Packaging	MSRP
107519-000-002-000	Soaker - No System	White	Center Drain	58” x 29” x 23” / 105 lb	33 ft^3	$ 2760

ACCESSORIES

SKU	Description	MSRP
10032754	F^2 Drain kit for high-rise construction for freestanding bathtub installation (sold separately) Respects National Building Code of Canada (CAN/ULC-S102.2 flame and smoke protection) for high rise construction Minimum space required for assembly is 10 3/8 inches Compatible exclusively with MAAX freestanding bathtubs.	$ 402
10032757	F^2 Drain - Pack of 12 ABS kits for freestanding bathtub installation (sold separately) Minimum space required for assembly is 10 3/8 inches Compatible exclusively with MAAX freestanding bathtubs.	$ 2710
10004306-001	White foam cushion with 2 suction pads (sold separately) Available color: White **(001)**	$ 138

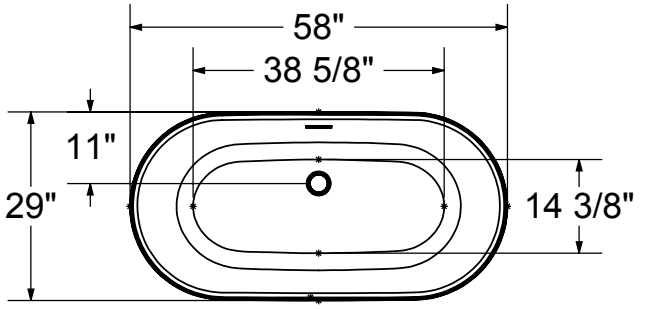

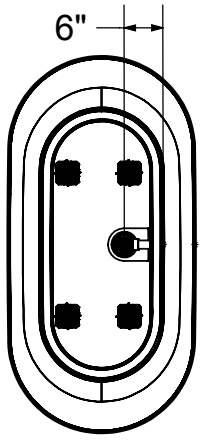

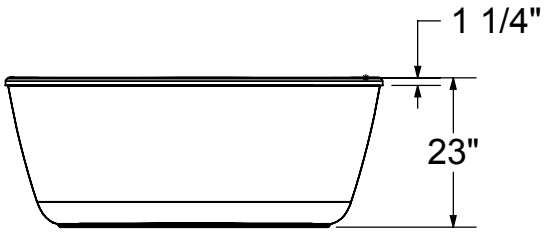

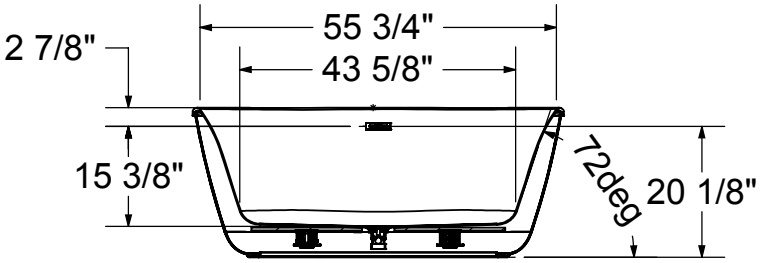

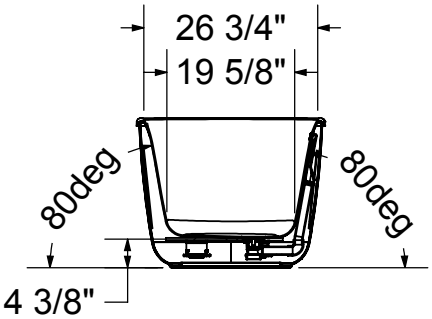

All dimensions are approximate. Structure measurements must be verified against the unit to ensure proper fit.

Golan 6429

Material : AcrylX

Features

- 2-piece bathtub - transports and installs easily
- Linear waste and overflow included and factory installed
- Above-the-Floor Rough (AFR) and F2 Drain compatible
- MAAX innovative leveling legs for easy installation
- Maximized bathing well with comfortable backrest
- Minimalist design
- Perfect for small footprint bathrooms

GOLAN 6429 - 107520

SKU	System	Color	Configuration	Dimensions & Weight	Packaging	MSRP
107520-000-002-000	Soaker - No System	White	Center Drain	64” x 29” x 23” / 115 lb	38 ft^3	$ 3159

ACCESSORIES

SKU	Description	MSRP
10032754	F^2 Drain kit for high-rise construction for freestanding bathtub installation (sold separately) Respects National Building Code of Canada (CAN/ULC-S102.2 flame and smoke protection) for high rise construction Minimum space required for assembly is 10 3/8 inches Compatible exclusively with MAAX freestanding bathtubs.	$ 402
10032757	F^2 Drain - Pack of 12 ABS kits for freestanding bathtub installation (sold separately) Minimum space required for assembly is 10 3/8 inches Compatible exclusively with MAAX freestanding bathtubs.	$ 2710
10004306-001	White foam cushion with 2 suction pads (sold separately) Available color: White **(001)**	$ 138

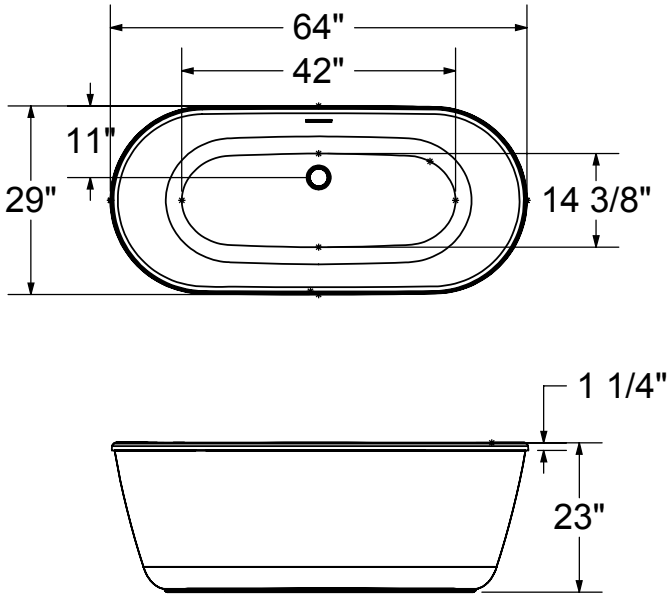

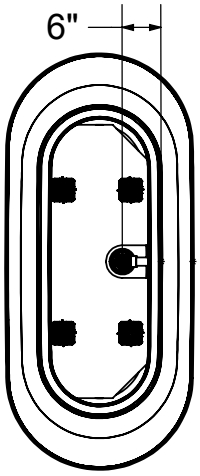

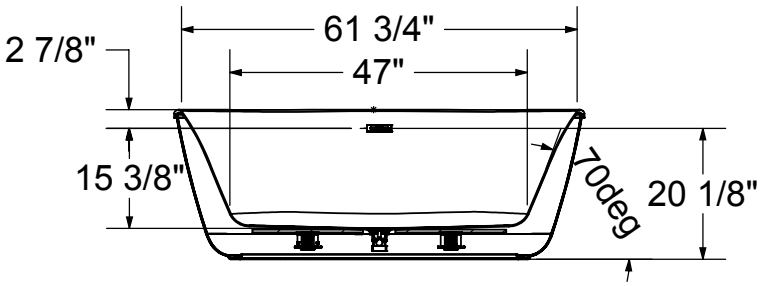

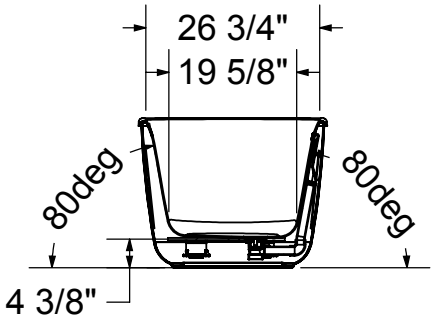

All dimensions are approximate. Structure measurements must be verified against the unit to ensure proper fit.

Pocono

Material : AcrylX

Features

- 2-piece bathtub - transports and installs easily
- Linear waste and overflow included and factory installed
- Faucet installation can be deck-mounted or floor-mounted
- Maximized bathing well with comfortable backrest
- Perfect for small footprint bathroom
- Above-the-Floor Rough (AFR) and F2 Drain compatible
- MAAX innovative leveling legs for easy installation

POCONO - 106995

SKU	System	Color	Configuration	Dimensions & Weight	Packaging	MSRP
106995-000-002-000	Soaker - No System	White	Center Drain	58” x 32” x 23” / 120 lb	33 ft^3	$ 2869

ACCESSORIES

SKU	Description	MSRP
10032754	F^2 Drain kit for high-rise construction for freestanding bathtub installation (sold separately) Respects National Building Code of Canada (CAN/ULC-S102.2 flame and smoke protection) for high rise construction Minimum space required for assembly is 10 3/8 inches Compatible exclusively with MAAX freestanding bathtubs.	$ 402
10032757	F^2 Drain - Pack of 12 ABS kits for freestanding bathtub installation (sold separately) Minimum space required for assembly is 10 3/8 inches Compatible exclusively with MAAX freestanding bathtubs.	$ 2710
10004306-001	White foam cushion with 2 suction pads (sold separately) Available color: White **(001)**	$ 138

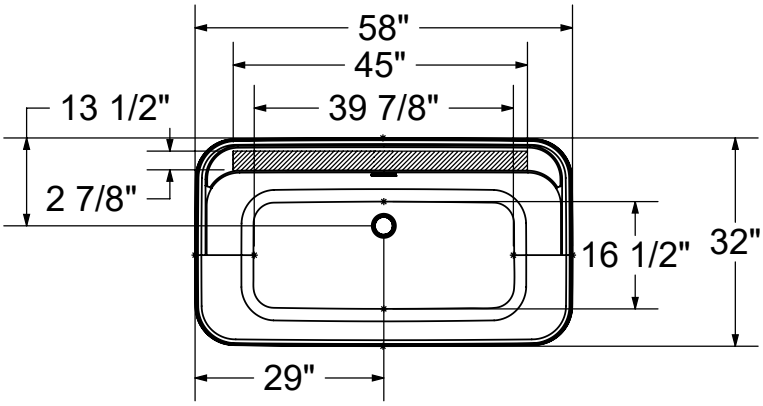

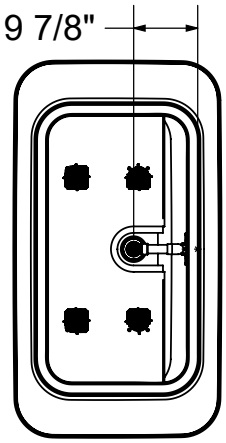

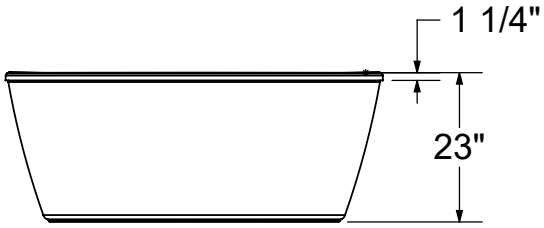

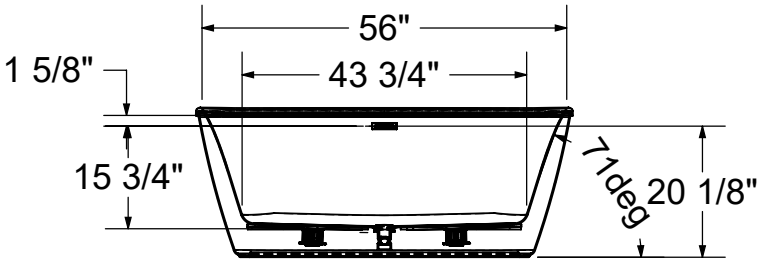

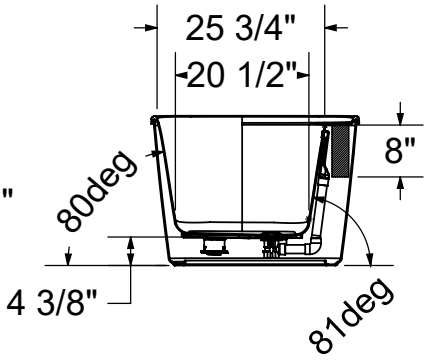

(▥) Recommended faucet area 1 section of 45" (L) x 2 7/8" (W).
Depth recommended for straight pipes 8".

All dimensions are approximate. Structure measurements must be verified against the unit to ensure proper fit.

Sonoma

Material : AcrylX

Features

- Freestanding bathtub
- AcrylX™ surface resistant to stains
- Linear waste and overflow included and factory installed
- 2-piece bathtub for easy transportation and seamless installation
- Compatible with F2 drain connector to save time and money on installation
- MAAX innovative leveling legs for easy installation
- High gloss finish resistant to dulling, scratching, and fading
- Minimalist and versatile design to fit any bathroom style
- Proudly made in North America

SONOMA - 106996

SKU	System	Color	Configuration	Dimensions & Weight	Packaging	MSRP
106996-000-002-000	Soaker - No System	White	Center Drain	58” x 32” x 27” / 120 lb	33 ft^3	$ 2869

ACCESSORIES

SKU	Description	MSRP
10032754	F^2 Drain kit for high-rise construction for freestanding bathtub installation (sold separately) Respects National Building Code of Canada (CAN/ULC-S102.2 flame and smoke protection) for high rise construction Minimum space required for assembly is 10 3/8 inches Compatible exclusively with MAAX freestanding bathtubs.	$ 402
10032757	F^2 Drain - Pack of 12 ABS kits for freestanding bathtub installation (sold separately) Minimum space required for assembly is 10 3/8 inches Compatible exclusively with MAAX freestanding bathtubs.	$ 2710
10004306-001	White foam cushion with 2 suction pads (sold separately) Available color: White **(001)**	$ 138

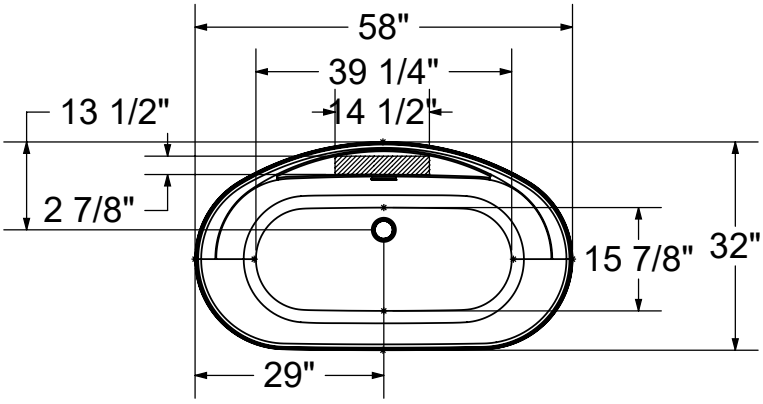

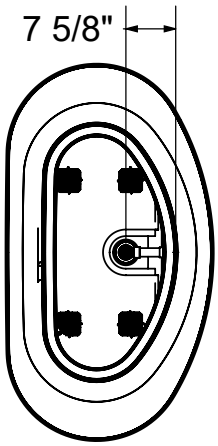

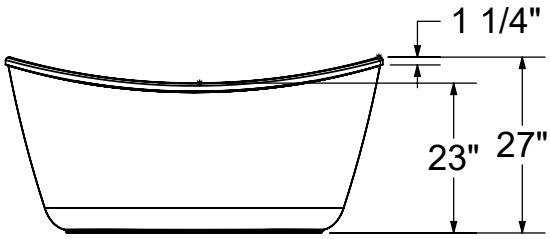

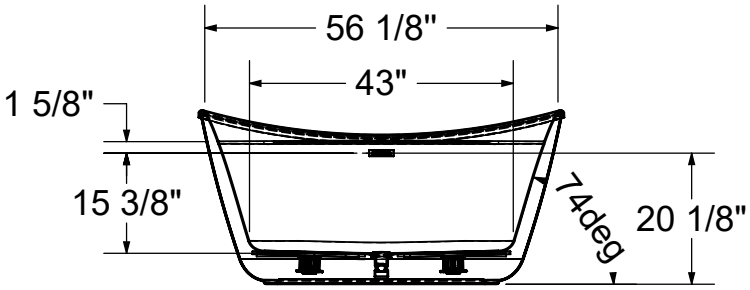

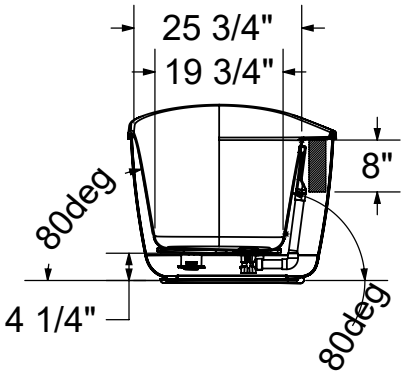

(▥) Recommended faucet area 1 section of 14 1/2" (L) x 2 7/8" (W).
Depth recommended for straight pipes 8".

All dimensions are approximate. Structure measurements must be verified against the unit to ensure proper fit.

Delsia 6032

Material : AcrylX

Features

- AcrylX™ surface resistant to stains
- Bathtub skirt available in 4 colours: White, Sterling Silver, Black, Thunder Grey
- 2-piece bathtub for easy transportation and seamless installation
- Compatible with F2 drain connector to save time and money on installation
- Maximized bathing well and raised backrest
- MAAX innovative leveling legs for easy installation
- High gloss finish resistant to dulling, scratching, and fading
- Classy transitional design to fit any bathroom
- Product Warranty: limited lifetime

DELSIA 6032 - 106192

SKU	System	Color	Configuration	Dimensions & Weight	Packaging	MSRP
106192-000-002-104	Soaker - No System	White	Center Drain	60” x 32” x 26 5/8” / 105 lb	32.62 ft^3	$ 2428
106192-000-002-124		Black				$ 2428
106192-000-002-125		Sterling Silver				$ 2428
106192-000-002-126		Thunder Grey				$ 2428

COMMON OPTIONS

SKU	Description	MSRP
OPT20137-004	Cable-operated waste and overflow (16 in. to 22 in.) (included in product packaging when purchased) Available colors: White **(001)**, Bone **(004)**, Chrome **(084)** and Brushed Nickel **(105)**	$ 362
OPT20137-084		$ 362
OPT20137-105		$ 362
OPT20137-001		$ 362
OPT20210-084	Waste and overflow (16 in. to 22 in.) (included in product packaging when purchased) Available colors: Chrome **(084)** and Brushed Nickel **(105)**	$ 136
OPT20210-105		$ 182
106194-000-002-000	Apron only (sold separately as a replacement part) Available standard apron color: White apron **(002)**	$ 1424

ACCESSORIES

SKU	Description	MSRP
10012135-105	Waste and overflow (16 to 22 in.) (sold separately) Available colours: Chrome **(084)** and Brushed Nickel **(105)**	$ 182
10012135-084		$ 136
10032754	F^2 Drain kit for high-rise construction for freestanding bathtub installation (sold separately) Respects National Building Code of Canada (CAN/ULC-S102.2 flame and smoke protection) for high rise construction Minimum space required for assembly is 10 3/8 inches Compatible exclusively with MAAX freestanding bathtubs.	$ 402
10032757	F^2 Drain - Pack of 12 ABS kits for freestanding bathtub installation (sold separately) Minimum space required for assembly is 10 3/8 inches Compatible exclusively with MAAX freestanding bathtubs.	$ 2710
10004306-001	White foam cushion with 2 suction pads (sold separately) Available color: White **(001)**	$ 138
10022491-004	Cable-operated waste and overflow (16 in. to 22 in.) (sold separately) Available colors: White **(001)**, Bone **(004)**, Chrome **(084)** and Brushed Nickel **(105)**	$ 362

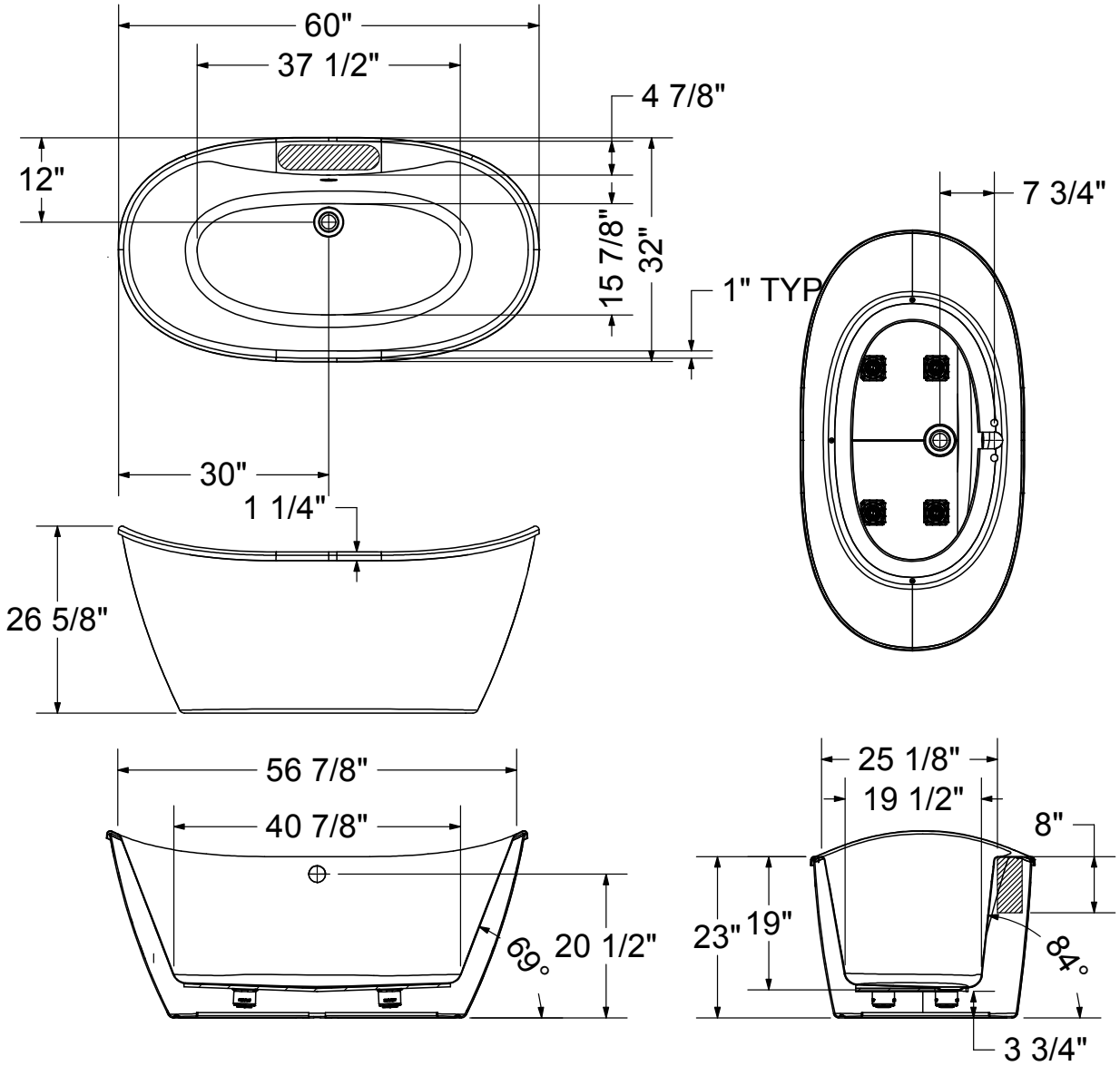

(▥) : Recommended faucet area of 15" (L) x 3-1/2" (W).
Depth recommended for straight pipes 8".

All dimensions are approximate. Structure measurements must be verified against the unit to ensure proper fit.

Delsia 6636

Material : AcrylX

Features

- AcrylX™ surface resistant to stains
- Available in timeless white colour
- Maximized bathing well
- 2-piece bathtub for easy transportation and seamless installation
- Compatible with F2 drain connector to save time and money on installation
- MAAX innovative leveling legs for easy installation
- High gloss finish resistant to dulling, scratching, and fading
- Minimalist and versatile design to fit any bathroom
- Product Warranty: limited lifetime

DELSIA 6636 - 106193

SKU	System	Color	Configuration	Dimensions & Weight	Packaging	MSRP
106193-000-002-104	Soaker - No System	White	Center Drain	66” x 36” x 26 5/8” / 110 lb	38.85 ft^3	$ 2909
106193-000-002-124		Black				$ 2909
106193-000-002-125		Sterling Silver				$ 2909
106193-000-002-126		Thunder Grey				$ 2909

COMMON OPTIONS

SKU	Description	MSRP
OPT20137-004	Cable-operated waste and overflow (16 in. to 22 in.) (included in product packaging when purchased) Available colors: White **(001)**, Bone **(004)**, Chrome **(084)** and Brushed Nickel **(105)**	$ 362
OPT20137-084		$ 362
OPT20137-105		$ 362
OPT20137-001		$ 362
OPT20210-084	Waste and overflow (16 in. to 22 in.) (included in product packaging when purchased) Available colors: Chrome **(084)** and Brushed Nickel **(105)**	$ 136
OPT20210-105		$ 182
106195-000-002-000	Apron only (sold separately as a replacement part) Available standard apron color: White apron **(002)**	$ 1686

ACCESSORIES

SKU	Description	MSRP
10012135-105	Waste and overflow (16 to 22 in.) (sold separately) Available colours: Chrome **(084)** and Brushed Nickel **(105)**	$ 182
10012135-084		$ 136
10032754	F^2 Drain kit for high-rise construction for freestanding bathtub installation (sold separately) Respects National Building Code of Canada (CAN/ULC-S102.2 flame and smoke protection) for high rise construction Minimum space required for assembly is 10 3/8 inches Compatible exclusively with MAAX freestanding bathtubs.	$ 402
10032757	F^2 Drain - Pack of 12 ABS kits for freestanding bathtub installation (sold separately) Minimum space required for assembly is 10 3/8 inches Compatible exclusively with MAAX freestanding bathtubs.	$ 2710
10004306-001	White foam cushion with 2 suction pads (sold separately) Available color: White **(001)**	$ 138
10022491-004	Cable-operated waste and overflow (16 in. to 22 in.) (sold separately) Available colors: White **(001)**, Bone **(004)**, Chrome **(084)** and Brushed Nickel **(105)**	$ 362

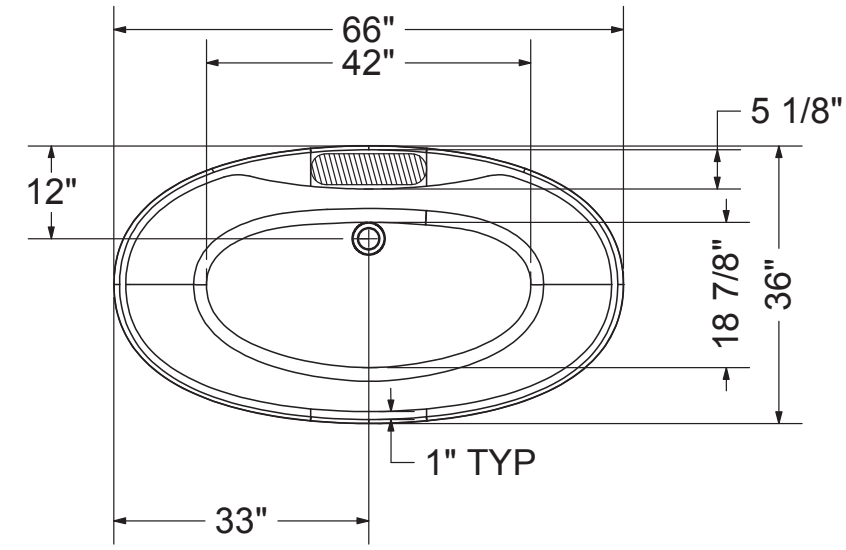

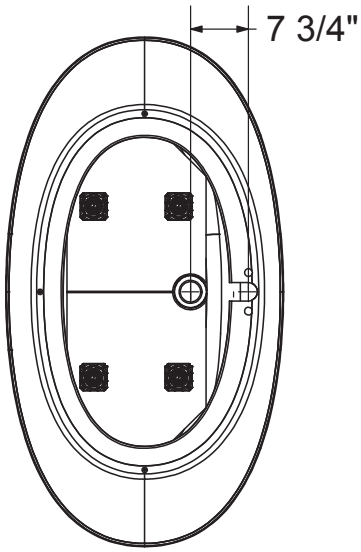

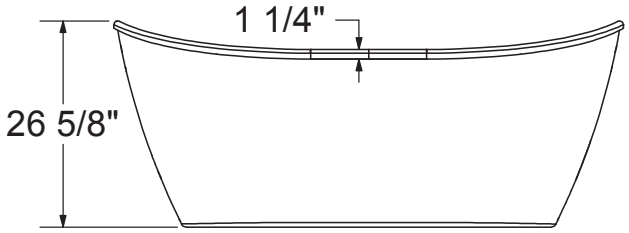

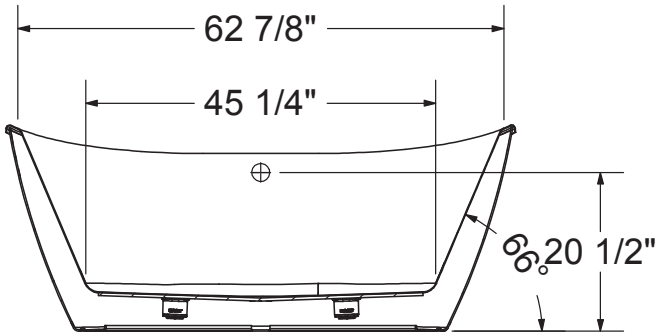

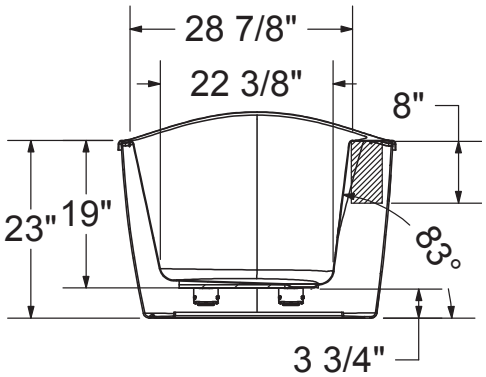

( ) : Recommended faucet area of 15" (L) x 4" (W).
Depth recommended for straight pipes 8".

All dimensions are approximate. Structure measurements must be verified against the unit to ensure proper fit.

Sax

Material : AcrylX

Features

- AcrylX™ surface resistant to stains
- Bathtub skirt available in 4 colours: White, Sterling Silver, Black, Thunder Grey
- Maximized bathing well with comfortable backrest
- 2-piece bathtub for easy transportation and seamless installation
- Compatible with F2 drain connector to save time and money on installation
- MAAX innovative leveling legs for easy installation
- High gloss finish resistant to dulling, scratching, and fading
- Transitional design to fit any bathroom style
- Product Warranty: limited lifetime

SAX 6032 FREESTANDING BATHTUB - 105797

SKU	System	Color	Configuration	Dimensions & Weight	Packaging	MSRP
105797-000-002-100	Soaker - No System	White	End Drain	60” x 32” x 24 7/8” / 130 lb	32 ft^3	$ 1946
105797-000-002-125		Black				$ 1946
105797-000-002-126		Sterling Silver				$ 1946
105797-000-002-127		Thunder Grey				$ 1946

COMMON OPTIONS

SKU	Description	MSRP
OPT20137-004	Cable-operated waste and overflow (16 in. to 22 in.) (included in product packaging when purchased) Available colors: White **(001)**, Bone **(004)**, Chrome **(084)** and Brushed Nickel **(105)**	$ 362
OPT20137-084		$ 362
OPT20137-105		$ 362
OPT20137-001		$ 362
OPT20210-084	Waste and overflow (16 in. to 22 in.) (included in product packaging when purchased) Available colors: Chrome **(084)** and Brushed Nickel **(105)**	$ 136
OPT20210-105		$ 182
106020-000-002-000	Apron only (sold separately as a replacement part) Available standard apron color: White apron **(002)**	$ 1218

ACCESSORIES

SKU	Description	MSRP
10012135-105	Waste and overflow (16 to 22 in.) (sold separately) Available colours: Chrome **(084)** and Brushed Nickel **(105)**	$ 182
10012135-084		$ 136
10032754	F^2 Drain kit for high-rise construction for freestanding bathtub installation (sold separately) Respects National Building Code of Canada (CAN/ULC-S102.2 flame and smoke protection) for high rise construction Minimum space required for assembly is 10 3/8 inches Compatible exclusively with MAAX freestanding bathtubs.	$ 402
10032757	F^2 Drain - Pack of 12 ABS kits for freestanding bathtub installation (sold separately) Minimum space required for assembly is 10 3/8 inches Compatible exclusively with MAAX freestanding bathtubs.	$ 2710
10004306-001	White foam cushion with 2 suction pads (sold separately) Available color: White **(001)**	$ 138
10022491-004	Cable-operated waste and overflow (16 in. to 22 in.) (sold separately) Available colors: White **(001)**, Bone **(004)**, Chrome **(084)** and Brushed Nickel **(105)**	$ 362

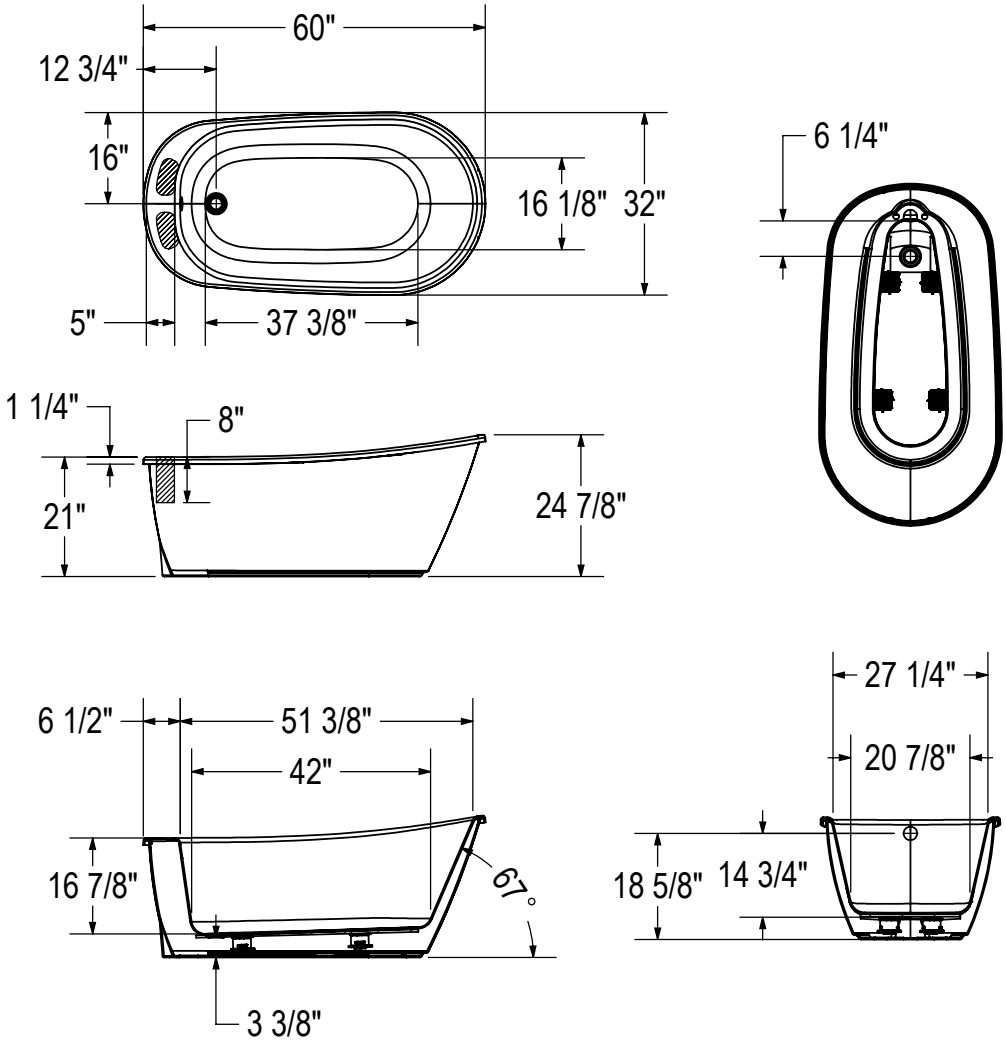

(▥) : Recommended faucet area 2 sections of 7" (L) x 3" (W).
Depth recommended for straight pipes 8".

All dimensions are approximate. Structure measurements must be verified against the unit to ensure proper fit.

Go to Table of Contents

Aiiki 6636

Material : Acrylic

Features

- Cube inspired lines with an urban touch and comfortable design
- Comfortable inclined backrests and maximized bathing well
- Drop-in installation with end drain
- Magnetic cushion available in black or white (optional)
- Magnet backed headrest for cushion. Factory installed only if cushion ordered on initial order

AIIKI 6636 - 102787

SKU	System	Color	Configuration	Dimensions & Weight	Packaging	MSRP
102787-000-001-000	Soaker - No System	White	End Drain	66” x 36” x 23 1/2” / 67 lb	39 ft^3	$ 1874
102787-054-001-100	Hydrofeel [1 4]					$ 6109
102787-055-001	Aerofeel [1 5]					$ 6218
102787-056-001	Combined Hydrofeel & Aerofeel [1 4 5]					$ 9589

COMMON OPTIONS

SKU	Description	MSRP
OPT10054	Two chromatherapy lights for bathtubs without waterfall (factory installed)	$ 1010
OPT10095	Water heater assembly for whirlpool and combined systems (factory installed)	$ 1033
OPT20139	Ozonator for whirlpool system (factory installed)	$ 670
OPT10118-084	ABS trim kit for whirlpool and combined systems (factory installed) Available colors: Chrome **(084)** and Brushed Nickel **(105)**	$ 287
OPT10118-105		$ 287
OPT10119-105	Metal trim kit for Aerofeel electronic control (factory installed) Available colors: Chrome **(084)** and Brushed Nickel **(105)**	$ 107
OPT10119-084		$ 107
OPT20205	Lite option 3/8 in. thin deck [6] When chosen, this option is offered at no cost	$ 0

ACCESSORIES

SKU	Description	MSRP
10013029-015	Minimalist cushion (magnetic) (sold separately for Optik and Aiiki) Available colours: White **(001)** and Black **(015)**	$ 262
10013029-001		$ 262
10033272	Flexible main hose for electronic control air massage - kit (sold separately) 15 ft. extension	$ 407
10025081-084	Waste and overflow 27 in. flexible neck (sold separately) Available colors: Chrome **(084)** and Brushed Nickel **(105)**	$ 489
10025081-105		$ 489

FOOTNOTES

No	Description
1	Components for standard colour units equipped with systems are colour-coordinated. Trim kit and/or air push with metallic finish can be added (additional charge applies). For non-standard colour units, please specify trim kit and/or air push colour (additional charge applies for metallic finishes). Please note that the positioning of the system’s control could be in conflict with the door if one was installed on the unit. To insure compatibility, please contact customer service.
4	For details on pump position and requirements, see technical drawings on https://www.maax.com. When there is a pump position A or B indicated on the technical drawing, please specify position when ordering.
5	For details on blower position and requirements, see technical drawings on https://www.maax.com. When there is a blower position A or B indicated on the technical drawing, please specify position when ordering.
6	Specify 3/8 (Lite option) or 2 in. on deck height. If ordering unit with an apron, only 2 in. deck height is available.

WHIRLPOOL SYSTEM

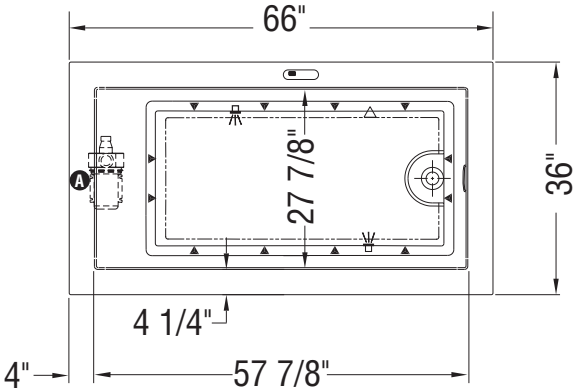

AIR SYSTEM

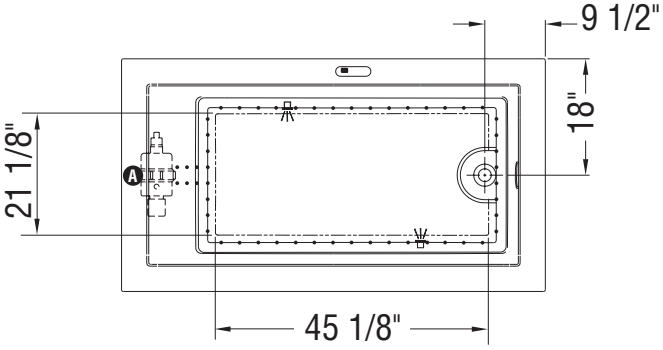

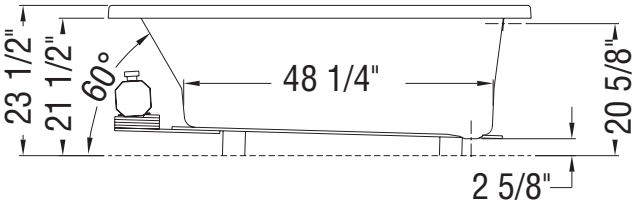

Note: Air backjets on same side as blower

(▲) : Indicates whirlpool jets positioning

(△) : Indicates suction positioning

(•) : Indicates airjets positioning

( ) : Indicates chromatherapy light positioning

Ⓐ : Indicates pump or blower positioning

Bathtub base includes anti-vibration Neutra-Phone leg supports (not shown).

All dimensions are approximate. Structure measurements must be verified against the unit to ensure proper fit.

Aiiki 7236

Material : Acrylic

Features

- Cube inspired lines with an urban touch and comfortable design
- Comfortable inclined backrests and maximized bathing well
- Drop-in installation with end drain
- Magnetic cushion available in black or white (optional)
- Magnet backed headrest for cushion. Factory installed only if cushion ordered on initial order

AIIKI 7236 - 102786

SKU	System	Color	Configuration	Dimensions & Weight	Packaging	MSRP
102786-000-001-000	Soaker - No System	White	End Drain	72” x 36” x 23 1/2” / 75 lb	44 ft^3	$ 2336
102786-054-001-100	Hydrofeel [1 4]					$ 6571
102786-055-001	Aerofeel [1 5]					$ 6680
102786-056-001	Combined Hydrofeel & Aerofeel [1 4 5]					$ 10051

COMMON OPTIONS

SKU	Description	MSRP
OPT10054	Two chromatherapy lights for bathtubs without waterfall (factory installed)	$ 1010
OPT10095	Water heater assembly for whirlpool and combined systems (factory installed)	$ 1033
OPT20139	Ozonator for whirlpool system (factory installed)	$ 670
OPT10118-084	ABS trim kit for whirlpool and combined systems (factory installed) Available colors: Chrome **(084)** and Brushed Nickel **(105)**	$ 287
OPT10118-105		$ 287
OPT10119-105	Metal trim kit for Aerofeel electronic control (factory installed) Available colors: Chrome **(084)** and Brushed Nickel **(105)**	$ 107
OPT10119-084		$ 107
OPT20205	Lite option 3/8 in. thin deck [6] When chosen, this option is offered at no cost	$ 0

ACCESSORIES

SKU	Description	MSRP
10013029-015	Minimalist cushion (magnetic) (sold separately for Optik and Aiiki) Available colours: White **(001)** and Black **(015)**	$ 262
10013029-001		$ 262
10033272	Flexible main hose for electronic control air massage - kit (sold separately) 15 ft. extension	$ 407
10025081-084	Waste and overflow 27 in. flexible neck (sold separately) Available colors: Chrome **(084)** and Brushed Nickel **(105)**	$ 489
10025081-105		$ 489

FOOTNOTES

No	Description
1	Components for standard colour units equipped with systems are colour-coordinated. Trim kit and/or air push with metallic finish can be added (additional charge applies). For non-standard colour units, please specify trim kit and/or air push colour (additional charge applies for metallic finishes). Please note that the positioning of the system’s control could be in conflict with the door if one was installed on the unit. To insure compatibility, please contact customer service.
4	For details on pump position and requirements, see technical drawings on https://www.maax.com. When there is a pump position A or B indicated on the technical drawing, please specify position when ordering.
5	For details on blower position and requirements, see technical drawings on https://www.maax.com. When there is a blower position A or B indicated on the technical drawing, please specify position when ordering.
6	Specify 3/8 (Lite option) or 2 in. on deck height. If ordering unit with an apron, only 2 in. deck height is available.

WHIRLPOOL SYSTEM

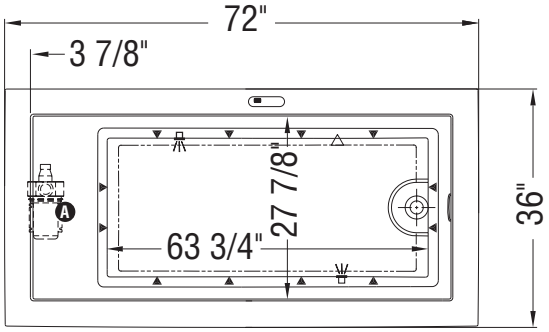

AIR SYSTEM

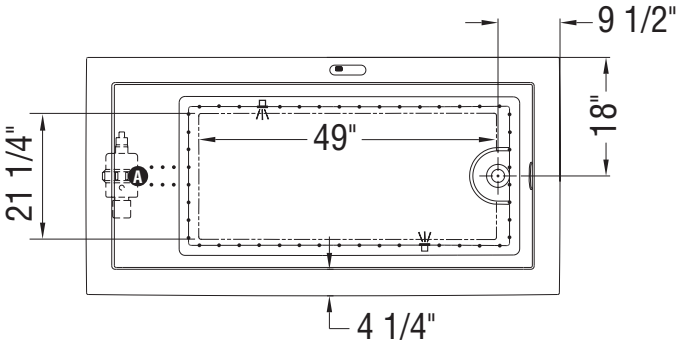

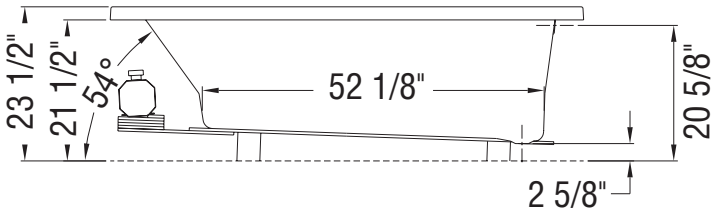

Note: Air backjets on same side as blower

(▲) : Indicates whirlpool jets positioning

(△) : Indicates suction positioning

(•) : Indicates airjets positioning

( ) : Indicates chromatherapy light positioning

Bathtub base includes anti-vibration Neutra-Phone leg supports (not shown).

All dimensions are approximate. Structure measurements must be verified against the unit to ensure proper fit.

Ⓐ : Indicates pump or blower positioning

Go to Table of Contents

Aiiki 7242

Material : Acrylic

Features

- Cube inspired lines with an urban touch and comfortable design
- Comfortable inclined backrests and maximized bathing well
- Drop-in installation with back center drain
- Magnetic cushion available in black or white (optional)
- Magnet backed headrest for cushion. Factory installed only if cushion ordered on initial order

AIIKI 7242 - 102785

SKU	System	Color	Configuration	Dimensions & Weight	Packaging	MSRP
102785-000-001-000	Soaker - No System	White	Center Drain	72” x 42” x 23 1/2” / 110 lb	53 ft^3	$ 2550
102785-054-001-100	Hydrofeel [1 4]					$ 6785
102785-055-001	Aerofeel [1 5]					$ 6894
102785-056-001	Combined Hydrofeel & Aerofeel [1 4 5]					$ 10265

COMMON OPTIONS

SKU	Description	MSRP
OPT10054	Two chromatherapy lights for bathtubs without waterfall (factory installed)	$ 1010
OPT10095	Water heater assembly for whirlpool and combined systems (factory installed)	$ 1033
OPT20139	Ozonator for whirlpool system (factory installed)	$ 670
OPT10118-084	ABS trim kit for whirlpool and combined systems (factory installed) Available colors: Chrome **(084)** and Brushed Nickel **(105)**	$ 287
OPT10118-105		$ 287
OPT10119-105	Metal trim kit for Aerofeel electronic control (factory installed) Available colors: Chrome **(084)** and Brushed Nickel **(105)**	$ 107
OPT10119-084		$ 107
OPT20205	Lite option 3/8 in. thin deck [6] When chosen, this option is offered at no cost	$ 0

ACCESSORIES

SKU	Description	MSRP
10013029-015	Minimalist cushion (magnetic) (sold separately for Optik and Aiiki) Available colours: White **(001)** and Black **(015)**	$ 262
10013029-001		$ 262
10033272	Flexible main hose for electronic control air massage - kit (sold separately) 15 ft. extension	$ 407
10025081-084	Waste and overflow 27 in. flexible neck (sold separately) Available colors: Chrome **(084)** and Brushed Nickel **(105)**	$ 489
10025081-105		$ 489

FOOTNOTES

No	Description
1	Components for standard colour units equipped with systems are colour-coordinated. Trim kit and/or air push with metallic finish can be added (additional charge applies). For non-standard colour units, please specify trim kit and/or air push colour (additional charge applies for metallic finishes). Please note that the positioning of the system’s control could be in conflict with the door if one was installed on the unit. To insure compatibility, please contact customer service.
4	For details on pump position and requirements, see technical drawings on https://www.maax.com. When there is a pump position A or B indicated on the technical drawing, please specify position when ordering.
5	For details on blower position and requirements, see technical drawings on https://www.maax.com. When there is a blower position A or B indicated on the technical drawing, please specify position when ordering.
6	Specify 3/8 (Lite option) or 2 in. on deck height. If ordering unit with an apron, only 2 in. deck height is available.

WHIRLPOOL SYSTEM

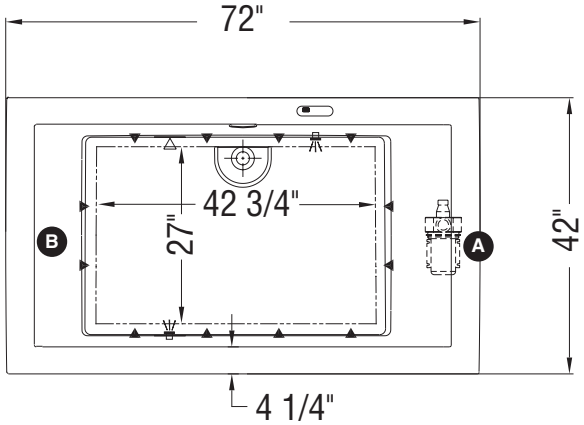

AIR SYSTEM

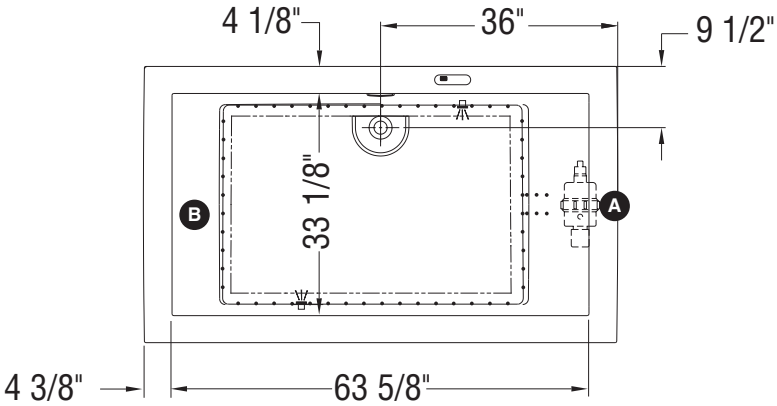

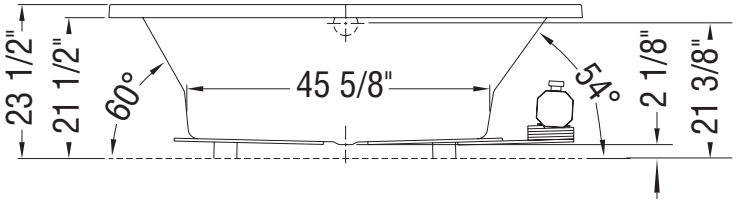

Note: Air backjets on same side as blower

(▲) : Indicates whirlpool jets positioning
(△) : Indicates suction positioning
(•) : Indicates airjets positioning
( ) : Indicates chromatherapy light positioning

Bathtub base includes anti-vibration Neutra-Phone leg supports (not shown).

All dimensions are approximate. Structure measurements must be verified against the unit to ensure proper fit.

A B : Specify blower and/or pump location when ordering

Baccarat

Material : Acrylic

Features

- Large, sumptuous bathtub to spread out and relax
- Armrests with ergonomic backrest and raised bottom design
- Drop-in or alcove installation with end drain, apron available
- Two optional 6-in. metal or acrylic grab bars (factory installed)
- For alcove installation, specify tiling flange
- White cushion included with whirlpool and combined systems

BACCARAT - 102945

SKU	System	Color	Configuration	Dimensions & Weight	Packaging	MSRP
102945-000-001	Soaker - No System	White	End Drain	71 1/2” x 35 5/8” x 20 3/4” / 78 lb	34 ft^3	$ 1884
102945-004-001	Hydromax [1 4 17]					$ 6228
102945-055-001	Aerofeel [1 5]					$ 6228
102945-094-001	Combined Hydromax & Aerofeel [1 4 5 17]					$ 9700

COMMON OPTIONS

SKU	Description	MSRP
OPT10106-084	Metal trim kit for whirlpool and combined systems (factory installed) Available colors: Chrome **(084)** and Brushed Nickel **(105)**	$ 728
OPT10106-105		$ 728
OPT10119-105	Metal trim kit for Aerofeel electronic control (factory installed) Available colors: Chrome **(084)** and Brushed Nickel **(105)**	$ 107
OPT10119-084		$ 107
OPT10260-084	Two 6-in. acrylic grab bars (factory installed) [8] Available colors: White **(001)**, Bone **(004)**, Biscuit **(007)**, Chrome **(084)** and Brushed Nickel **(105)**	$ 392
OPT10260-007		$ 392
OPT10260-004		$ 392
OPT10260-105		$ 392
OPT10260-001		$ 392
OPT20141	Rest for Hydromax and combined systems [12]	$ 1173
OPT10054	Two chromatherapy lights for bathtubs without waterfall (factory installed)	$ 1010
OPT10095	Water heater assembly for whirlpool and combined systems (factory installed)	$ 1033
OPT20139	Ozonator for whirlpool system (factory installed)	$ 670
100216-000-001-000	Removable acrylic apron, covers front side of bathtub only Specify: Standard colors: White **(001)**, Bone **(004)**, Biscuit **(007)**	$ 905

ACCESSORIES

SKU	Description	MSRP
10006917	Tiling flange, 1 x 72 in., 2 x 36 in. (sold separately)	$ 133
10033272	Flexible main hose for electronic control air massage - kit (sold separately) 15 ft. extension	$ 407
10004306-001	White foam cushion with 2 suction pads (sold separately) Available color: White **(001)**	$ 138
10025081-084	Waste and overflow 27 in. flexible neck (sold separately) Available colors: Chrome **(084)** and Brushed Nickel **(105)**	$ 489
10025081-105		$ 489

FOOTNOTES

No	Description
1	Components for standard colour units equipped with systems are colour-coordinated. Trim kit and/or air push with metallic finish can be added (additional charge applies). For non-standard colour units, please specify trim kit and/or air push colour (additional charge applies for metallic finishes). Please note that the positioning of the system's control could be in conflict with the door if one was installed on the unit. To insure compatibility, please contact customer service.
4	For details on pump position and requirements, see technical drawings on https://www.maax.com. When there is a pump position A or B indicated on the technical drawing, please specify position when ordering.
5	For details on blower position and requirements, see technical drawings on https://www.maax.com. When there is a blower position A or B indicated on the technical drawing, please specify position when ordering.
8	Two 6 in. or 12 in. metal or acrylic grab bars are optional. Factory installed, only one positioning is possible (see technical drawings on https://www.maax.com).
12	In combined systems, only the pump is replaced with the Rest. The blower remains the same.
17	Includes Backmax and Footmax jets. Souvenir with apron and Living bathtub models do not include Footmax jets.

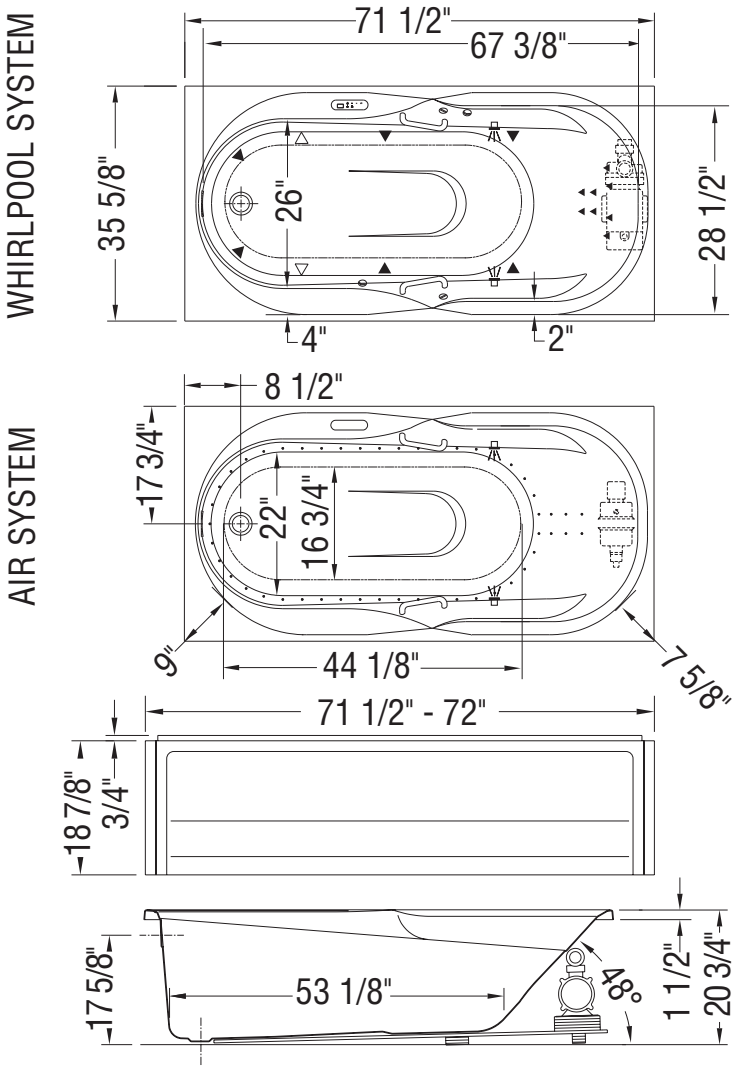

(▲) : Indicates whirlpool jets positioning
(△) : Indicates suction positioning
(•) : Indicates airjets positioning
(⌒) : Indicates standard grab bar positioning
(⚥) : Indicates chromatherapy light positioning
Bathtub base includes anti-vibration Neutra-Phone leg supports (not shown).
All dimensions are approximate. Structure measurements must be verified against the unit to ensure proper fit.

ModulR 6032 - Corner left

Material : Acrylic

Features

- Two-piece bathtub with removable toe-kick
- Ample deck space for faucet installation
- Integrated tiling flange on the skirt and bathtub
- Lockable adjustable legs for ease of installation
- Above-the-Floor Rough (AFR)

MODULR 6032 LEFT (WITH ARMRESTS) - 410008

SKU	System	Color	Configuration	Dimensions & Weight	Packaging	MSRP
410008-000-001-102	Soaker - No System	White	Left Drain	59 5/8” x 31 7/8” x 23” / 150 lb	29 ft^3	$ 2471
410008-000-001-103			Right Drain			$ 2471

MODULR 6032 LEFT (WITHOUT ARMRESTS) - 410011

SKU	System	Color	Configuration	Dimensions & Weight	Packaging	MSRP
410011-000-001-102	Soaker - No System	White	Left Drain	59 5/8” x 31 7/8” x 23” / 150 lb	29 ft^3	$ 2471
410011-000-001-103			Right Drain			$ 2471

COMMON OPTIONS

SKU	Description	MSRP
OPT20312-105	Flexible waste and overflow (included in product packaging) Available colour: Chrome **(084)** and Brushed Nickel **(105)**	$ 373
OPT20312-084		$ 0
OPT20250-084	Brass flexible waste and overflow for high-rise construction Available colors: Chrome **(084)** and Brushed Nickel **(105)**	$ 556
OPT20250-105		$ 647
OPT20251-001	Access Panel: White **(001)** (52 5/8 X 18 1/2 in.)	$ 465

ACCESSORIES

SKU	Description	MSRP
10060311	Corner glass shelf (9 3/8 x 9 3/8 in.) (sold separately) 10 mm frosted glass with a clear band along the edge Compatible with Utile and tile shower walls	$ 174
10004306-001	White foam cushion with 2 suction pads (sold separately) Available color: White **(001)**	$ 138
10032807-084	Flexible waste and overflow (sold separately) Available colors: Chrome **(084)** and Brushed Nickel **(105)**	$ 284
10032807-105		$ 373
10032808-084	Brass flexible waste and overflow for high construction (sold separately) Available colors: Chrome **(084)** and Brushed Nickel **(105)**	$ 556
10032808-105		$ 647

ModuIR BATHTUB: 60X32 WITH ARMREST

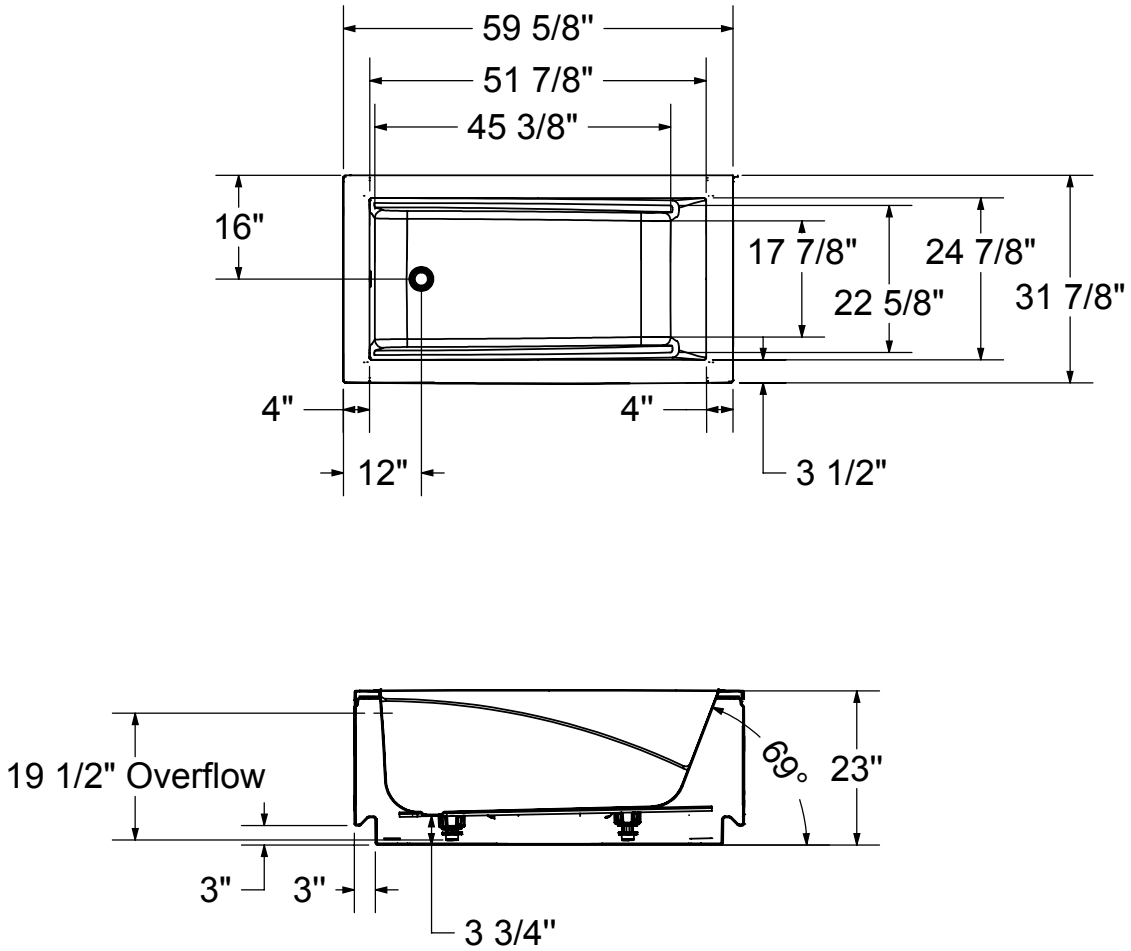

This technical drawing is universal for all ModuIR Tub configurations. (Left/Right Corner & Wall-mounted)

Integrated tiling flange: 1” height x 3/8” thick (not shown)
Tiling flange position is determined by chosen configuration.

All dimensions are approximate. Structure measurements must be verified against the unit to ensure proper fit.

ModulR 6032 - Corner right

Material : Acrylic

Features

- Two-piece bathtub with removable toe-kick
- Deck-mounted faucets
- Integrated tiling flange on the skirt and bathtub
- Lockable adjustable legs for ease of installation
- 3” Above-The-Floor Rough

MODULR 6032 RIGHT (WITH ARMRESTS) - 410007

SKU	System	Color	Configuration	Dimensions & Weight	Packaging	MSRP
410007-000-001-100	Soaker - No System	White	Left Drain	59 5/8” x 31 7/8” x 24” / 150 lb	29 ft^3	$ 2471
410007-000-001-101			Right Drain			$ 2471

MODULR 6032 RIGHT (WITHOUT ARMRESTS) - 410010

SKU	System	Color	Configuration	Dimensions & Weight	Packaging	MSRP
410010-000-001-100	Soaker - No System	White	Left Drain	59 5/8” x 31 7/8” x 24” / 150 lb	29 ft^3	$ 2471
410010-000-001-101			Right Drain			$ 2471

COMMON OPTIONS

SKU	Description	MSRP
OPT20312-105	Flexible waste and overflow (included in product packaging) Available colour: Chrome **(084)** and Brushed Nickel **(105)**	$ 373
OPT20312-084		$ 0
OPT20250-084	Brass flexible waste and overflow for high-rise construction Available colors: Chrome **(084)** and Brushed Nickel **(105)**	$ 556
OPT20250-105		$ 647
OPT20251-001	Access Panel: White **(001)** (52 5/8 X 18 1/2 in.)	$ 465

ACCESSORIES

SKU	Description	MSRP
10060311	Corner glass shelf (9 3/8 x 9 3/8 in.) (sold separately) 10 mm frosted glass with a clear band along the edge Compatible with Utile and tile shower walls	$ 174
10004306-001	White foam cushion with 2 suction pads (sold separately) Available color: White **(001)**	$ 138
10032807-084	Flexible waste and overflow (sold separately) Available colors: Chrome **(084)** and Brushed Nickel **(105)**	$ 284
10032807-105		$ 373
10032808-084	Brass flexible waste and overflow for high construction (sold separately) Available colors: Chrome **(084)** and Brushed Nickel **(105)**	$ 556
10032808-105		$ 647

ModuIR BATHTUB: 60X32 WITH ARMREST

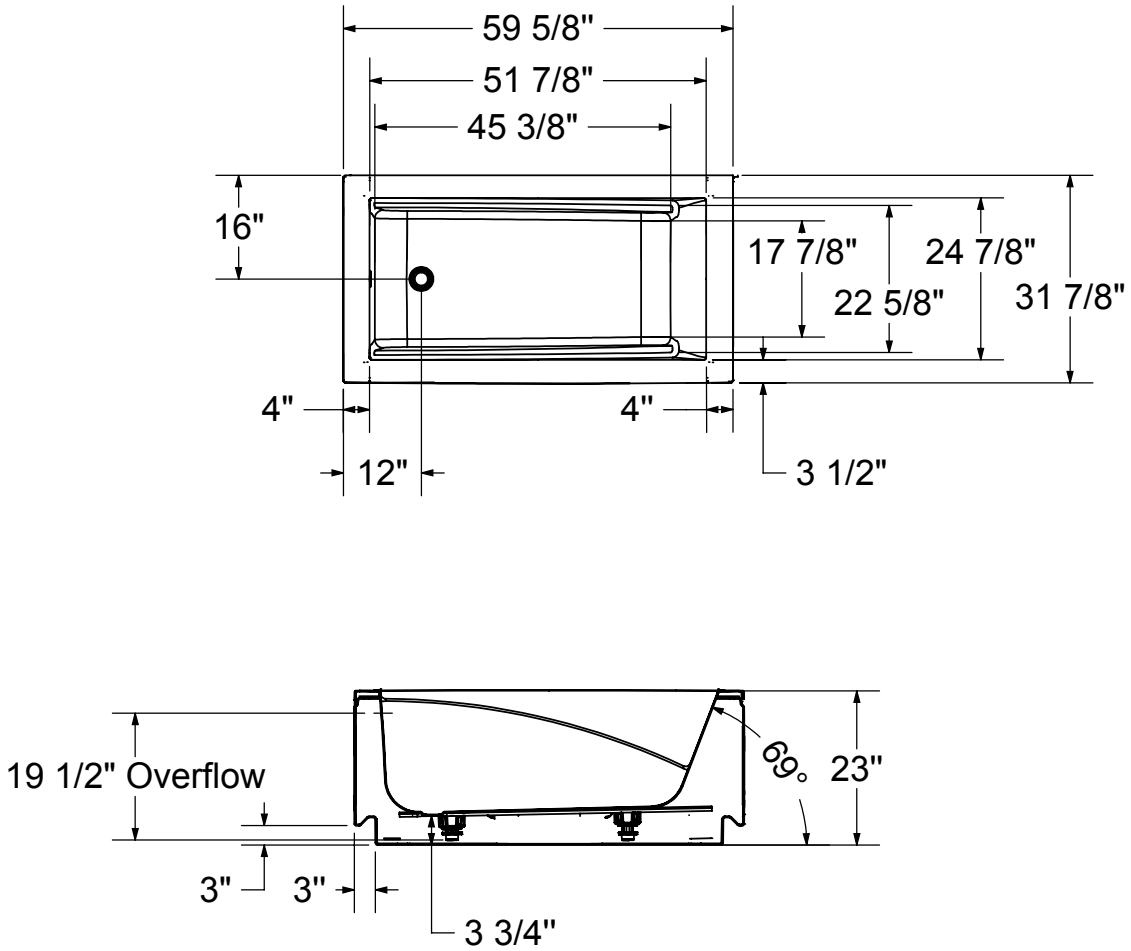

This technical drawing is universal for all ModuIR Tub configurations. (Left/Right Corner & Wall-mounted)

Integrated tiling flange: 1” height x 3/8” thick (not shown)
Tiling flange position is determined by chosen configuration.

All dimensions are approximate. Structure measurements must be verified against the unit to ensure proper fit.

ModulR 6032 - Drop-in

Material : Acrylic

Features

- Two-piece rectangular bathtub with sleek and refined look
- 2 interior types available (with or without armrests)
- Drop-in or alcove installation with integrated tiling flange (IF)
- Ample deck space for faucet installation
- Above-the-floor Rough (AFR)
- Optional apron with integrated toe-kick for alcove installation only

MODULR 6032 IF (WITH ARMRESTS) - 410021

SKU	System	Color	Configuration	Dimensions & Weight	Packaging	MSRP
410021-000-001-148	Soaker - No System	White	Left Drain	59 5/8” x 31 7/8” x 23” / 75 lb	31 ft^3	$ 1762
410021-000-001-173			Right Drain			$ 1762

MODULR 6032 IF (WITHOUT ARMRESTS) - 410022

SKU	System	Color	Configuration	Dimensions & Weight	Packaging	MSRP
410022-000-001-148	Soaker - No System	White	Left Drain	59 5/8” x 31 7/8” x 23” / 75 lb	31 ft^3	$ 1762
410022-000-001-173			Right Drain			$ 1762

MODULR 6032 (WITH ARMRESTS) - 410023

SKU	System	Color	Configuration	Dimensions & Weight	Packaging	MSRP
410023-000-001-000	Soaker - No System	White	End Drain	59 5/8” x 31 7/8” x 23” / 75 lb	31 ft^3	$ 1762

MODULR 6032 (WITHOUT ARMRESTS) - 410024

SKU	System	Color	Configuration	Dimensions & Weight	Packaging	MSRP
410024-000-001-000	Soaker - No System	White	End Drain	59 5/8” x 31 7/8” x 23” / 75 lb	31 ft^3	$ 1762

COMMON OPTIONS

SKU	Description	MSRP
OPT20249-105	Flexible waste and overflow (included in product packaging when purchased) Available colors: Chrome **(084)** and Brushed Nickel **(105)**	$ 373
OPT20249-084		$ 284
OPT20250-084	Brass flexible waste and overflow for high-rise construction Available colors: Chrome **(084)** and Brushed Nickel **(105)**	$ 556
OPT20250-105		$ 647
OPT20409-001	Non-removable apron with integrated toe-kick Available in White **(001)** only	$ 465

ACCESSORIES

SKU	Description	MSRP
10060311	Corner glass shelf (9 3/8 x 9 3/8 in.) (sold separately) 10 mm frosted glass with a clear band along the edge Compatible with Utile and tile shower walls	$ 174
10004306-001	White foam cushion with 2 suction pads (sold separately) Available color: White **(001)**	$ 138
10025081-084	Waste and overflow 27 in. flexible neck (sold separately) Available colors: Chrome **(084)** and Brushed Nickel **(105)**	$ 489
10025081-105		$ 489
10032807-084	Flexible waste and overflow (sold separately) Available colors: Chrome **(084)** and Brushed Nickel **(105)**	$ 284
10032807-105		$ 373
10032808-084	Brass flexible waste and overflow for high construction (sold separately) Available colors: Chrome **(084)** and Brushed Nickel **(105)**	$ 556

ACCESSORIES

SKU	Description	MSRP
10032808-105	Brass flexible waste and overflow for high construction (sold separately) Available colors: Chrome **(084)** and Brushed Nickel **(105)**	$ 647

RECOMMENDED DOORS - VISIT OUR WEBSITE FOR A COMPLETE LIST OF RECOMMENDED DOORS

SKU	Product Name	Pag.
139398	Halo 56 ½-59 x 59 - 8mm	990
135330	Incognito 57 Shaker 56-59 x 56 3/4 in. 8mm Tub Door	1005
105409	Mika 54 - 59 ½ x 55 in.	1015
136695	Revelation Round 56-59 x 56 ¾-59 ¼ - 8 mm	1018
135692	Revelation Square 56-59 x 56 ¾-58 ¼ - 6mm	1020
136270	Duel 56-59 x 55 1/2-59	1003
138760	Inverto 56-59 x 55 ½-59 - 8mm	1013
134573	Kameleon 55-59 x 57 - 8mm	997
135695	Revelation Square 56-59 x 56 ¾-59 ¼ - 8mm	1022
134670	Kameleon SC 55-59 x 57 - 8mm	991
105410	Polar 54-59 1/2 x 57 1/2 in.	1017
134561	Kameleon 55-59 x 57 - 6mm	999
138480	Vela 56 ½-59 x 59 - 8mm	986
138485		988
134661	Kameleon SC 55-59 x 57 - 6mm	995
136692	Revelation Round 56-59 x 56 3/4-59 1/4	1017
135320	Uptown 56-59 x 58 in. 8 mm	1024
139354	Incognito 57 56-59 x 56 3/4 in. 8mm Tub Door	1011
139351	Incognito 57 56-59 x 56 3/4 in. 6mm Tub Door	1007

ModuIR BATHTUB: 60X32 WITH ARMREST

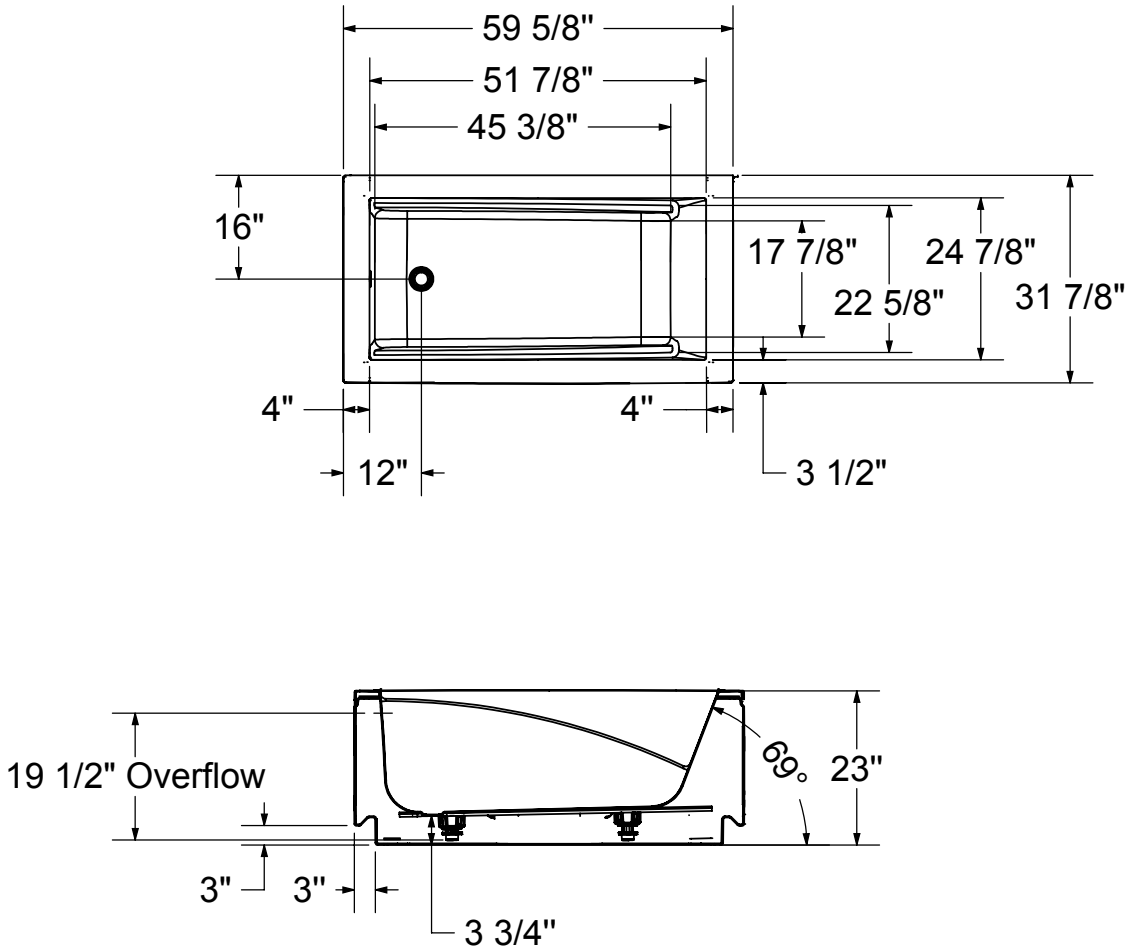

This technical drawing is universal for all ModuIR Tub configurations. (Left/Right Corner & Wall-mounted)

Integrated tiling flange: 1” height x 3/8” thick (not shown)
Tiling flange position is determined by chosen configuration.

All dimensions are approximate. Structure measurements must be verified against the unit to ensure proper fit.

ModulR 6032 - Wall-Mount

Material : Acrylic

Features

- Two-piece bathtub with removable toe-kick
- Ample deck space for faucet installation
- Integrated tiling flange on the skirt and bathtub
- Lockable adjustable legs for ease of installation
- 3 in. Above-the-Floor Rough (AFR)

MODULR 6032 WALL MOUNTED (WITH ARMRESTS) - 410009

SKU	System	Color	Configuration	Dimensions & Weight	Packaging	MSRP
410009-000-001-104	Soaker - No System	White	Left Drain	59 5/8” x 31 7/8” x 23” / 150 lb	29 ft^3	$ 2471
410009-000-001-105			Right Drain			$ 2471

MODULR 6032 WALL MOUNTED (WITHOUT ARMRESTS) - 410012

SKU	System	Color	Configuration	Dimensions & Weight	Packaging	MSRP
410012-000-001-104	Soaker - No System	White	Left Drain	59 5/8” x 31 7/8” x 23” / 150 lb	29 ft^3	$ 2471
410012-000-001-105			Right Drain			$ 2471

COMMON OPTIONS

SKU	Description	MSRP
OPT20312-105	Flexible waste and overflow (included in product packaging) Available colour: Chrome **(084)** and Brushed Nickel **(105)**	$ 373
OPT20312-084		$ 0
OPT20250-084	Brass flexible waste and overflow for high-rise construction Available colors: Chrome **(084)** and Brushed Nickel **(105)**	$ 556
OPT20250-105		$ 647
OPT20251-001	Access Panel: White **(001)** (52 5/8 X 18 1/2 in.)	$ 465

ACCESSORIES

SKU	Description	MSRP
10060311	Corner glass shelf (9 3/8 x 9 3/8 in.) (sold separately) 10 mm frosted glass with a clear band along the edge Compatible with Utile and tile shower walls	$ 174
10004306-001	White foam cushion with 2 suction pads (sold separately) Available color: White **(001)**	$ 138
10032807-084	Flexible waste and overflow (sold separately) Available colors: Chrome **(084)** and Brushed Nickel **(105)**	$ 284
10032807-105		$ 373
10032808-084	Brass flexible waste and overflow for high construction (sold separately) Available colors: Chrome **(084)** and Brushed Nickel **(105)**	$ 556
10032808-105		$ 647

ModuIR BATHTUB: 60X32 WITH ARMREST

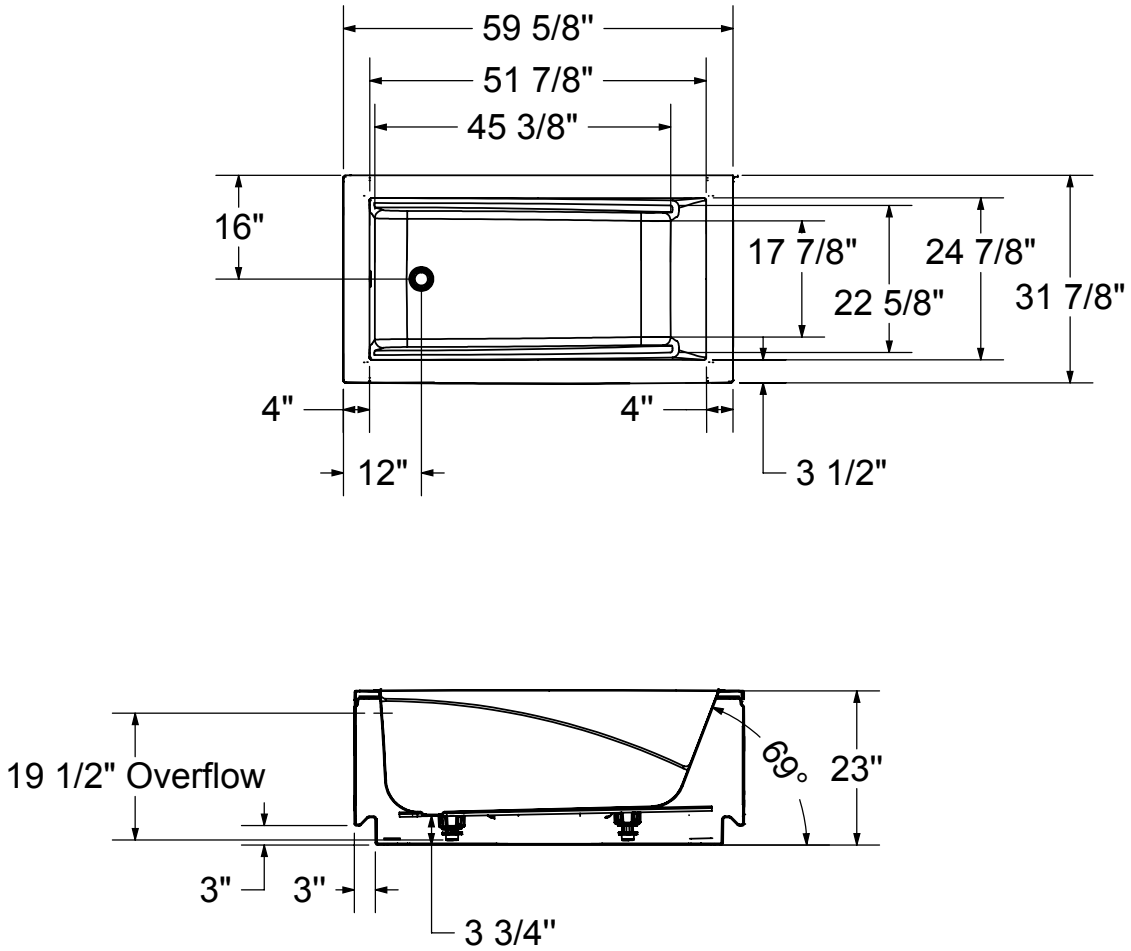

This technical drawing is universal for all ModuIR Tub configurations. (Left/Right Corner & Wall-mounted)

Integrated tiling flange: 1” height x 3/8” thick (not shown)
Tiling flange position is determined by chosen configuration.

All dimensions are approximate. Structure measurements must be verified against the unit to ensure proper fit.

ModulR 6032 IF - Corner left

Material : Acrylic

Features

- Rectangular bathtub with sleek and refined look
- 2 interior types available (with or without armrests)
- Drop-in or alcove installation with integrated tiling flange (IF)
- Ample deck space for faucet installation
- Optional apron with integrated toe-kick for alcove installation only
- Right or left-hand drain, regardless of the installation type

MODULR 6032 IF LEFT (WITH ARMRESTS) - 410027

SKU	System	Color	Configuration	Dimensions & Weight	Packaging	MSRP
410027-000-001-163	Soaker - No System	White	Left Drain	59 5/8” x 31 7/8” x 23” / 75 lb	31 ft^3	$ 1762
410027-000-001-164			Right Drain			$ 1762

MODULR 6032 IF LEFT (WITHOUT ARMRESTS) - 410028

SKU	System	Color	Configuration	Dimensions & Weight	Packaging	MSRP
410028-000-001-163	Soaker - No System	White	Left Drain	59 5/8” x 31 7/8” x 23” / 75 lb	31 ft^3	$ 1762
410028-000-001-164			Right Drain			$ 1762

COMMON OPTIONS

SKU	Description	MSRP
OPT20249-105	Flexible waste and overflow (included in product packaging when purchased) Available colors: Chrome **(084)** and Brushed Nickel **(105)**	$ 373
OPT20249-084		$ 284
OPT20250-084	Brass flexible waste and overflow for high-rise construction Available colors: Chrome **(084)** and Brushed Nickel **(105)**	$ 556
OPT20250-105		$ 647

ACCESSORIES

SKU	Description	MSRP
10060311	Corner glass shelf (9 3/8 x 9 3/8 in.) (sold separately) 10 mm frosted glass with a clear band along the edge Compatible with Utile and tile shower walls	$ 174
10004306-001	White foam cushion with 2 suction pads (sold separately) Available color: White **(001)**	$ 138
10032807-084	Flexible waste and overflow (sold separately) Available colors: Chrome **(084)** and Brushed Nickel **(105)**	$ 284
10032807-105		$ 373
10032808-084	Brass flexible waste and overflow for high construction (sold separately) Available colors: Chrome **(084)** and Brushed Nickel **(105)**	$ 556
10032808-105		$ 647

ModuIR BATHTUB: 60X32 WITH ARMREST

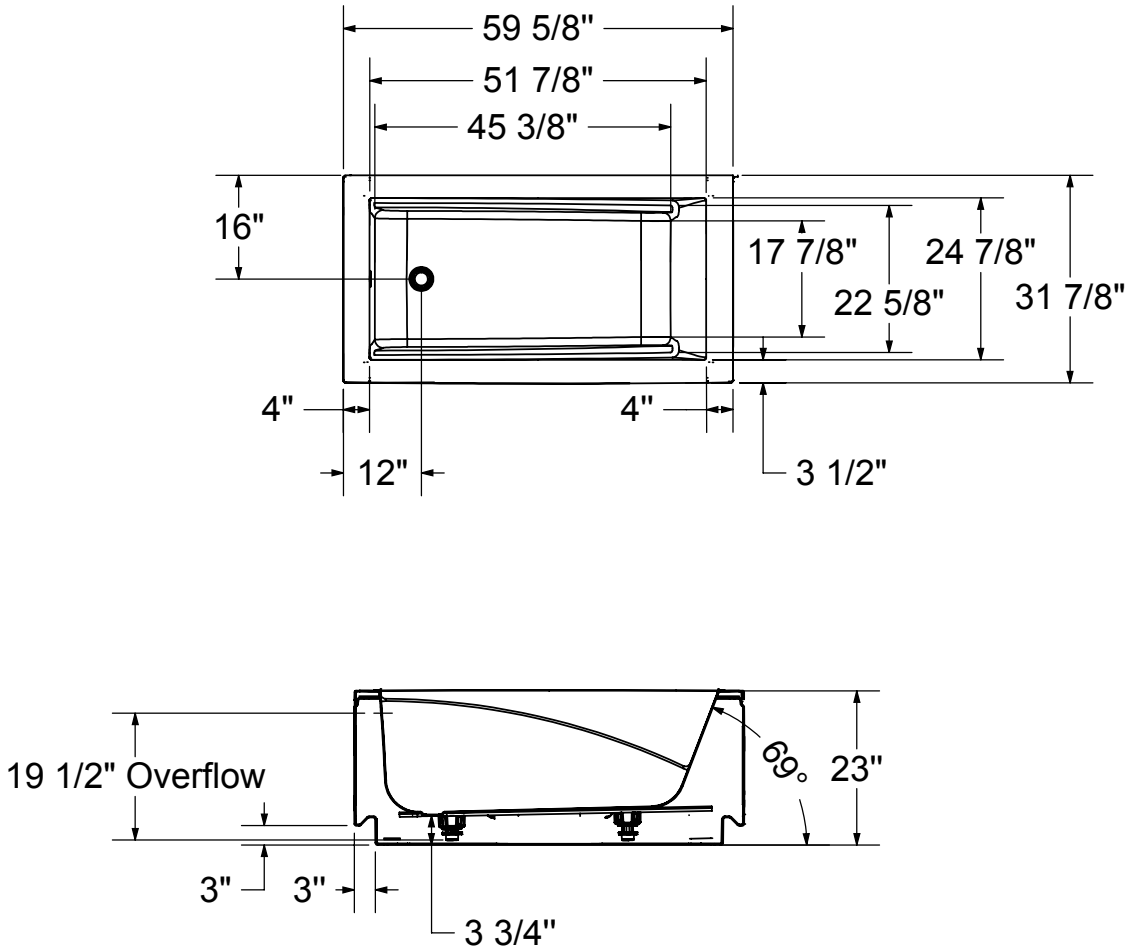

This technical drawing is universal for all ModuIR Tub configurations. (Left/Right Corner & Wall-mounted)

Integrated tiling flange: 1” height x 3/8” thick (not shown)
Tiling flange position is determined by chosen configuration.

All dimensions are approximate. Structure measurements must be verified against the unit to ensure proper fit.

ModulR 6032 IF - Corner right

Material : Acrylic

Features

- Two-piece rectangular bathtub with sleek and refined look
- 2 interior types available (with or without armrests)
- Integrated tiling flange (IF) for corner installation
- Ample deck space for faucet installation
- Right or left-hand drain, regardless of the installation type

MODULR 6032 IF RIGHT (WITH ARMRESTS) - 410025

SKU	System	Color	Configuration	Dimensions & Weight	Packaging	MSRP
410025-000-001-153	Soaker - No System	White	Left Drain	59 5/8” x 31 7/8” x 23” / 75 lb	31 ft^3	$ 1762
410025-000-001-154			Right Drain			$ 1762

MODULR 6032 IF RIGHT (WITHOUT ARMRESTS) - 410026

SKU	System	Color	Configuration	Dimensions & Weight	Packaging	MSRP
410026-000-001-153	Soaker - No System	White	Left Drain	59 5/8” x 31 7/8” x 23” / 75 lb	31 ft^3	$ 1762
410026-000-001-154			Right Drain			$ 1762

COMMON OPTIONS

SKU	Description	MSRP
OPT20249-105	Flexible waste and overflow (included in product packaging when purchased) Available colors: Chrome **(084)** and Brushed Nickel **(105)**	$ 373
OPT20249-084		$ 284
OPT20250-084	Brass flexible waste and overflow for high-rise construction Available colors: Chrome **(084)** and Brushed Nickel **(105)**	$ 556
OPT20250-105		$ 647

ACCESSORIES

SKU	Description	MSRP
10060311	Corner glass shelf (9 3/8 x 9 3/8 in.) (sold separately) 10 mm frosted glass with a clear band along the edge Compatible with Utile and tile shower walls	$ 174
10004306-001	White foam cushion with 2 suction pads (sold separately) Available color: White **(001)**	$ 138
10032807-084	Flexible waste and overflow (sold separately) Available colors: Chrome **(084)** and Brushed Nickel **(105)**	$ 284
10032807-105		$ 373
10032808-084	Brass flexible waste and overflow for high construction (sold separately) Available colors: Chrome **(084)** and Brushed Nickel **(105)**	$ 556
10032808-105		$ 647

ModuIR BATHTUB: 60X32 WITH ARMREST

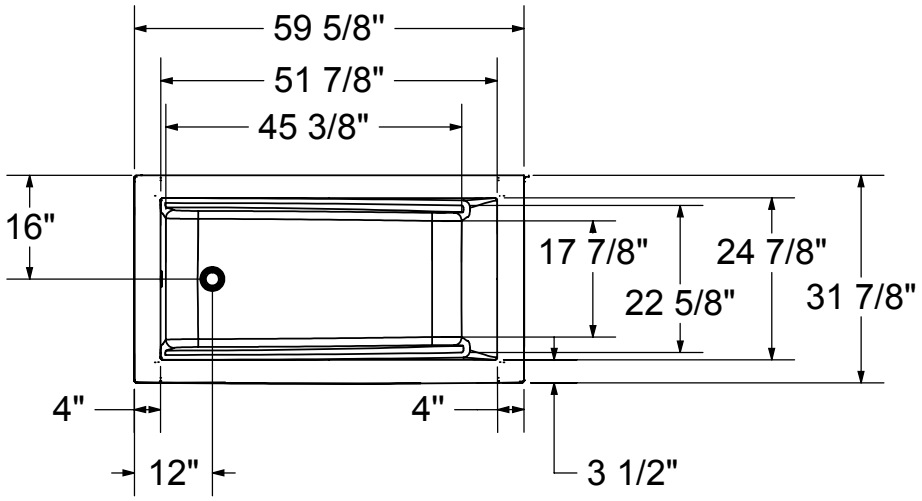

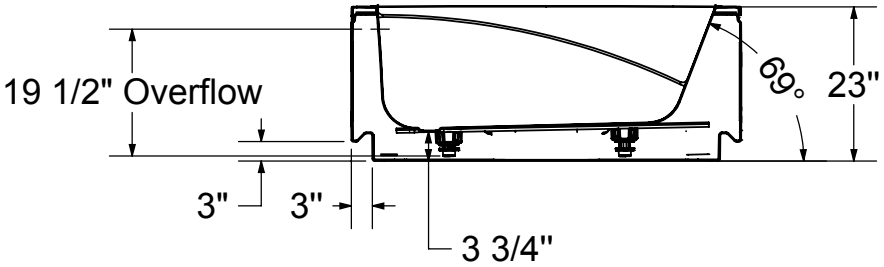

This technical drawing is universal for all ModuIR Tub configurations. (Left/Right Corner & Wall-mounted)

Integrated tiling flange: 1” height x 3/8” thick (not shown)
Tiling flange position is determined by chosen configuration.

All dimensions are approximate. Structure measurements must be verified against the unit to ensure proper fit.

Optik 6032

Material : Acrylic

Features

- Sleek bathtub combines straight and curvaceous lines
- Inclined backrest, curvaceous armrests and deep bathing well
- Ample deck space for faucet installation
- Undermount, drop-in or alcove installation with end drain
- Apron with access panel and 12 in. grab bars available, sold separately
- Magnetic cushion available in black or white, sold separately
- Magnet backed headrest for cushion. Factory installed only if cushion ordered on initial order

OPTIK 6032 - 101265

SKU	System	Color	Configuration	Dimensions & Weight	Packaging	MSRP
101265-000-001-000	Soaker - No System	White	End Drain	59 3/4” x 32” x 20” / 64 lb	26 ft³	$ 1297
101265-000-001-001			Left Drain			$ 1297
101265-000-001-002			Right Drain			$ 1297
101265-054-001-100	Hydrofeel [1 4]		End Drain			$ 5532
101265-055-001-100	Aerofeel [1 5]					$ 5641
101265-055-001-102			Right Drain			$ 5641
101265-055-001-103			Left Drain			$ 5641
101265-056-001	Combined Hydrofeel & Aerofeel [1 4 5]		End Drain			$ 9012
101265-L-054-001	Hydrofeel [1 4]		Left Drain			$ 5532
101265-L-056-001	Combined Hydrofeel & Aerofeel [1 4 5]					$ 9012
101265-R-054-001	Hydrofeel [1 4]		Right Drain			$ 5532
101265-R-056-001	Combined Hydrofeel & Aerofeel [1 4 5]					$ 9012

COMMON OPTIONS

SKU	Description	MSRP
OPT10119-105	Metal trim kit for Aerofeel electronic control (factory installed) Available colors: Chrome **(084)** and Brushed Nickel **(105)**	$ 107
OPT10119-084		$ 107
OPT20110-105	Metal trim kit for Whirlpool and combined systems (factory installed) Available colors: Chrome **(084)** and Brushed Nickel **(105)**	$ 403
OPT20110-084		$ 403
OPT10097-001	Two 12 in. metal grab bars (factory installed) in White **(001)**	$ 743
OPT10097-004	Two 12 in. metal grab bars (factory installed) in Bone **(004)**	$ 743
OPT10097-007	Two 12 in. metal grab bars (factory installed) in Biscuit **(007)**	$ 743
OPT10097-084	Two 12 in. metal grab bars (factory installed) in Chrome **(084)**	$ 743
OPT10097-105	Two 12 in. metal grab bars (factory installed) in Brushed Nickel **(105)**	$ 743
OPT20141	Rest for Hydromax and combined systems [12]	$ 1173
OPT10054	Two chromatherapy lights for bathtubs without waterfall (factory installed)	$ 1010
OPT10095	Water heater assembly for whirlpool and combined systems (factory installed)	$ 1033
OPT20139	Ozonator for whirlpool system (factory installed)	$ 670
101251-000-001-000	Apron with access panel (magnetic) Specify: Standard colors: White **(001)**, Bone **(004)**, Biscuit **(007)**	$ 820
OPT20205	Lite option 3/8 in. thin deck [6] When chosen, this option is offered at no cost	$ 0

ACCESSORIES

SKU	Description	MSRP
10013029-015	Minimalist cushion (magnetic) (sold separately for Optik and Aiiki) Available colours: White **(001)** and Black **(015)**	$ 262
10013029-001		$ 262
10033272	Flexible main hose for electronic control air massage - kit (sold separately) 15 ft. extension	$ 407
10025081-084	Waste and overflow 27 in. flexible neck (sold separately) Available colors: Chrome **(084)** and Brushed Nickel **(105)**	$ 489
10025081-105		$ 489

FOOTNOTES

No	Description
1	Components for standard colour units equipped with systems are colour-coordinated. Trim kit and/or air push with metallic finish can be added (additional charge applies). For non-standard colour units, please specify trim kit and/or air push colour (additional charge applies for metallic finishes). Please note that the positioning of the system's control could be in conflict with the door if one was installed on the unit. To insure compatibility, please contact customer service.
4	For details on pump position and requirements, see technical drawings on https://www.maax.com. When there is a pump position A or B indicated on the technical drawing, please specify position when ordering.
5	For details on blower position and requirements, see technical drawings on https://www.maax.com. When there is a blower position A or B indicated on the technical drawing, please specify position when ordering.
6	Specify 3/8 (Lite option) or 2 in. on deck height. If ordering unit with an apron, only 2 in. deck height is available.
12	In combined systems, only the pump is replaced with the Rest. The blower remains the same.

RECOMMENDED DOORS - VISIT OUR WEBSITE FOR A COMPLETE LIST OF RECOMMENDED DOORS

SKU	Product Name	Pag.
139398	Halo 56 ½-59 x 59 - 8mm	990
134661	Kameleon SC 55-59 x 57 - 6mm	995
135330	Incognito 57 Shaker 56-59 x 56 3/4 in. 8mm Tub Door	1005
105409	Mika 54 - 59 ½ x 55 in.	1015
136695	Revelation Round 56-59 x 56 ¾-59 ¼ - 8 mm	1018
135692	Revelation Square 56-59 x 56 ¾-58 ¼ - 6mm	1020
136692	Revelation Round 56-59 x 56 3/4-59 1/4	1017
136270	Duel 56-59 x 55 1/2-59	1003
138760	Inverto 56-59 x 55 ½-59 - 8mm	1013
134573	Kameleon 55-59 x 57 - 8mm	997
135695	Revelation Square 56-59 x 56 ¾-59 ¼ - 8mm	1022
134670	Kameleon SC 55-59 x 57 - 8mm	991
105410	Polar 54-59 1/2 x 57 1/2 in.	1017
134561	Kameleon 55-59 x 57 - 6mm	999
138480	Vela 56 ½-59 x 59 - 8mm	986
138485		988
135320	Uptown 56-59 x 58 in. 8 mm	1024
139354	Incognito 57 56-59 x 56 3/4 in. 8mm Tub Door	1011
139351	Incognito 57 56-59 x 56 3/4 in. 6mm Tub Door	1007

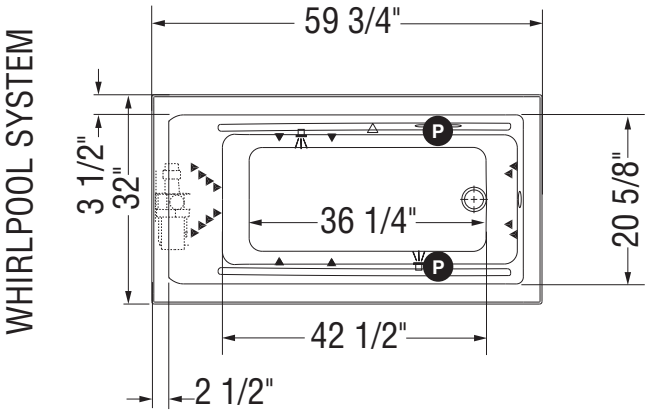

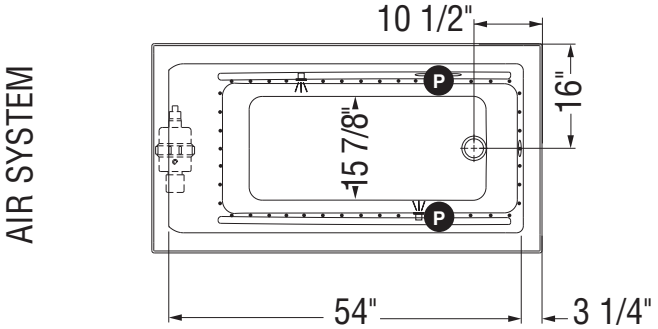

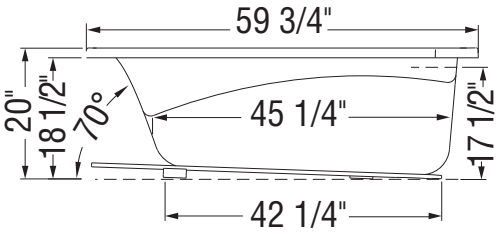

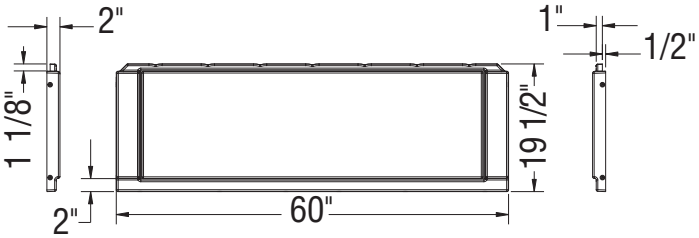

(Ⓟ) : Indicates optional grab bar positioning
(▲) : Indicates whirlpool jets positioning
(△) : Indicates suction positioning
(•) : Indicates airjets positioning
(⚳) : Indicates chromatherapy light positioning
Bathtub base includes anti-vibration Neutra-Phone leg supports (not shown).
All dimensions are approximate. Structure measurements must be verified against the unit to ensure proper fit.

Optik 6636

Material : Acrylic

Features

- Sleek bathtub combines straight and curvaceous lines
- Inclined backrest, curvaceous armrests and deep bathing well
- Ample deck space for faucet installation
- Undermount, drop-in or alcove installation with end drain
- Apron with access panel and 12 in. grab bars available as an option
- Magnetic cushion available in black or white
- Magnet backed headrest for cushion. Factory installed only if cushion ordered on initial order

OPTIK 6636 - 101269

SKU	System	Color	Configuration	Dimensions & Weight	Packaging	MSRP
101269-000-001-000	Soaker - No System	White	End Drain	65 3/4” x 36” x 21 1/8” / 70 lb	31 ft³	$ 1874
101269-054-001-100	Hydrofeel [1 4]					$ 6109
101269-055-001-100	Aerofeel [1 5]					$ 6218
101269-056-001	Combined Hydrofeel & Aerofeel [1 4 5]					$ 9589
101269-L-000-001	Soaker - No System		Left Drain			$ 1874
101269-L-054-001	Hydrofeel [1 4]					$ 6109
101269-L-055-001	Aerofeel [1 5]					$ 6218
101269-L-056-001	Combined Hydrofeel & Aerofeel [1 4 5]					$ 9589
101269-R-000-001	Soaker - No System		Right Drain			$ 1874
101269-R-054-001	Hydrofeel [1 4]					$ 6109
101269-R-055-001	Aerofeel [1 5]					$ 6218
101269-R-056-001	Combined Hydrofeel & Aerofeel [1 4 5]					$ 9589

COMMON OPTIONS

SKU	Description	MSRP
OPT10097-084	Two 12 in. metal grab bars (factory installed) in Chrome **(084)**	$ 743
OPT10097-105	Two 12 in. metal grab bars (factory installed) in Brushed Nickel **(105)**	$ 743
OPT10054	Two chromatherapy lights for bathtubs without waterfall (factory installed)	$ 1010
OPT10095	Water heater assembly for whirlpool and combined systems (factory installed)	$ 1033
OPT20139	Ozonator for whirlpool system (factory installed)	$ 670
OPT10119-105	Metal trim kit for Aerofeel electronic control (factory installed) Available colors: Chrome **(084)** and Brushed Nickel **(105)**	$ 107
OPT10119-084		$ 107
OPT20110-105	Metal trim kit for Whirlpool and combined systems (factory installed) Available colors: Chrome **(084)** and Brushed Nickel **(105)**	$ 403
OPT20110-084		$ 403
OPT20141	Rest for Hydromax and combined systems [12]	$ 1173
OPT10097-001	Two 12 in. metal grab bars (factory installed) in White **(001)**	$ 743
OPT10097-004	Two 12 in. metal grab bars (factory installed) in Bone **(004)**	$ 743
OPT10097-007	Two 12 in. metal grab bars (factory installed) in Biscuit **(007)**	$ 743
101264-000-001-000	Apron with access panel (magnetic) Specify: Standard colors: White **(001)**, Bone **(004)**, Biscuit **(007)**	$ 820
OPT20205	Lite option 3/8 in. thin deck [6] When chosen, this option is offered at no cost	$ 0

ACCESSORIES

SKU	Description	MSRP
10013029-015	Minimalist cushion (magnetic) (sold separately for Optik and Aiiki) Available colours: White **(001)** and Black **(015)**	$ 262
10013029-001		$ 262
10033272	Flexible main hose for electronic control air massage - kit (sold separately) 15 ft. extension	$ 407
10025081-084	Waste and overflow 27 in. flexible neck (sold separately) Available colors: Chrome **(084)** and Brushed Nickel **(105)**	$ 489
10025081-105		$ 489

FOOTNOTES

No	Description
1	Components for standard colour units equipped with systems are colour-coordinated. Trim kit and/or air push with metallic finish can be added (additional charge applies). For non-standard colour units, please specify trim kit and/or air push colour (additional charge applies for metallic finishes). Please note that the positioning of the system's control could be in conflict with the door if one was installed on the unit. To insure compatibility, please contact customer service.
4	For details on pump position and requirements, see technical drawings on https://www.maax.com. When there is a pump position A or B indicated on the technical drawing, please specify position when ordering.
5	For details on blower position and requirements, see technical drawings on https://www.maax.com. When there is a blower position A or B indicated on the technical drawing, please specify position when ordering.
6	Specify 3/8 (Lite option) or 2 in. on deck height. If ordering unit with an apron, only 2 in. deck height is available.
12	In combined systems, only the pump is replaced with the Rest. The blower remains the same.

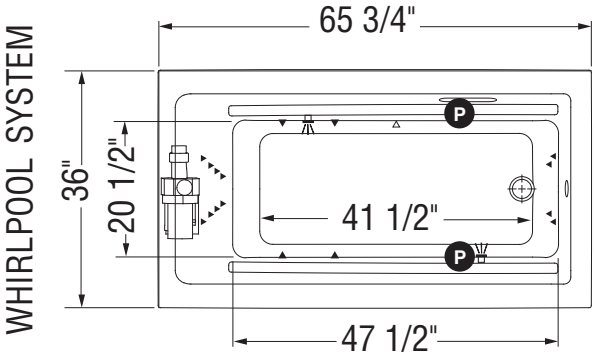

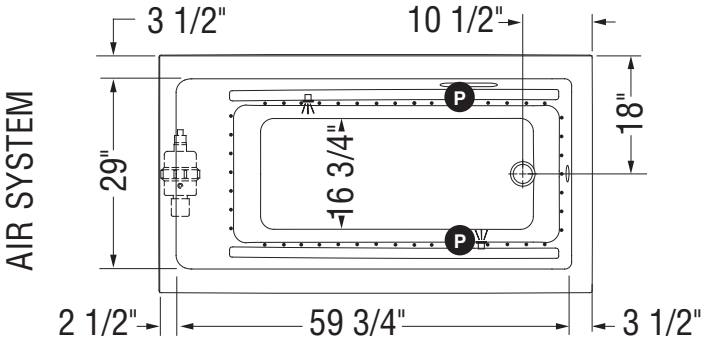

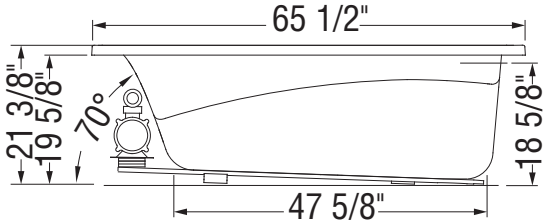

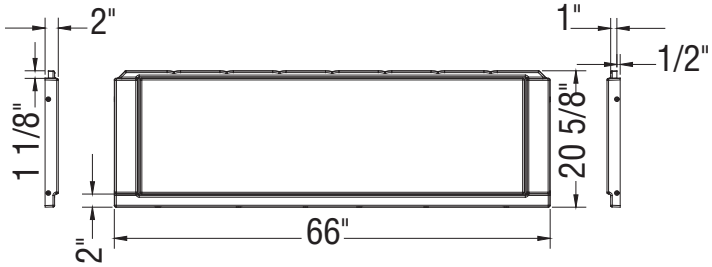

(Ⓟ) : Indicates optional grab bar positioning
(▲) : Indicates whirlpool jets positioning
(△) : Indicates suction positioning
(•) : Indicates airjets positioning
(Ψ) : Indicates chromatherapy light positioning
Bathtub base includes anti-vibration Neutra-Phone leg supports (not shown).
All dimensions are approximate. Structure measurements must be verified against the unit to ensure proper fit.

Go to Table of Contents

Optik 6636 C

Material : Acrylic

Features

- Sleek bathtub combines straight and curvaceous lines
- Inclined backrest, curvaceous inset armrests, deep bathing well
- Two deck widths for different styles of faucet
- Center drain and 4 adjustable leveling legs
- Above-the-Floor Rough (AFR)
- Undermount or drop-in installation with center drain

OPTIK C - 105743

SKU	System	Color	Configuration	Dimensions & Weight	Packaging	MSRP
105743-000-001-102	Soaker - No System	White	Center Drain	66” x 36” x 24” / 60 lb	37 ft^3	$ 1874
105743-054-001-000	Hydrofeel [1 4]					$ 6109
105743-055-001-000	Aerofeel [1 5]					$ 6218
105743-056-001-000	Combined Hydrofeel & Aerofeel [1 4 5]					$ 9589

COMMON OPTIONS

SKU	Description	MSRP
OPT20141	Rest for Hydromax and combined systems [12]	$ 1173
OPT10054	Two chromatherapy lights for bathtubs without waterfall (factory installed)	$ 1010
OPT10095	Water heater assembly for whirlpool and combined systems (factory installed)	$ 1033
OPT20139	Ozonator for whirlpool system (factory installed)	$ 670
OPT10119-105	Metal trim kit for Aerofeel electronic control (factory installed) Available colors: Chrome **(084)** and Brushed Nickel **(105)**	$ 107
OPT10119-084		$ 107
OPT20110-105	Metal trim kit for Whirlpool and combined systems (factory installed) Available colors: Chrome **(084)** and Brushed Nickel **(105)**	$ 403
OPT20110-084		$ 403
OPT20205	Lite option 3/8 in. thin deck [6] When chosen, this option is offered at no cost	$ 0

ACCESSORIES

SKU	Description	MSRP
10013029-015	Minimalist cushion (magnetic) (sold separately for Optik and Aiiki) Available colours: White **(001)** and Black **(015)**	$ 262
10013029-001		$ 262
10033272	Flexible main hose for electronic control air massage - kit (sold separately) 15 ft. extension	$ 407

FOOTNOTES

No	Description
1	Components for standard colour units equipped with systems are colour-coordinated. Trim kit and/or air push with metallic finish can be added (additional charge applies). For non-standard colour units, please specify trim kit and/or air push colour (additional charge applies for metallic finishes). Please note that the positioning of the system’s control could be in conflict with the door if one was installed on the unit. To insure compatibility, please contact customer service.
4	For details on pump position and requirements, see technical drawings on https://www.maax.com. When there is a pump position A or B indicated on the technical drawing, please specify position when ordering.
5	For details on blower position and requirements, see technical drawings on https://www.maax.com. When there is a blower position A or B indicated on the technical drawing, please specify position when ordering.
6	Specify 3/8 (Lite option) or 2 in. on deck height. If ordering unit with an apron, only 2 in. deck height is available.
12	In combined systems, only the pump is replaced with the Rest. The blower remains the same.

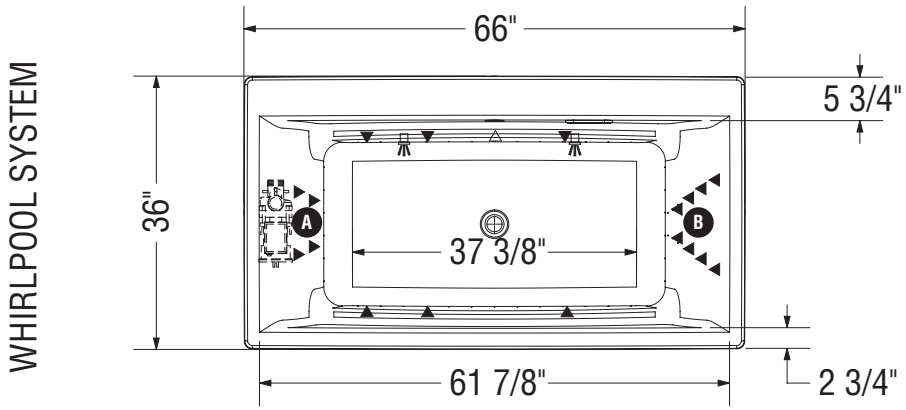

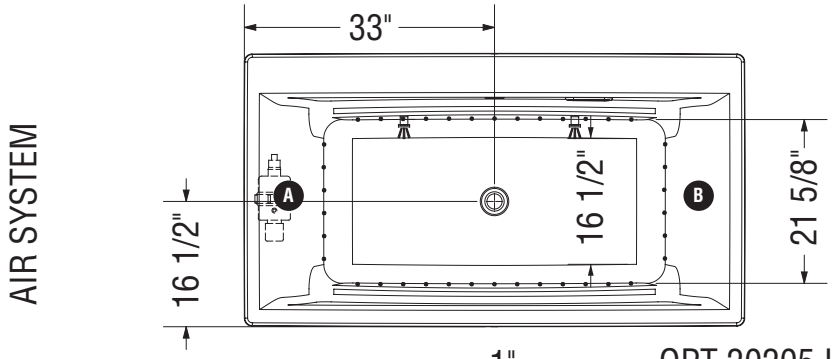

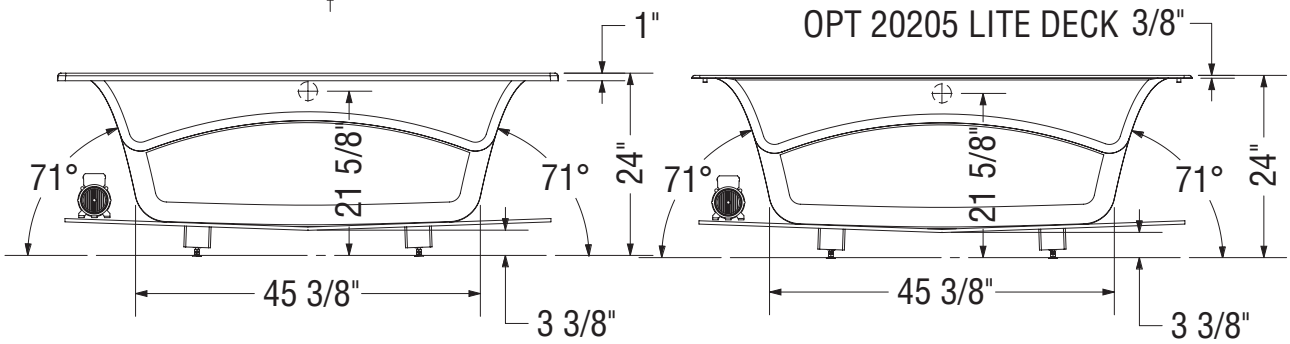

A B : Specify blower and/or pump location when ordering

(▲) : Indicates whirlpool jets positioning
(△) : Indicates suction positioning
(•) : Indicates Aerofeel airjets positioning
( ) : Indicates chromatherapy light positioning

All dimensions are approximate. Structure measurements must be verified against the unit to ensure proper fit.

Go to Table of Contents

Optik 7236

Material : Acrylic

Features

- Sleek bathtub combines straight and curvaceous lines
- Inclined backrest, curvaceous armrests and deep bathing well
- Ample deck space for faucet installation
- Undermount or drop-in installation with center drain
- Two 12 in. grab bars option available
- Magnetic cushion available in black or white
- Magnet backed headrest for cushion. Factory installed only if cushion ordered on initial order

OPTIK 7236 - 101270

SKU	System	Color	Configuration	Dimensions & Weight	Packaging	MSRP
101270-000-001-000	Soaker - No System	White	Center Drain	72” x 36” x 23 1/2” / 80 lb	44 ft^3	$ 2041
101270-054-001-100	Hydrofeel [1 4]					$ 6276
101270-055-001-100	Aerofeel [1 5]					$ 6385
101270-056-001	Combined Hydrofeel & Aerofeel [1 4 5]					$ 9756

COMMON OPTIONS

SKU	Description	MSRP
OPT20141	Rest for Hydromax and combined systems [12]	$ 1173
OPT10054	Two chromatherapy lights for bathtubs without waterfall (factory installed)	$ 1010
OPT10095	Water heater assembly for whirlpool and combined systems (factory installed)	$ 1033
OPT20139	Ozonator for whirlpool system (factory installed)	$ 670
OPT10119-105	Metal trim kit for Aerofeel electronic control (factory installed) Available colors: Chrome **(084)** and Brushed Nickel **(105)**	$ 107
OPT10119-084		$ 107
OPT20110-105	Metal trim kit for Whirlpool and combined systems (factory installed) Available colors: Chrome **(084)** and Brushed Nickel **(105)**	$ 403
OPT20110-084		$ 403
OPT10097-001	Two 12 in. metal grab bars (factory installed) in White **(001)**	$ 743
OPT10097-004	Two 12 in. metal grab bars (factory installed) in Bone **(004)**	$ 743
OPT10097-007	Two 12 in. metal grab bars (factory installed) in Biscuit **(007)**	$ 743
OPT10097-084	Two 12 in. metal grab bars (factory installed) in Chrome **(084)**	$ 743
OPT10097-105	Two 12 in. metal grab bars (factory installed) in Brushed Nickel **(105)**	$ 743
OPT20205	Lite option 3/8 in. thin deck [6] When chosen, this option is offered at no cost	$ 0

ACCESSORIES

SKU	Description	MSRP
10013029-015	Minimalist cushion (magnetic) (sold separately for Optik and Aiiki) Available colours: White **(001)** and Black **(015)**	$ 262
10013029-001		$ 262
10033272	Flexible main hose for electronic control air massage - kit (sold separately) 15 ft. extension	$ 407
10025081-084	Waste and overflow 27 in. flexible neck (sold separately) Available colors: Chrome **(084)** and Brushed Nickel **(105)**	$ 489
10025081-105		$ 489

FOOTNOTES

No	Description
1	Components for standard colour units equipped with systems are colour-coordinated. Trim kit and/or air push with metallic finish can be added (additional charge applies). For non-standard colour units, please specify trim kit and/or air push colour (additional charge applies for metallic finishes). Please note that the positioning of the system’s control could be in conflict with the door if one was installed on the unit. To insure compatibility, please contact customer service.

FOOTNOTES

No	Description
4	For details on pump position and requirements, see technical drawings on https://www.maax.com. When there is a pump position A or B indicated on the technical drawing, please specify position when ordering.
5	For details on blower position and requirements, see technical drawings on https://www.maax.com. When there is a blower position A or B indicated on the technical drawing, please specify position when ordering.
6	Specify 3/8 (Lite option) or 2 in. on deck height. If ordering unit with an apron, only 2 in. deck height is available.
12	In combined systems, only the pump is replaced with the Rest. The blower remains the same.

WHIRLPOOL SYSTEM

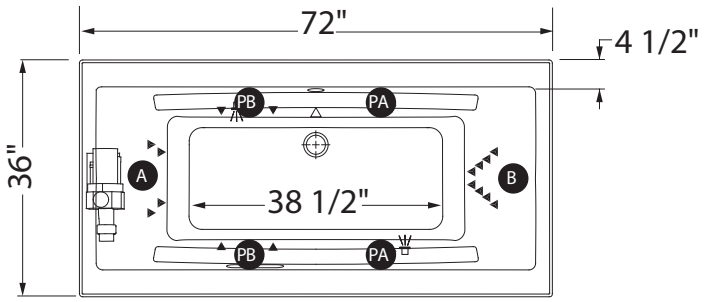

AIR SYSTEM

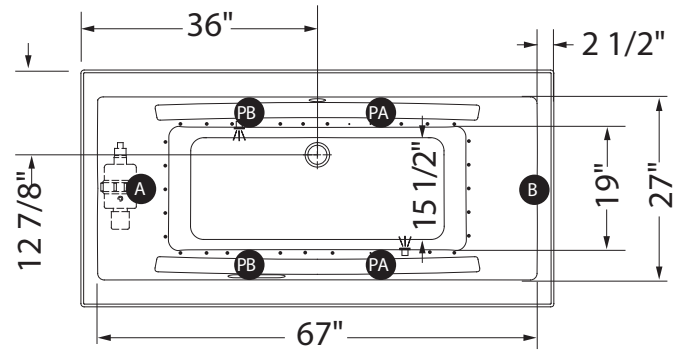

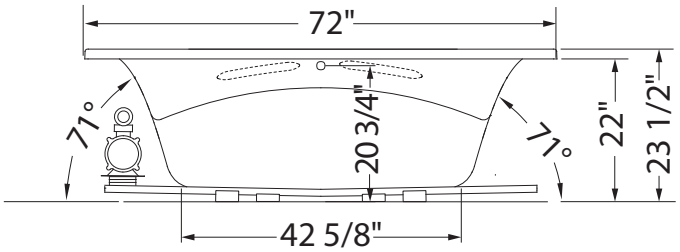

A B : Specify blower and/or pump location when ordering

PA PB : With system, the optional grab bar is on opposite side of the pump. Without system, specify optional grab bar location when ordering.

(▲) : Indicates whirlpool jets positioning
(△) : Indicates suction positioning
(•) : Indicates airjets positioning
( ) : Indicates chromatherapy light positioning

Bathtub base includes anti-vibration Neutra-Phone leg supports (not shown).
Blower must be installed at a distance.
The back massage is on the opposite side of the blower position.
All dimensions are approximate. Structure measurements must be verified against the unit to ensure proper fit.

Go to Table of Contents

Optik 7242

Material : Acrylic

Features

- Sleek bathtub combines straight and curvaceous lines
- Inclined backrest, curvaceous armrests and deep bathing well
- Ample deck space for faucet installation
- Undermount or drop-in installation with center drain
- Two 12 in. grab bars option available
- Magnetic cushion available in black or white
- Magnet backed headrest for cushion. Factory installed only if cushion ordered on initial order

OPTIK 7242 - 101275

SKU	System	Color	Configuration	Dimensions & Weight	Packaging	MSRP
101275-000-001-000	Soaker - No System	White	Center Drain	72” x 42” x 23 1/2” / 90 lb	53 ft^3	$ 2041
101275-054-001-100	Hydrofeel [1 4]					$ 6276
101275-055-001-100	Aerofeel [1 5]					$ 6385
101275-056-001	Combined Hydrofeel & Aerofeel [1 4 5]					$ 9756

COMMON OPTIONS

SKU	Description	MSRP
OPT20141	Rest for Hydromax and combined systems [12]	$ 1173
OPT10054	Two chromatherapy lights for bathtubs without waterfall (factory installed)	$ 1010
OPT10095	Water heater assembly for whirlpool and combined systems (factory installed)	$ 1033
OPT20139	Ozonator for whirlpool system (factory installed)	$ 670
OPT10119-105	Metal trim kit for Aerofeel electronic control (factory installed) Available colors: Chrome **(084)** and Brushed Nickel **(105)**	$ 107
OPT10119-084		$ 107
OPT20110-105	Metal trim kit for Whirlpool and combined systems (factory installed) Available colors: Chrome **(084)** and Brushed Nickel **(105)**	$ 403
OPT20110-084		$ 403
OPT10097-001	Two 12 in. metal grab bars (factory installed) in White **(001)**	$ 743
OPT10097-004	Two 12 in. metal grab bars (factory installed) in Bone **(004)**	$ 743
OPT10097-007	Two 12 in. metal grab bars (factory installed) in Biscuit **(007)**	$ 743
OPT10097-084	Two 12 in. metal grab bars (factory installed) in Chrome **(084)**	$ 743
OPT10097-105	Two 12 in. metal grab bars (factory installed) in Brushed Nickel **(105)**	$ 743
OPT20205	Lite option 3/8 in. thin deck [6] When chosen, this option is offered at no cost	$ 0

ACCESSORIES

SKU	Description	MSRP
10013029-015	Minimalist cushion (magnetic) (sold separately for Optik and Aiiki) Available colours: White **(001)** and Black **(015)**	$ 262
10013029-001		$ 262
10033272	Flexible main hose for electronic control air massage - kit (sold separately) 15 ft. extension	$ 407
10025081-084	Waste and overflow 27 in. flexible neck (sold separately) Available colors: Chrome **(084)** and Brushed Nickel **(105)**	$ 489
10025081-105		$ 489

FOOTNOTES

No	Description
1	Components for standard colour units equipped with systems are colour-coordinated. Trim kit and/or air push with metallic finish can be added (additional charge applies). For non-standard colour units, please specify trim kit and/or air push colour (additional charge applies for metallic finishes). Please note that the positioning of the system’s control could be in conflict with the door if one was installed on the unit. To insure compatibility, please contact customer service.

FOOTNOTES

No	Description
4	For details on pump position and requirements, see technical drawings on https://www.maax.com. When there is a pump position A or B indicated on the technical drawing, please specify position when ordering.
5	For details on blower position and requirements, see technical drawings on https://www.maax.com. When there is a blower position A or B indicated on the technical drawing, please specify position when ordering.
6	Specify 3/8 (Lite option) or 2 in. on deck height. If ordering unit with an apron, only 2 in. deck height is available.
12	In combined systems, only the pump is replaced with the Rest. The blower remains the same.

WHIRLPOOL SYSTEM

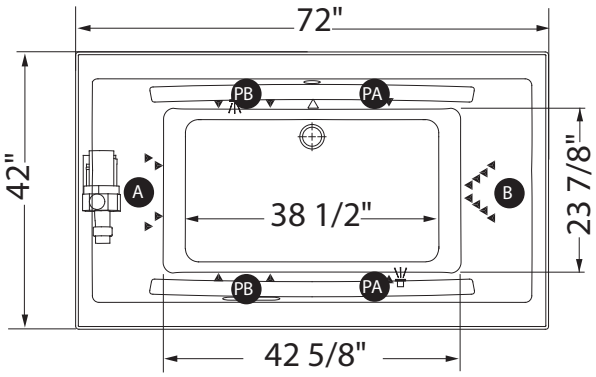

AIR SYSTEM

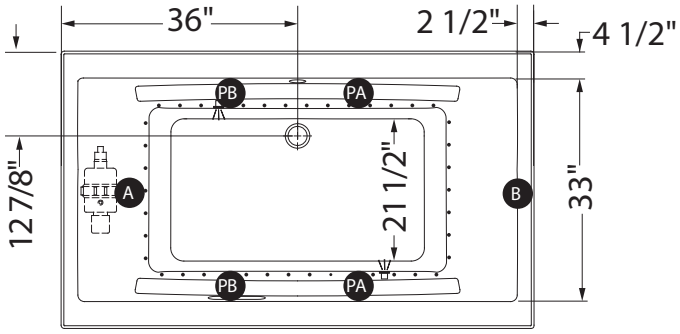

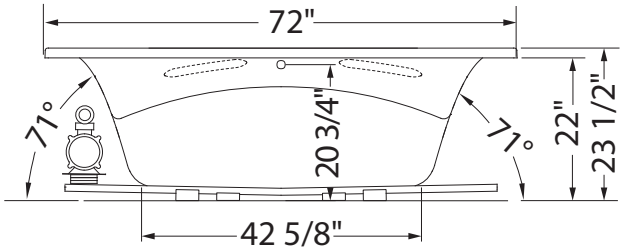

A B : Specify blower and/or pump location when ordering

PA PB : With system, the optional grab bar is on opposite side of the pump. Without system, specify optional grab bar location when ordering.

(▲) : Indicates whirlpool jets positioning
(△) : Indicates suction positioning
(•) : Indicates airjets positioning
( ) : Indicates chromatherapy light positioning

Bathtub base includes anti-vibration Neutra-Phone leg supports (not shown).
Blower must be installed at a distance.
The back massage is on the opposite side of the blower position.
All dimensions are approximate. Structure measurements must be verified against the unit to ensure proper fit.

Release 6032

Material : Acrylic

Features

- Spacious bathtub with ergonomic design
- Integrated recessed backrest for comfort
- Ample deck space for faucet installation
- Drop-in installation with end drain
- Integrated tilling flange available [21]

RELEASE 6032 - 105310

SKU	System	Color	Configuration	Dimensions & Weight	Packaging	MSRP
105310-000-001-100	Soaker - No System	White	End Drain	59 3/4” x 32” x 20” / 110 lb	31 ft³	$ 1743
105310-004-001	Hydromax [1 4 17]					$ 6087
105310-055-001-000	Aerofeel [1 5]					$ 6087
105310-094-001	Combined Hydromax & Aerofeel [1 4 5 17]					$ 9559
105310-L-000-001	Soaker - No System		Left Drain			$ 1743
105310-L-004-001	Hydromax [1 4 17]					$ 6087
105310-L-055-001	Aerofeel [1 5]					$ 6087
105310-L-094-001	Combined Hydromax & Aerofeel [1 4 5 17]					$ 9559
105310-R-000-001	Soaker - No System		Right Drain			$ 1743
105310-R-004-001	Hydromax [1 4 17]					$ 6087
105310-R-055-001	Aerofeel [1 5]					$ 6087
105310-R-094-001	Combined Hydromax & Aerofeel [1 4 5 17]					$ 9559

COMMON OPTIONS

SKU	Description	MSRP
OPT10054	Two chromatherapy lights for bathtubs without waterfall (factory installed)	$ 1010
OPT10095	Water heater assembly for whirlpool and combined systems (factory installed)	$ 1033
OPT20139	Ozonator for whirlpool system (factory installed)	$ 670
OPT10106-084	Metal trim kit for whirlpool and combined systems (factory installed) Available colors: Chrome **(084)** and Brushed Nickel **(105)**	$ 728
OPT10106-105		$ 728
OPT10119-105	Metal trim kit for Aerofeel electronic control (factory installed) Available colors: Chrome **(084)** and Brushed Nickel **(105)**	$ 107
OPT10119-084		$ 107
OPT20141	Rest for Hydromax and combined systems [12]	$ 1173

ACCESSORIES

SKU	Description	MSRP
10033272	Flexible main hose for electronic control air massage - kit (sold separately) 15 ft. extension	$ 407
10025081-084	Waste and overflow 27 in. flexible neck (sold separately) Available colors: Chrome **(084)** and Brushed Nickel **(105)**	$ 489
10025081-105		$ 489

FOOTNOTES

No	Description
1	Components for standard colour units equipped with systems are colour-coordinated. Trim kit and/or air push with metallic finish can be added (additional charge applies). For non-standard colour units, please specify trim kit and/or air push colour (additional charge applies for metallic finishes). Please note that the positioning of the system’s control could be in conflict with the door if one was installed on the unit. To insure compatibility, please contact customer service.

FOOTNOTES

No	Description
4	For details on pump position and requirements, see technical drawings on https://www.maax.com. When there is a pump position A or B indicated on the technical drawing, please specify position when ordering.
5	For details on blower position and requirements, see technical drawings on https://www.maax.com. When there is a blower position A or B indicated on the technical drawing, please specify position when ordering.
12	In combined systems, only the pump is replaced with the Rest. The blower remains the same.
17	Includes Backmax and Footmax jets. Souvenir with apron and Living bathtub models do not include Footmax jets.
21	Specify when ordering if an integrated tiling flange is required and on which side (L/R, Left or Right).

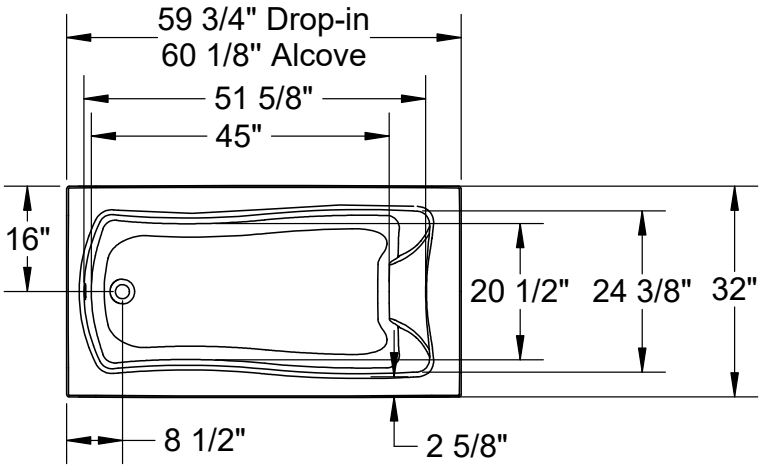

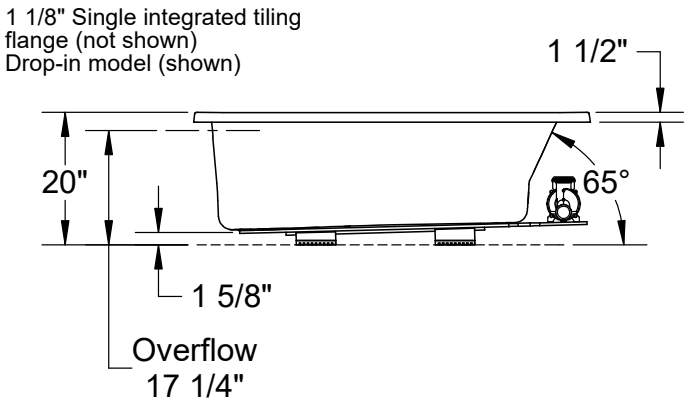

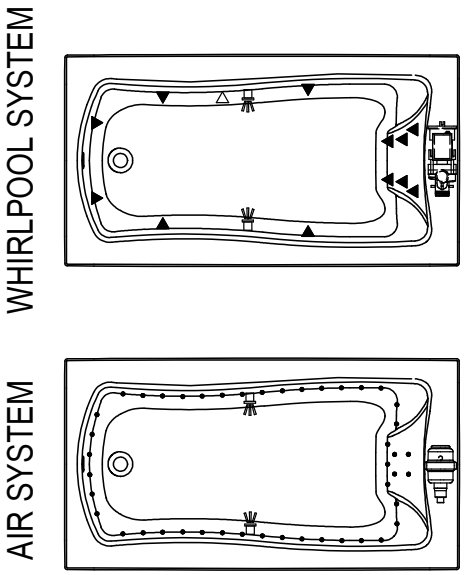

Technical drawing is universal for all 6032 configurations.

Single Integrated tiling flange: 1 1/8" height x 1/4" thickness (not shown)

All dimensions are approximate.
Structure measurement must be verified against the unit to ensure proper fit.

(▲) : Indicates whirlpool jets positioning
(●) : Indicates airjets positioning
(△) : Indicates suction positioning
( ) : Indicates chromatherapy light positioning

Release 6036

Material : Acrylic

Features

- Spacious bathtub with ergonomic design
- Integrated recessed backrest for comfort
- Ample deck space for faucet installation
- Drop-in installation with end drain
- Integrated tilling flange available [21]

RELEASE 6036 - 105311

SKU	System	Color	Configuration	Dimensions & Weight	Packaging	MSRP
105311-000-001-100	Soaker - No System	White	End Drain	59 5/8” x 36” x 20” / 115 lb	37 ft³	$ 1999
105311-004-001	Hydromax [1 4 17]					$ 6343
105311-055-001-000	Aerofeel [1 5]					$ 6343
105311-094-001	Combined Hydromax & Aerofeel [1 4 5 17]					$ 9815
105311-L-000-001	Soaker - No System		Left Drain			$ 1999
105311-L-004-001	Hydromax [1 4 17]					$ 6343
105311-L-055-001	Aerofeel [1 5]					$ 6343
105311-L-094-001	Combined Hydromax & Aerofeel [1 4 5 17]					$ 9815
105311-R-000-001	Soaker - No System		Right Drain			$ 1999
105311-R-004-001	Hydromax [1 4 17]					$ 6343
105311-R-055-001	Aerofeel [1 5]					$ 6343
105311-R-094-001	Combined Hydromax & Aerofeel [1 4 5 17]					$ 9815

COMMON OPTIONS

SKU	Description	MSRP
OPT10054	Two chromatherapy lights for bathtubs without waterfall (factory installed)	$ 1010
OPT10095	Water heater assembly for whirlpool and combined systems (factory installed)	$ 1033
OPT20139	Ozonator for whirlpool system (factory installed)	$ 670
OPT10106-084	Metal trim kit for whirlpool and combined systems (factory installed) Available colors: Chrome **(084)** and Brushed Nickel **(105)**	$ 728
OPT10106-105		$ 728
OPT10119-105	Metal trim kit for Aerofeel electronic control (factory installed) Available colors: Chrome **(084)** and Brushed Nickel **(105)**	$ 107
OPT10119-084		$ 107
OPT20141	Rest for Hydromax and combined systems [12]	$ 1173

ACCESSORIES

SKU	Description	MSRP
10033272	Flexible main hose for electronic control air massage - kit (sold separately) 15 ft. extension	$ 407
10025081-084	Waste and overflow 27 in. flexible neck (sold separately) Available colors: Chrome **(084)** and Brushed Nickel **(105)**	$ 489
10025081-105		$ 489

FOOTNOTES

No	Description
1	Components for standard colour units equipped with systems are colour-coordinated. Trim kit and/or air push with metallic finish can be added (additional charge applies). For non-standard colour units, please specify trim kit and/or air push colour (additional charge applies for metallic finishes). Please note that the positioning of the system’s control could be in conflict with the door if one was installed on the unit. To insure compatibility, please contact customer service.

FOOTNOTES

No	Description
4	For details on pump position and requirements, see technical drawings on https://www.maax.com. When there is a pump position A or B indicated on the technical drawing, please specify position when ordering.
5	For details on blower position and requirements, see technical drawings on https://www.maax.com. When there is a blower position A or B indicated on the technical drawing, please specify position when ordering.
12	In combined systems, only the pump is replaced with the Rest. The blower remains the same.
17	Includes Backmax and Footmax jets. Souvenir with apron and Living bathtub models do not include Footmax jets.
21	Specify when ordering if an integrated tiling flange is required and on which side (L/R, Left or Right).

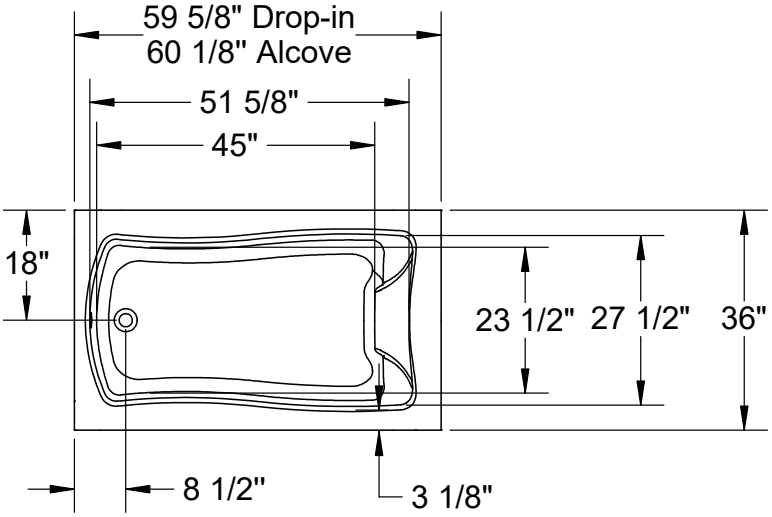

1 1/8" Single integrated tiling flange (not shown)
Drop-in model (shown)

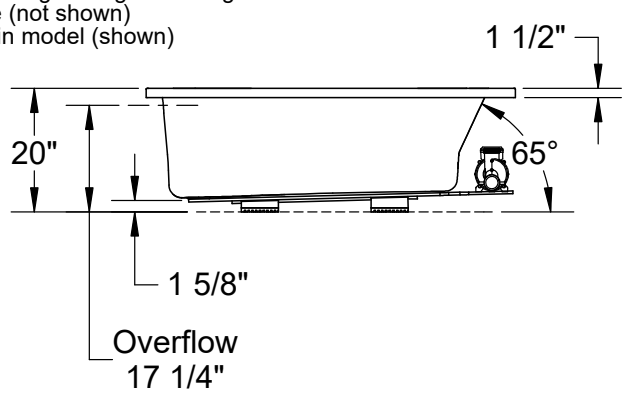

WHIRLPOOL SYSTEM

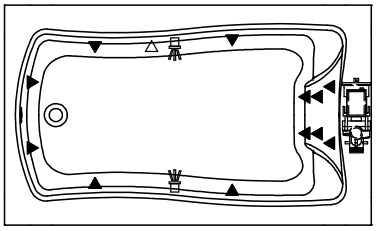

AIR SYSTEM

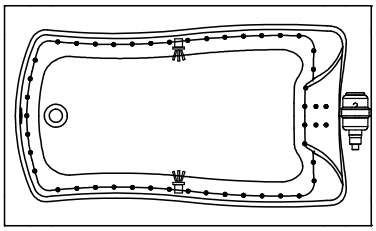

Technical drawing is universal for all 6036 configurations.

Single Integrated tiling flange: 1 1/8" height x 1/4" thickness (not shown)

All dimensions are approximate.
Structure measurement must be verified against the unit to ensure proper fit.

(▲) : Indicates whirlpool jets positioning
(●) : Indicates airjets positioning
(△) : Indicates suction positioning
( ) : Indicates chromatherapy light positioning

Exhibit 6030 IFS

Material : Acrylic

Features

- Rectangular shape bathtub in alcove installation
- Above-the-Floor Rough (AFR) or not
- Minimalist look with discreet armrests and textured floor
- Deck for faucet available
- When equipped with a system, the unit comes with an access panel
- Available with an optional pre-installed white linear overflow for non-high rise construction

EXHIBIT 6030 IFS AFR - 105511

SKU	System	Color	Configuration	Dimensions & Weight	Packaging	MSRP
105511-000-001-001	Soaker - No System	White	Left Drain	59 3/4” x 30” x 19 1/2” / 77 lb	23 ft^3	$ 1229
105511-000-001-002			Right Drain			$ 1229
105511-001-001-001	Whirlpool [1 4]		Left Drain			$ 3016
105511-001-001-002			Right Drain			$ 3016
105511-096-001-001	Combined Whirlpool & Aeroeffect [1 3]		Left Drain			$ 5541
105511-096-001-002			Right Drain			$ 5541
105511-103-001-100	Aeroeffect [1 2 5]		Left Drain			$ 4242
105511-103-001-101			Right Drain			$ 4242

EXHIBIT 6030 IFS - 105519

SKU	System	Color	Configuration	Dimensions & Weight	Packaging	MSRP
105519-000-001-102	Soaker - No System	White	Left Drain	59 3/4” x 30” x 17 3/4” / 77 lb	23 ft^3	$ 1229
105519-000-001-103			Right Drain			$ 1229
105519-001-001-100	Whirlpool [1 4]		Left Drain			$ 3016
105519-001-001-101			Right Drain			$ 3016
105519-096-001-100	Combined Whirlpool & Aeroeffect [1 3]		Left Drain			$ 5541
105519-096-001-101			Right Drain			$ 5541
105519-103-001-104	Aeroeffect [1 2 5]		Left Drain			$ 4242
105519-103-001-105			Right Drain			$ 4242

COMMON OPTIONS

SKU	Description	MSRP
OPT20029-105	Metal trim kit for air push control (factory installed) Available colors: Chrome **(084)** and Brushed Nickel **(105)**	$ 82
OPT20029-084		$ 82
OPT20137-004	Cable-operated waste and overflow (16 in. to 22 in.) (included in product packaging when purchased) Available colors: White **(001)**, Bone **(004)**, Chrome **(084)** and Brushed Nickel **(105)**	$ 362
OPT20137-084		$ 362
OPT20137-105		$ 362
OPT20137-001		$ 362
OPT10019	Removable access panel	$ 419
OPT10053	One chromatherapy light (factory installed) [54]	$ 790
OPT10095	Water heater assembly for whirlpool and combined systems (factory installed)	$ 1033
OPT10106-084	Metal trim kit for whirlpool and combined systems (factory installed) Available colors: Chrome **(084)** and Brushed Nickel **(105)**	$ 728
OPT10106-105		$ 728

ACCESSORIES

SKU	Description	MSRP
10006923	Flexible main hose (9 ft. extension) for air push control air massage - Kit (sold separately)	$ 209
10004306-001	White foam cushion with 2 suction pads (sold separately) Available color: White **(001)**	$ 138
10028641-084	Metal trim kit for Whirlpool and combined systems (sold separately) Available colors: Chrome **(084)** and Brushed Nickel **(105)**	$ 728
10028641-105		$ 728
10034250-084	Metal trim kit for Aeroeffect with Air Push Control (sold separately) Available colors: Chrome **(084)** and Brushed Nickel **(105)**	$ 82
10034250-105		$ 82
10022491-004	Cable-operated waste and overflow (16 in. to 22 in.) (sold separately) Available colors: White **(001)**, Bone **(004)**, Chrome **(084)** and Brushed Nickel **(105)**	$ 362

FOOTNOTES

No	Description
1	Components for standard colour units equipped with systems are colour-coordinated. Trim kit and/or air push with metallic finish can be added (additional charge applies). For non-standard colour units, please specify trim kit and/or air push colour (additional charge applies for metallic finishes). Please note that the positioning of the system's control could be in conflict with the door if one was installed on the unit. To insure compatibility, please contact customer service.
2	Please order flexible main hose 10006923 for installation of the blower further than 3 ft from the bathtub. For the Tandem models and the Serenade models (freestanding and drop-in), the blower is always remote and not factory installed so a 9 ft flexible main hose is included. Please note that the positioning of the system's control could be in conflict with the door if one was installed on the unit. To insure compatibility, please contact customer service.
3	The blower is not factory installed (remote). 9 ft flexible main hose included. Please note that the positioning of the system's control could be in conflict with the door if one was installed on the unit. To insure compatibility, please contact customer service.
4	For details on pump position and requirements, see technical drawings on https://www.maax.com. When there is a pump position A or B indicated on the technical drawing, please specify position when ordering.
5	For details on blower position and requirements, see technical drawings on https://www.maax.com. When there is a blower position A or B indicated on the technical drawing, please specify position when ordering.
54	A selection of units come with an access panel by default when equipped with a system. However, if the unit is only equipped with chromatherapy, the access panel will not be provided by default.

RECOMMENDED DOORS - VISIT OUR WEBSITE FOR A COMPLETE LIST OF RECOMMENDED DOORS

SKU	Product Name	Pag.
139398	Halo 56 ½-59 x 59 - 8mm	990
139351	Incognito 57 56-59 x 56 3/4 in. 6mm Tub Door	1007
139354	Incognito 57 56-59 x 56 3/4 in. 8mm Tub Door	1011
135330	Incognito 57 Shaker 56-59 x 56 3/4 in. 8mm Tub Door	1005
135695	Revelation Square 56-59 x 56 ¾-59 ¼ - 8mm	1022
135692	Revelation Square 56-59 x 56 ¾-58 ¼ - 6mm	1020
136692	Revelation Round 56-59 x 56 3/4-59 1/4	1017
136695	Revelation Round 56-59 x 56 ¾-59 ¼ - 8 mm	1018
135320	Uptown 56-59 x 58 in. 8 mm	1024
136270	Duel 56-59 x 55 1/2-59	1003
138760	Inverto 56-59 x 55 ½-59 - 8mm	1013
138485	Vela 56 ½-59 x 59 - 8mm	988
138480		986
134661	Kameleon SC 55-59 x 57 - 6mm	995
134573	Kameleon 55-59 x 57 - 8mm	997
134670	Kameleon SC 55-59 x 57 - 8mm	991
134561	Kameleon 55-59 x 57 - 6mm	999
105410	Polar 54-59 1/2 x 57 1/2 in.	1017
105409	Mika 54 - 59 ½ x 55 in.	1015

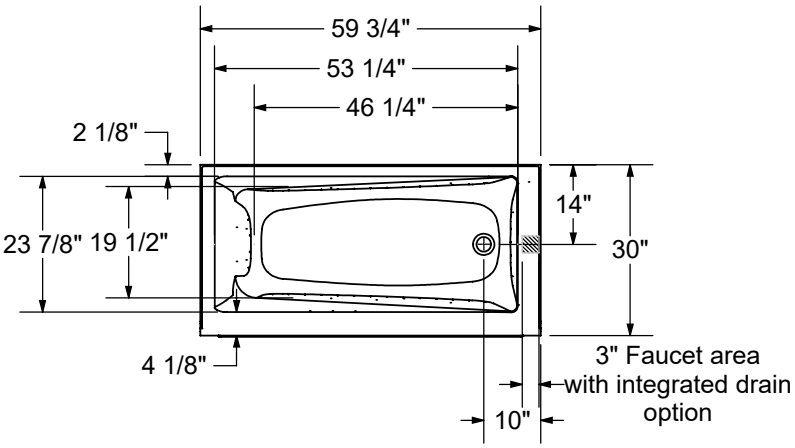

1" Single Integrated tiling flange (shown)

(access panel)
Single tiling flange

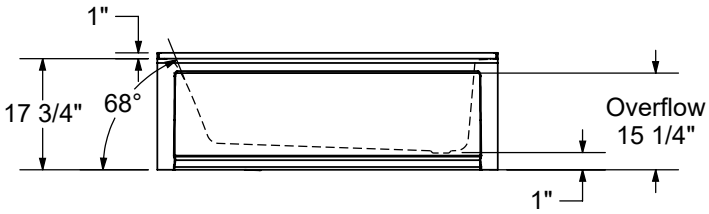

WHIRLPOOL SYSTEM

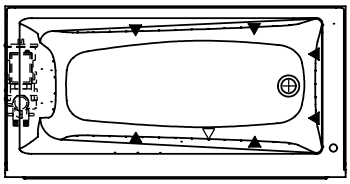

AIR SYSTEM

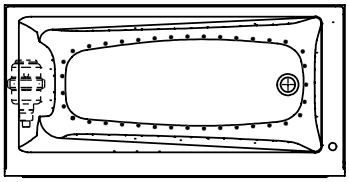

(▲) : Indicates whirlpool jets positioning
(△) : Indicates suction positioning
(●) : Indicates airjets positioning

Available with round or linear overflow configurations

Wood support design may vary.
Single Integrated tiling flange: 1" height x 1/4" thickness (shown)

All dimensions are approximate. Structure measurements must be verified against the unit to ensure proper fit.

Exhibit 6030 IFS DTF

Material : Acrylic

Features

- Unique feature: minimalist look with discreet armrests and textured bottom
- Above-the-Floor Rough (AFR) (3 in.) included
- Alcove installation
- Double tiling flange
- Available with an optional pre-installed white linear overflow for non-high rise construction

EXHIBIT 6030 IFS AFR DTF - 105546

SKU	System	Color	Configuration	Dimensions & Weight	Packaging	MSRP
105546-000-001-104	Soaker - No System	White	Left Drain	59 3/4” x 30” x 19 1/2” / 77 lb	23 ft³	$ 1229
105546-000-001-106			Right Drain			$ 1229

EXHIBIT 6030 IFS DTF - 105547

SKU	System	Color	Configuration	Dimensions & Weight	Packaging	MSRP
105547-000-001-105	Soaker - No System	White	Left Drain	59 3/4” x 30” x 17 3/4” / 77 lb	23 ft³	$ 1229
105547-000-001-107			Right Drain			$ 1229

COMMON OPTIONS

SKU	Description	MSRP
OPT20137-004	Cable-operated waste and overflow (16 in. to 22 in.) (included in product packaging when purchased) Available colors: White **(001)**, Bone **(004)**, Chrome **(084)** and Brushed Nickel **(105)**	$ 362
OPT20137-084		$ 362
OPT20137-105		$ 362
OPT20137-001		$ 362

ACCESSORIES

SKU	Description	MSRP
10004306-001	White foam cushion with 2 suction pads (sold separately) Available color: White **(001)**	$ 138
10022491-004	Cable-operated waste and overflow (16 in. to 22 in.) (sold separately) Available colors: White **(001)**, Bone **(004)**, Chrome **(084)** and Brushed Nickel **(105)**	$ 362

RECOMMENDED DOORS - VISIT OUR WEBSITE FOR A COMPLETE LIST OF RECOMMENDED DOORS

SKU	Product Name	Pag.
139398	Halo 56 ½-59 x 59 - 8mm	990
139351	Incognito 57 56-59 x 56 3/4 in. 6mm Tub Door	1007
139354	Incognito 57 56-59 x 56 3/4 in. 8mm Tub Door	1011
135330	Incognito 57 Shaker 56-59 x 56 3/4 in. 8mm Tub Door	1005
135695	Revelation Square 56-59 x 56 ¾-59 ¼ - 8mm	1022
135692	Revelation Square 56-59 x 56 ¾-58 ¼ - 6mm	1020
136692	Revelation Round 56-59 x 56 3/4-59 1/4	1017
136695	Revelation Round 56-59 x 56 ¾-59 ¼ - 8 mm	1018
135320	Uptown 56-59 x 58 in. 8 mm	1024
136270	Duel 56-59 x 55 1/2-59	1003
138760	Inverto 56-59 x 55 ½-59 - 8mm	1013
138485	Vela 56 ½-59 x 59 - 8mm	988

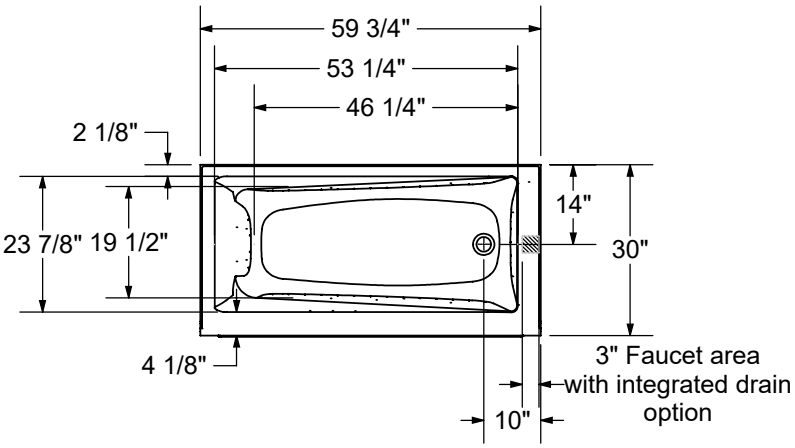

(access panel)
Single tiling flange

1" Single Integrated tiling flange (shown)
2 3/8" Double Integrated tiling flange (not shown)

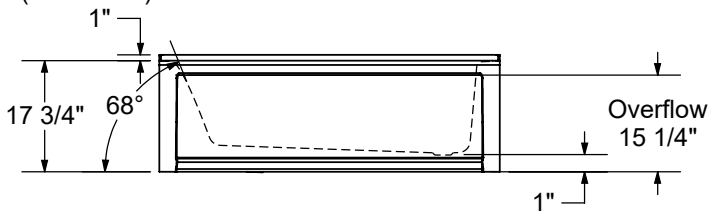

WHIRLPOOL SYSTEM

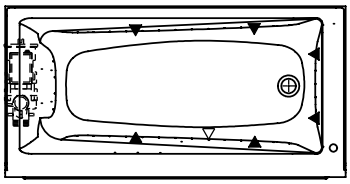

AIR SYSTEM

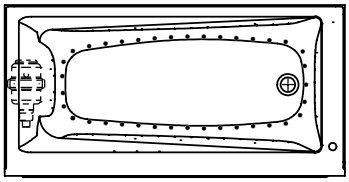

(▲) : Indicates whirlpool jets positioning
(△) : Indicates suction positioning
(●) : Indicates airjets positioning

Available with round or linear overflow configurations

Wood support design may vary.
Single Integrated tiling flange: 1" height x 1/4" thickness (shown)

All dimensions are approximate. Structure measurements must be verified against the unit to ensure proper fit.

Exhibit 6032 IF

Material : Acrylic

Features

- Rectangular shape bathtub
- Drop-in or alcove installation with tiling flange
- Minimalist look with discreet armrests and textured floor
- End drain

EXHIBIT 6032 - 105513

SKU	System	Color	Configuration	Dimensions & Weight	Packaging	MSRP
105513-000-001-000	Soaker - No System	White	End Drain	59 3/4” x 31 7/8” x 20” / 85 lb	30 ft³	$ 1056
105513-001-001-000	Whirlpool [1 4]					$ 2843
105513-002-001-000	Multi-Pack [9]					$ 4755
105513-096-001-000	Combined Whirlpool & Aeroeffect [1 3]					$ 5368
105513-103-001-100	Aeroeffect [1 2 5]					$ 4069

EXHIBIT 6032 IF - 105514

SKU	System	Color	Configuration	Dimensions & Weight	Packaging	MSRP
105514-000-001-001	Soaker - No System	White	Left Drain	59 3/4” x 31 7/8” x 20” / 75 lb	30 ft³	$ 1056
105514-000-001-002			Right Drain			$ 1056
105514-001-001-001	Whirlpool [1 4]		Left Drain		27.2 ft³	$ 2843
105514-001-001-002			Right Drain			$ 2843
105514-002-001-001	Multi-Pack [9]		Left Drain			$ 4755
105514-002-001-002			Right Drain			$ 4755
105514-096-001-001	Combined Whirlpool & Aeroeffect [1 3]		Left Drain			$ 5368
105514-096-001-002			Right Drain			$ 5368
105514-103-001-102	Aeroeffect [1 2 5]		Left Drain			$ 4069
105514-103-001-103			Right Drain			$ 4069

COMMON OPTIONS

SKU	Description	MSRP
OPT20137-004	Cable-operated waste and overflow (16 in. to 22 in.) (included in product packaging when purchased) Available colors: White **(001)**, Bone **(004)**, Chrome **(084)** and Brushed Nickel **(105)**	$ 362
OPT20137-084		$ 362
OPT20137-105		$ 362
OPT20137-001		$ 362
OPT10053	One chromatherapy light (factory installed) [54]	$ 790
OPT10095	Water heater assembly for whirlpool and combined systems (factory installed)	$ 1033
OPT10106-084	Metal trim kit for whirlpool and combined systems (factory installed) Available colors: Chrome **(084)** and Brushed Nickel **(105)**	$ 728
OPT10106-105		$ 728
OPT20029-105	Metal trim kit for air push control (factory installed) Available colors: Chrome **(084)** and Brushed Nickel **(105)**	$ 82
OPT20029-084		$ 82

ACCESSORIES

SKU	Description	MSRP
10006923	Flexible main hose (9 ft. extension) for air push control air massage - Kit (sold separately)	$ 209

ACCESSORIES

SKU	Description	MSRP
10004306-001	White foam cushion with 2 suction pads (sold separately) Available color: White **(001)**	$ 138
10028641-084	Metal trim kit for Whirlpool and combined systems (sold separately) Available colors: Chrome **(084)** and Brushed Nickel **(105)**	$ 728
10028641-105		$ 728
10034250-084	Metal trim kit for Aeroeffect with Air Push Control (sold separately) Available colors: Chrome **(084)** and Brushed Nickel **(105)**	$ 82
10034250-105		$ 82
10022491-004	Cable-operated waste and overflow (16 in. to 22 in.) (sold separately) Available colors: White **(001)**, Bone **(004)**, Chrome **(084)** and Brushed Nickel **(105)**	$ 362

FOOTNOTES

No	Description
1	Components for standard colour units equipped with systems are colour-coordinated. Trim kit and/or air push with metallic finish can be added (additional charge applies). For non-standard colour units, please specify trim kit and/or air push colour (additional charge applies for metallic finishes). Please note that the positioning of the system's control could be in conflict with the door if one was installed on the unit. To insure compatibility, please contact customer service.
2	Please order flexible main hose 10006923 for installation of the blower further than 3 ft from the bathtub. For the Tandem models and the Serenade models (freestanding and drop-in), the blower is always remote and not factory installed so a 9 ft flexible main hose is included. Please note that the positioning of the system's control could be in conflict with the door if one was installed on the unit. To insure compatibility, please contact customer service.
3	The blower is not factory installed (remote). 9 ft flexible main hose included. Please note that the positioning of the system's control could be in conflict with the door if one was installed on the unit. To insure compatibility, please contact customer service.
4	For details on pump position and requirements, see technical drawings on https://www.maax.com. When there is a pump position A or B indicated on the technical drawing, please specify position when ordering.
5	For details on blower position and requirements, see technical drawings on https://www.maax.com. When there is a blower position A or B indicated on the technical drawing, please specify position when ordering.
54	A selection of units come with an access panel by default when equipped with a system. However, if the unit is only equipped with chromatherapy, the access panel will not be provided by default.

RECOMMENDED DOORS - VISIT OUR WEBSITE FOR A COMPLETE LIST OF RECOMMENDED DOORS

SKU	Product Name	Pag.
139398	Halo 56 ½-59 x 59 - 8mm	990
139351	Incognito 57 56-59 x 56 3/4 in. 6mm Tub Door	1007
139354	Incognito 57 56-59 x 56 3/4 in. 8mm Tub Door	1011
135330	Incognito 57 Shaker 56-59 x 56 3/4 in. 8mm Tub Door	1005
135695	Revelation Square 56-59 x 56 ¾-59 ¼ - 8mm	1022
135692	Revelation Square 56-59 x 56 ¾-58 ¼ - 6mm	1020
136692	Revelation Round 56-59 x 56 3/4-59 1/4	1017
136695	Revelation Round 56-59 x 56 ¾-59 ¼ - 8 mm	1018
135320	Uptown 56-59 x 58 in. 8 mm	1024
136270	Duel 56-59 x 55 1/2-59	1003
138760	Inverto 56-59 x 55 ½-59 - 8mm	1013
138485	Vela 56 ½-59 x 59 - 8mm	988
138480		986
134661	Kameleon SC 55-59 x 57 - 6mm	995
134573	Kameleon 55-59 x 57 - 8mm	997
134670	Kameleon SC 55-59 x 57 - 8mm	991
134561	Kameleon 55-59 x 57 - 6mm	999
105410	Polar 54-59 1/2 x 57 1/2 in.	1017
105409	Mika 54 - 59 ½ x 55 in.	1015

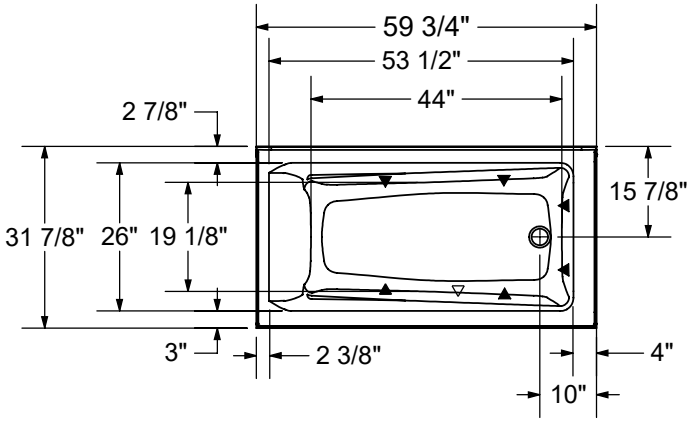

Drop-in model (Shown)
1" Single Integrated tiling flange (not shown)
2" Double Integrated tiling flange (not shown)

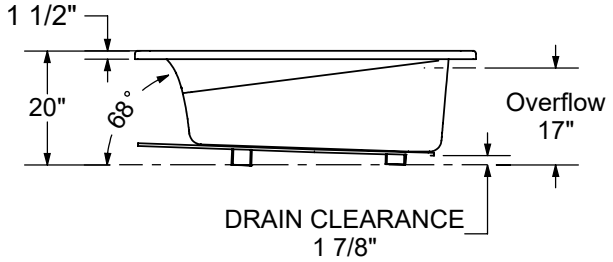

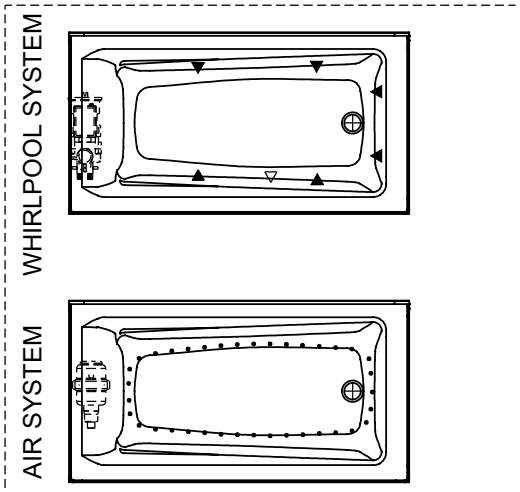

(▲) : Indicates whirlpool jets positioning
(△) : Indicates suction positioning
(●) : Indicates airjets positioning

Wood support design may vary.
Single Integrated tiling flange: 1" height x 1/4" thickness (shown)
Double Integrated tiling flange: 2" height (not shown)

All dimensions are approximate.
Structure measurement must be verified against the unit to ensure proper fit.

Exhibit 6032 IF DTF

Material : Acrylic

Features

- Unique feature: minimalist look with discreet armrests
- Textured bottom
- Alcove installation
- Integrated double tiling flange

EXHIBIT 6032 IF DTF - 105550

SKU	System	Color	Configuration	Dimensions & Weight	Packaging	MSRP
105550-000-001-103	Soaker - No System	White	Left Drain	59 3/4” x 31 7/8” x 20” / 85 lb	30 ft³	$ 1056
105550-L-001-001	Whirlpool [1 4]					$ 2843
105550-L-096-001	Combined Whirlpool & Aeroeffect [1 3]					$ 5368
105550-L-103-001	Aeroeffect [1 2 5]					$ 4069
105550-R-000-001	Soaker - No System		Right Drain			$ 1056
105550-R-001-001	Whirlpool [1 4]					$ 2843
105550-R-096-001	Combined Whirlpool & Aeroeffect [1 3]					$ 5368
105550-R-103-001	Aeroeffect [1 2 5]					$ 4069

COMMON OPTIONS

SKU	Description	MSRP
OPT20029-105	Metal trim kit for air push control (factory installed) Available colors: Chrome **(084)** and Brushed Nickel **(105)**	$ 82
OPT20029-084		$ 82
OPT20137-004	Cable-operated waste and overflow (16 in. to 22 in.) (included in product packaging when purchased) Available colors: White **(001)**, Bone **(004)**, Chrome **(084)** and Brushed Nickel **(105)**	$ 362
OPT20137-084		$ 362
OPT20137-105		$ 362
OPT20137-001		$ 362
OPT10053	One chromatherapy light (factory installed) [54]	$ 790
OPT10095	Water heater assembly for whirlpool and combined systems (factory installed)	$ 1033
OPT10106-084	Metal trim kit for whirlpool and combined systems (factory installed) Available colors: Chrome **(084)** and Brushed Nickel **(105)**	$ 728
OPT10106-105		$ 728

ACCESSORIES

SKU	Description	MSRP
10006923	Flexible main hose (9 ft. extension) for air push control air massage - Kit (sold separately)	$ 209
10004306-001	White foam cushion with 2 suction pads (sold separately) Available color: White **(001)**	$ 138
10028641-084	Metal trim kit for Whirlpool and combined systems (sold separately) Available colors: Chrome **(084)** and Brushed Nickel **(105)**	$ 728
10028641-105		$ 728
10034250-084	Metal trim kit for Aeroeffect with Air Push Control (sold separately) Available colors: Chrome **(084)** and Brushed Nickel **(105)**	$ 82
10034250-105		$ 82
10022491-004	Cable-operated waste and overflow (16 in. to 22 in.) (sold separately) Available colors: White **(001)**, Bone **(004)**, Chrome **(084)** and Brushed Nickel **(105)**	$ 362

FOOTNOTES

No	Description
1	Components for standard colour units equipped with systems are colour-coordinated. Trim kit and/or air push with metallic finish can be added (additional charge applies). For non-standard colour units, please specify trim kit and/or air push colour (additional charge applies for metallic finishes). Please note that the positioning of the system's control could be in conflict with the door if one was installed on the unit. To insure compatibility, please contact customer service.
2	Please order flexible main hose 10006923 for installation of the blower further than 3 ft from the bathtub. For the Tandem models and the Serenade models (freestanding and drop-in), the blower is always remote and not factory installed so a 9 ft flexible main hose is included. Please note that the positioning of the system's control could be in conflict with the door if one was installed on the unit. To insure compatibility, please contact customer service.
3	The blower is not factory installed (remote). 9 ft flexible main hose included. Please note that the positioning of the system's control could be in conflict with the door if one was installed on the unit. To insure compatibility, please contact customer service.
4	For details on pump position and requirements, see technical drawings on https://www.maax.com. When there is a pump position A or B indicated on the technical drawing, please specify position when ordering.
5	For details on blower position and requirements, see technical drawings on https://www.maax.com. When there is a blower position A or B indicated on the technical drawing, please specify position when ordering.
54	A selection of units come with an access panel by default when equipped with a system. However, if the unit is only equipped with chromatherapy, the access panel will not be provided by default.

RECOMMENDED DOORS - VISIT OUR WEBSITE FOR A COMPLETE LIST OF RECOMMENDED DOORS

SKU	Product Name	Pag.
139398	Halo 56 ½-59 x 59 - 8mm	990
139351	Incognito 57 56-59 x 56 3/4 in. 6mm Tub Door	1007
139354	Incognito 57 56-59 x 56 3/4 in. 8mm Tub Door	1011
135330	Incognito 57 Shaker 56-59 x 56 3/4 in. 8mm Tub Door	1005
135695	Revelation Square 56-59 x 56 ¾-59 ¼ - 8mm	1022
135692	Revelation Square 56-59 x 56 ¾-58 ¼ - 6mm	1020
136692	Revelation Round 56-59 x 56 3/4-59 1/4	1017
136695	Revelation Round 56-59 x 56 ¾-59 ¼ - 8 mm	1018
135320	Uptown 56-59 x 58 in. 8 mm	1024
136270	Duel 56-59 x 55 1/2-59	1003
138760	Inverto 56-59 x 55 ½-59 - 8mm	1013
138485	Vela 56 ½-59 x 59 - 8mm	988
138480		986
134661	Kameleon SC 55-59 x 57 - 6mm	995
134573	Kameleon 55-59 x 57 - 8mm	997
134670	Kameleon SC 55-59 x 57 - 8mm	991
134561	Kameleon 55-59 x 57 - 6mm	999
105410	Polar 54-59 1/2 x 57 1/2 in.	1017
105409	Mika 54 - 59 ½ x 55 in.	1015

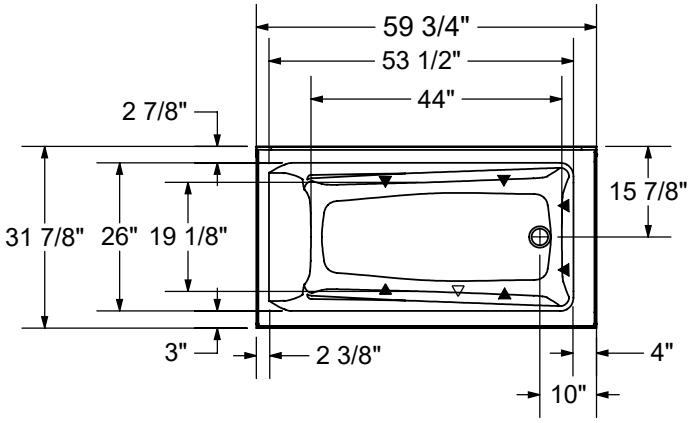

Drop-in model (Shown)
1" Single Integrated tiling flange (not shown)
2" Double Integrated tiling flange (not shown)

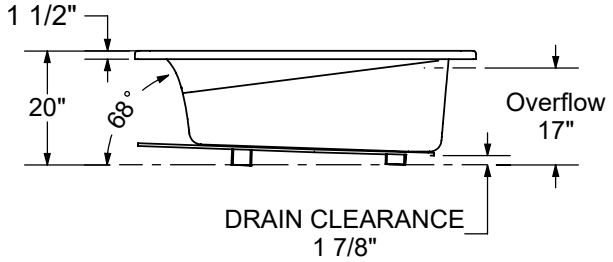

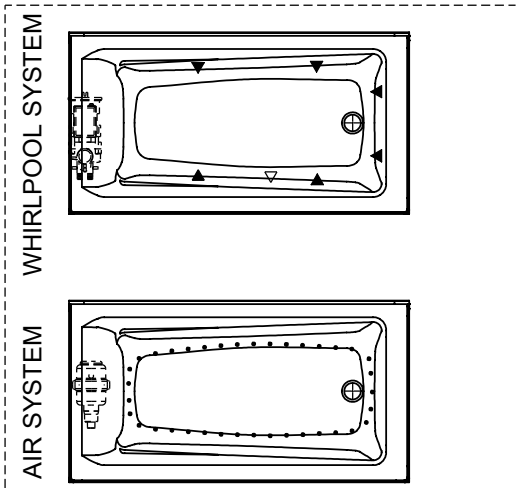

(▲) : Indicates whirlpool jets positioning
(△) : Indicates suction positioning
(●) : Indicates airjets positioning

Wood support design may vary.
Single Integrated tiling flange: 1" height x 1/4" thickness (shown)
Double Integrated tiling flange: 2" height (not shown)

All dimensions are approximate.
Structure measurement must be verified against the unit to ensure proper fit.

Exhibit 6032 IFS

Material : Acrylic

Features

- Alcove bathtub
- Acrylic surface resistant to stains
- Available in left-hand and right-hand drain configurations to fit your specific bathroom layout
- Integrated flat skirt and tiling flange
- Integrated tiling flange for added leak protection and easy installation of shower walls
- Proudly made in North America
- Compatible with UTile for an easy wall solution
- Product warranty: 25 years

EXHIBIT 6032 IFS AFR - 105512

SKU	System	Color	Configuration	Dimensions & Weight	Packaging	MSRP
105512-000-001-001	Soaker - No System	White	Left Drain	59 3/4” x 32” x 19 1/2” / 68 lb	27.2 ft^3	$ 1270
105512-000-001-002			Right Drain			$ 1270
105512-001-001-001	Whirlpool [1 4]		Left Drain			$ 3057
105512-001-001-002			Right Drain			$ 3057
105512-096-001-001	Combined Whirlpool & Aeroeffect [1 3]		Left Drain			$ 5582
105512-096-001-002			Right Drain			$ 5582
105512-103-001-100	Aeroeffect [1 2 5]		Left Drain			$ 4283
105512-103-001-101			Right Drain			$ 4283

EXHIBIT 6032 IFS - 105520

SKU	System	Color	Configuration	Dimensions & Weight	Packaging	MSRP
105520-000-001-102	Soaker - No System	White	Left Drain	59 3/4” x 32” x 17 3/4” / 78 lb	24 ft^3	$ 1270
105520-000-001-103			Right Drain			$ 1270
105520-001-001-100	Whirlpool [1 4]		Left Drain			$ 3057
105520-001-001-101			Right Drain			$ 3057
105520-096-001-100	Combined Whirlpool & Aeroeffect [1 3]		Left Drain			$ 5582
105520-096-001-101			Right Drain			$ 5582
105520-103-001-104	Aeroeffect [1 2 5]		Left Drain			$ 4283
105520-103-001-105			Right Drain			$ 4283

COMMON OPTIONS

SKU	Description	MSRP
OPT20029-105	Metal trim kit for air push control (factory installed) Available colors: Chrome **(084)** and Brushed Nickel **(105)**	$ 82
OPT20029-084		$ 82
OPT20137-004	Cable-operated waste and overflow (16 in. to 22 in.) (included in product packaging when purchased) Available colors: White **(001)**, Bone **(004)**, Chrome **(084)** and Brushed Nickel **(105)**	$ 362
OPT20137-084		$ 362
OPT20137-105		$ 362
OPT20137-001		$ 362
OPT10019	Removable access panel	$ 419
OPT10053	One chromatherapy light (factory installed) [54]	$ 790
OPT10095	Water heater assembly for whirlpool and combined systems (factory installed)	$ 1033
OPT10106-084	Metal trim kit for whirlpool and combined systems (factory installed) Available colors: Chrome **(084)** and Brushed Nickel **(105)**	$ 728
OPT10106-105		$ 728

ACCESSORIES

SKU	Description	MSRP
10006923	Flexible main hose (9 ft. extension) for air push control air massage - Kit (sold separately)	$ 209
10004306-001	White foam cushion with 2 suction pads (sold separately) Available color: White **(001)**	$ 138
10028641-084	Metal trim kit for Whirlpool and combined systems (sold separately) Available colors: Chrome **(084)** and Brushed Nickel **(105)**	$ 728
10028641-105		$ 728
10034250-084	Metal trim kit for Aeroeffect with Air Push Control (sold separately) Available colors: Chrome **(084)** and Brushed Nickel **(105)**	$ 82
10034250-105		$ 82
10022491-004	Cable-operated waste and overflow (16 in. to 22 in.) (sold separately) Available colors: White **(001)**, Bone **(004)**, Chrome **(084)** and Brushed Nickel **(105)**	$ 362

FOOTNOTES

No	Description
1	Components for standard colour units equipped with systems are colour-coordinated. Trim kit and/or air push with metallic finish can be added (additional charge applies). For non-standard colour units, please specify trim kit and/or air push colour (additional charge applies for metallic finishes). Please note that the positioning of the system's control could be in conflict with the door if one was installed on the unit. To insure compatibility, please contact customer service.
2	Please order flexible main hose 10006923 for installation of the blower further than 3 ft from the bathtub. For the Tandem models and the Serenade models (freestanding and drop-in), the blower is always remote and not factory installed so a 9 ft flexible main hose is included. Please note that the positioning of the system's control could be in conflict with the door if one was installed on the unit. To insure compatibility, please contact customer service.
3	The blower is not factory installed (remote). 9 ft flexible main hose included. Please note that the positioning of the system's control could be in conflict with the door if one was installed on the unit. To insure compatibility, please contact customer service.
4	For details on pump position and requirements, see technical drawings on https://www.maax.com. When there is a pump position A or B indicated on the technical drawing, please specify position when ordering.
5	For details on blower position and requirements, see technical drawings on https://www.maax.com. When there is a blower position A or B indicated on the technical drawing, please specify position when ordering.
54	A selection of units come with an access panel by default when equipped with a system. However, if the unit is only equipped with chromatherapy, the access panel will not be provided by default.

RECOMMENDED DOORS - VISIT OUR WEBSITE FOR A COMPLETE LIST OF RECOMMENDED DOORS

SKU	Product Name	Pag.
139398	Halo 56 ½-59 x 59 - 8mm	990
139351	Incognito 57 56-59 x 56 3/4 in. 6mm Tub Door	1007
139354	Incognito 57 56-59 x 56 3/4 in. 8mm Tub Door	1011
135330	Incognito 57 Shaker 56-59 x 56 3/4 in. 8mm Tub Door	1005
135695	Revelation Square 56-59 x 56 ¾-59 ¼ - 8mm	1022
135692	Revelation Square 56-59 x 56 ¾-58 ¼ - 6mm	1020
136692	Revelation Round 56-59 x 56 3/4-59 1/4	1017
136695	Revelation Round 56-59 x 56 ¾-59 ¼ - 8 mm	1018
135320	Uptown 56-59 x 58 in. 8 mm	1024
136270	Duel 56-59 x 55 1/2-59	1003
138760	Inverto 56-59 x 55 ½-59 - 8mm	1013
138485	Vela 56 ½-59 x 59 - 8mm	988
138480		986
134661	Kameleon SC 55-59 x 57 - 6mm	995
134573	Kameleon 55-59 x 57 - 8mm	997
134670	Kameleon SC 55-59 x 57 - 8mm	991
134561	Kameleon 55-59 x 57 - 6mm	999
105410	Polar 54-59 1/2 x 57 1/2 in.	1017
105409	Mika 54 - 59 ½ x 55 in.	1015

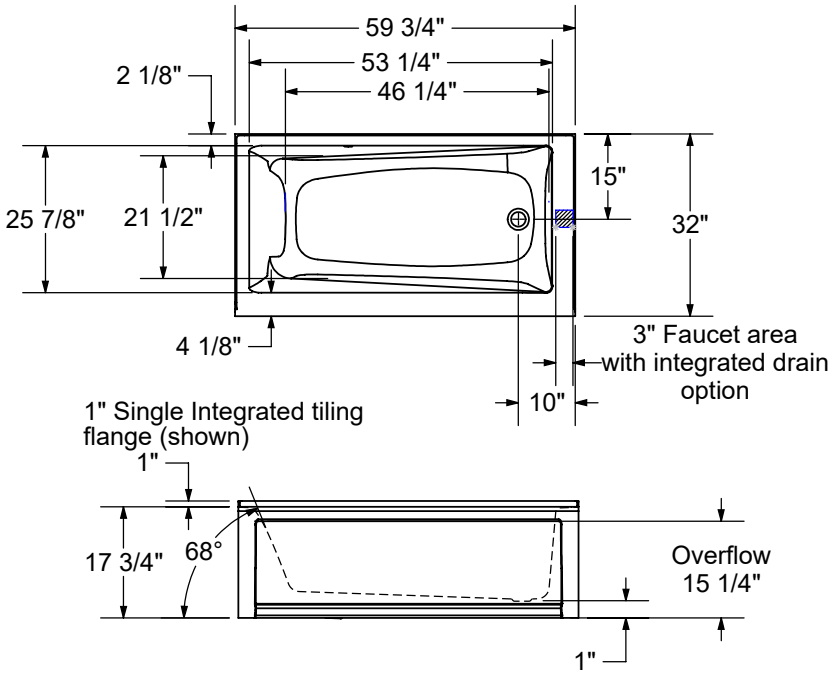

WITH SYSTEM

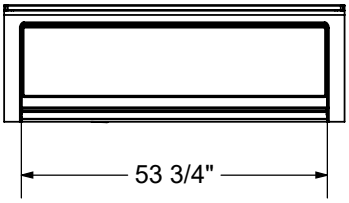

WHIRLPOOL SYSTEM

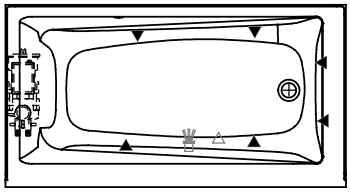

AIR SYSTEM

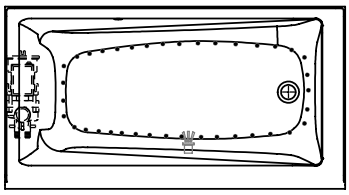

(▲) : Indicates whirlpool jets positioning
(△) : Indicates suction positioning
(●) : Indicates airjets positioning
( ) : Indicates chromatherapy light positioning

Available with round or linear overflow configurations

Wood support design may vary.
Single Integrated tiling flange: 1" height x 1/4" thickness (shown)

All dimensions are approximate.
Structure measurement must be verified against the unit to ensure proper fit.

Exhibit 6032 IFS DTF

Material : Acrylic

Features

- Unique feature: minimalist look with discreet armrests and textured bottom
- Above-the-Floor Rough (AFR) (3 in.) included
- Integrated apron with access panel when equipped with a system
- Alcove installation
- Double tiling flange

EXHIBIT 6032 IFS AFR DTF - 105548

SKU	System	Color	Configuration	Dimensions & Weight	Packaging	MSRP
105548-000-001-104	Soaker - No System	White	Left Drain	59 3/4” x 31 7/8” x 21 7/8” / 78 lb	24 ft³	$ 1270
105548-000-001-106			Right Drain			$ 1270
105548-L-001-001	Whirlpool [1 4]		Left Drain			$ 3057
105548-L-096-001	Combined Whirlpool & Aeroeffect [1 3]					$ 5582
105548-L-103-001	Aeroeffect [1 2 5]					$ 4283
105548-R-001-001	Whirlpool [1 4]		Right Drain			$ 3057
105548-R-096-001	Combined Whirlpool & Aeroeffect [1 3]					$ 5582
105548-R-103-001	Aeroeffect [1 2 5]					$ 4283

EXHIBIT 6032 IFS DTF - 105549

SKU	System	Color	Configuration	Dimensions & Weight	Packaging	MSRP
105549-000-001-105	Soaker - No System	White	Left Drain	59 3/4” x 31 7/8” x 20” / 78 lb	24 ft³	$ 1270
105549-000-001-107			Right Drain			$ 1270
105549-L-001-001	Whirlpool [1 4]		Left Drain			$ 3057
105549-L-096-001	Combined Whirlpool & Aeroeffect [1 3]					$ 5582
105549-L-103-001	Aeroeffect [1 2 5]					$ 4283
105549-R-001-001	Whirlpool [1 4]		Right Drain			$ 3057
105549-R-096-001	Combined Whirlpool & Aeroeffect [1 3]					$ 5582
105549-R-103-001	Aeroeffect [1 2 5]					$ 4283

COMMON OPTIONS

SKU	Description	MSRP
OPT20029-105	Metal trim kit for air push control (factory installed) Available colors: Chrome **(084)** and Brushed Nickel **(105)**	$ 82
OPT20029-084		$ 82
OPT20137-004	Cable-operated waste and overflow (16 in. to 22 in.) (included in product packaging when purchased) Available colors: White **(001)**, Bone **(004)**, Chrome **(084)** and Brushed Nickel **(105)**	$ 362
OPT20137-084		$ 362
OPT20137-105		$ 362
OPT20137-001		$ 362
OPT10019	Removable access panel	$ 419
OPT10053	One chromatherapy light (factory installed) [54]	$ 790
OPT10095	Water heater assembly for whirlpool and combined systems (factory installed)	$ 1033
OPT10106-084	Metal trim kit for whirlpool and combined systems (factory installed) Available colors: Chrome **(084)** and Brushed Nickel **(105)**	$ 728
OPT10106-105		$ 728

ACCESSORIES

SKU	Description	MSRP
10006923	Flexible main hose (9 ft. extension) for air push control air massage - Kit (sold separately)	$ 209
10004306-001	White foam cushion with 2 suction pads (sold separately) Available color: White **(001)**	$ 138
10028641-084	Metal trim kit for Whirlpool and combined systems (sold separately) Available colors: Chrome **(084)** and Brushed Nickel **(105)**	$ 728
10028641-105		$ 728
10034250-084	Metal trim kit for Aeroeffect with Air Push Control (sold separately) Available colors: Chrome **(084)** and Brushed Nickel **(105)**	$ 82
10034250-105		$ 82
10022491-004	Cable-operated waste and overflow (16 in. to 22 in.) (sold separately) Available colors: White **(001)**, Bone **(004)**, Chrome **(084)** and Brushed Nickel **(105)**	$ 362

FOOTNOTES

No	Description
54	A selection of units come with an access panel by default when equipped with a system. However, if the unit is only equipped with chromatherapy, the access panel will not be provided by default.

RECOMMENDED DOORS - VISIT OUR WEBSITE FOR A COMPLETE LIST OF RECOMMENDED DOORS

SKU	Product Name	Pag.
139398	Halo 56 ½-59 x 59 - 8mm	990
139351	Incognito 57 56-59 x 56 3/4 in. 6mm Tub Door	1007
139354	Incognito 57 56-59 x 56 3/4 in. 8mm Tub Door	1011
135330	Incognito 57 Shaker 56-59 x 56 3/4 in. 8mm Tub Door	1005
135695	Revelation Square 56-59 x 56 ¾-59 ¼ - 8mm	1022
135692	Revelation Square 56-59 x 56 ¾-58 ¼ - 6mm	1020
136692	Revelation Round 56-59 x 56 3/4-59 1/4	1017
136695	Revelation Round 56-59 x 56 ¾-59 ¼ - 8 mm	1018
135320	Uptown 56-59 x 58 in. 8 mm	1024
136270	Duel 56-59 x 55 1/2-59	1003
138760	Inverto 56-59 x 55 ½-59 - 8mm	1013
138485	Vela 56 ½-59 x 59 - 8mm	988
138480		986
134661	Kameleon SC 55-59 x 57 - 6mm	995
134573	Kameleon 55-59 x 57 - 8mm	997
134670	Kameleon SC 55-59 x 57 - 8mm	991
134561	Kameleon 55-59 x 57 - 6mm	999
105410	Polar 54-59 1/2 x 57 1/2 in.	1017
105409	Mika 54 - 59 ½ x 55 in.	1015

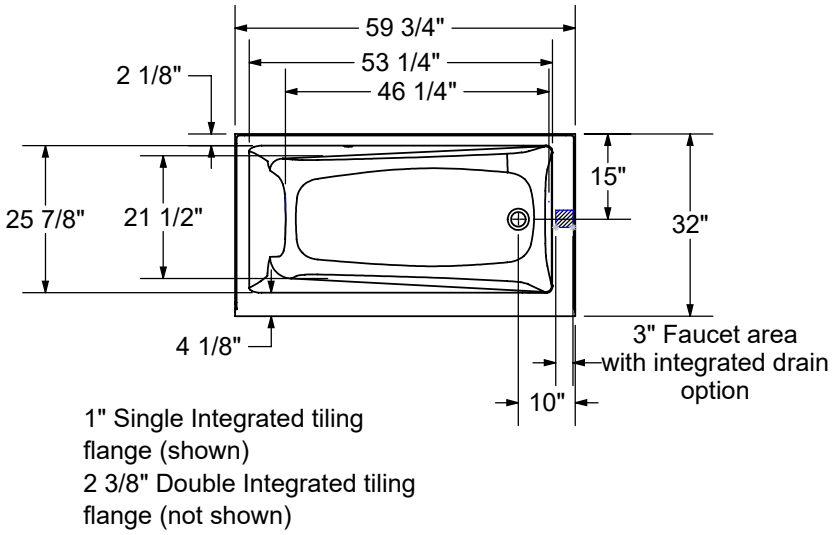

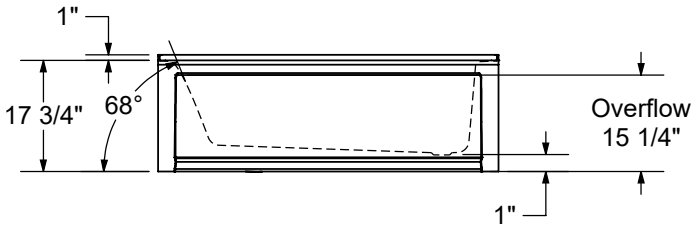

WITH SYSTEM

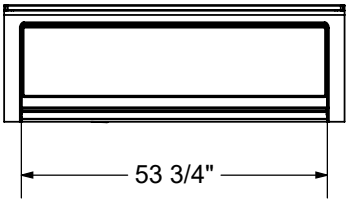

WHIRLPOOL SYSTEM

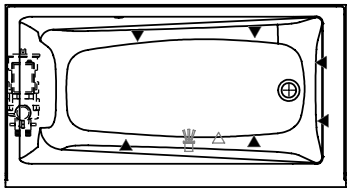

AIR SYSTEM

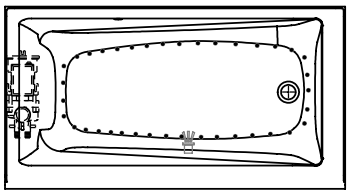

(▲) : Indicates whirlpool jets positioning
(△) : Indicates suction positioning
(●) : Indicates airjets positioning
( ) : Indicates chromatherapy light positioning

Available with round or linear overflow configurations

Wood support design may vary.
Single Integrated tiling flange: 1" height x 1/4" thickness (shown)

All dimensions are approximate.
Structure measurement must be verified against the unit to ensure proper fit.

Exhibit 6036

Material : Acrylic

Features

- Rectangular shape bathtub
- Drop-in or alcove installation with tiling flange
- Minimalist look with discreet armrests and textured floor
- End drain

EXHIBIT 6036 - 106170

SKU	System	Color	Configuration	Dimensions & Weight	Packaging	MSRP
106170-000-001-000	Soaker - No System	White	End Drain	59 7/8” x 36” x 18” / 90 lb	0 ft^3	$ 1370
106170-001-001-000	Whirlpool [1 4]					$ 3157
106170-002-001-100	Multi-Pack [9]					$ 6160
106170-096-001	Combined Whirlpool & Aeroeffect [1 3]					$ 5682
106170-103-001-100	Aeroeffect [1 2 5]					$ 4383

COMMON OPTIONS

SKU	Description	MSRP
OPT20137-004	Cable-operated waste and overflow (16 in. to 22 in.) (included in product packaging when purchased) Available colors: White **(001)**, Bone **(004)**, Chrome **(084)** and Brushed Nickel **(105)**	$ 362
OPT20137-084		$ 362
OPT20137-105		$ 362
OPT20137-001		$ 362
OPT10053	One chromatherapy light (factory installed) [54]	$ 790
OPT10095	Water heater assembly for whirlpool and combined systems (factory installed)	$ 1033
OPT10106-084	Metal trim kit for whirlpool and combined systems (factory installed) Available colors: Chrome **(084)** and Brushed Nickel **(105)**	$ 728
OPT10106-105		$ 728
OPT20029-105	Metal trim kit for air push control (factory installed) Available colors: Chrome **(084)** and Brushed Nickel **(105)**	$ 82
OPT20029-084		$ 82

ACCESSORIES

SKU	Description	MSRP
10006923	Flexible main hose (9 ft. extension) for air push control air massage - Kit (sold separately)	$ 209
10004306-001	White foam cushion with 2 suction pads (sold separately) Available color: White **(001)**	$ 138
10028641-084	Metal trim kit for Whirlpool and combined systems (sold separately) Available colors: Chrome **(084)** and Brushed Nickel **(105)**	$ 728
10028641-105		$ 728
10034250-084	Metal trim kit for Aeroeffect with Air Push Control (sold separately) Available colors: Chrome **(084)** and Brushed Nickel **(105)**	$ 82
10034250-105		$ 82
10022491-004	Cable-operated waste and overflow (16 in. to 22 in.) (sold separately) Available colors: White **(001)**, Bone **(004)**, Chrome **(084)** and Brushed Nickel **(105)**	$ 362

FOOTNOTES

No	Description
1	Components for standard colour units equipped with systems are colour-coordinated. Trim kit and/or air push with metallic finish can be added (additional charge applies). For non-standard colour units, please specify trim kit and/or air push colour (additional charge applies for metallic finishes). Please note that the positioning of the system’s control could be in conflict with the door if one was installed on the unit. To insure compatibility, please contact customer service.

FOOTNOTES

No	Description
2	Please order flexible main hose 10006923 for installation of the blower further than 3 ft from the bathtub. For the Tandem models and the Serenade models (freestanding and drop-in), the blower is always remote and not factory installed so a 9 ft flexible main hose is included. Please note that the positioning of the system's control could be in conflict with the door if one was installed on the unit. To insure compatibility, please contact customer service.
4	For details on pump position and requirements, see technical drawings on https://www.maax.com. When there is a pump position A or B indicated on the technical drawing, please specify position when ordering.
5	For details on blower position and requirements, see technical drawings on https://www.maax.com. When there is a blower position A or B indicated on the technical drawing, please specify position when ordering.
54	A selection of units come with an access panel by default when equipped with a system. However, if the unit is only equipped with chromatherapy, the access panel will not be provided by default.

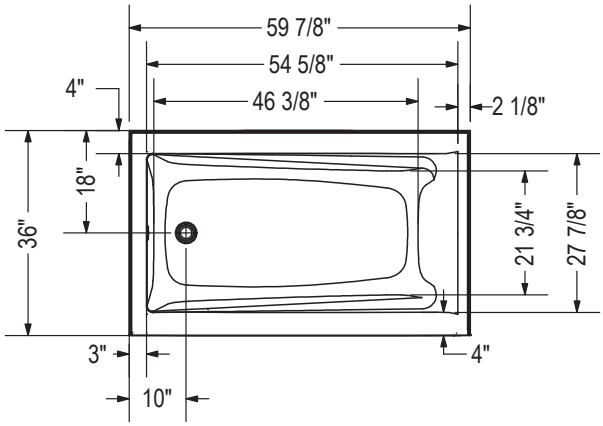

IFS Without System
Single tiling flange

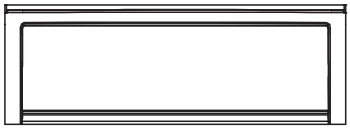

IFS With System
(access panel)
Single tiling flange

1" Single integrated tiling
flange (not shown)
Drop-in model (Shown)

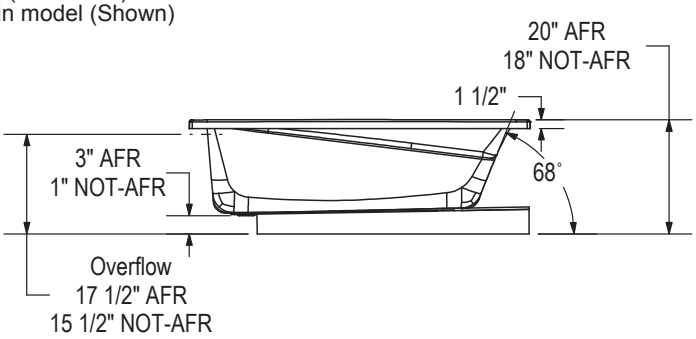

WHIRLPOOL SYSTEM

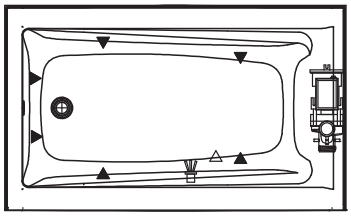

AIR SYTEM

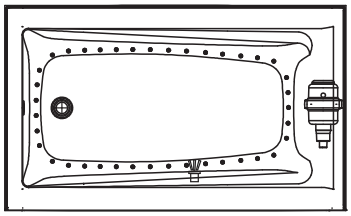

Technical drawing is universal for all Exhibit 6036 configurations.

Wood support design may vary.
Single Integrated tiling flange: 1" height x 1/4'' thickness (not shown)

All dimensions are approximate.
Structure measurement must be verified against the unit to ensure proper fit.

(▲) : Indicates whirlpool jets positioning
(△) : Indicates suction positioning
(●) : Indicates airjets positioning
( ) : Indicates chromatherapy light positioning

Exhibit 6036 IF

Material : Acrylic

Features

- Rectangular shape bathtub
- Drop-in or alcove installation with tiling flange
- Minimalist look with discreet armrests and textured floor
- End drain

EXHIBIT 6036 IF - 106171

SKU	System	Color	Configuration	Dimensions & Weight	Packaging	MSRP
106171-000-001-001	Soaker - No System	White	Left Drain	59 7/8” x 36” x 18” / 72 lb	32 ft³	$ 1370
106171-000-001-002			Right Drain			$ 1370
106171-002-001-101	Multi-Pack [9]		Left Drain			$ 6160
106171-002-001-102			Right Drain			$ 6160
106171-L-001-001	Whirlpool [1 4]		Left Drain			$ 3157
106171-L-096-001	Combined Whirlpool & Aeroeffect [1 3]					$ 5682
106171-L-103-001	Aeroeffect [1 2 5]					$ 4383
106171-R-001-001	Whirlpool [1 4]		Right Drain			$ 3157
106171-R-096-001	Combined Whirlpool & Aeroeffect [1 3]					$ 5682
106171-R-103-001	Aeroeffect [1 2 5]					$ 4383

COMMON OPTIONS

SKU	Description	MSRP
OPT20137-004	Cable-operated waste and overflow (16 in. to 22 in.) (included in product packaging when purchased) Available colors: White **(001)**, Bone **(004)**, Chrome **(084)** and Brushed Nickel **(105)**	$ 362
OPT20137-084		$ 362
OPT20137-105		$ 362
OPT20137-001		$ 362
OPT10053	One chromatherapy light (factory installed) [54]	$ 790
OPT10095	Water heater assembly for whirlpool and combined systems (factory installed)	$ 1033
OPT10106-084	Metal trim kit for whirlpool and combined systems (factory installed) Available colors: Chrome **(084)** and Brushed Nickel **(105)**	$ 728
OPT10106-105		$ 728
OPT20029-105	Metal trim kit for air push control (factory installed) Available colors: Chrome **(084)** and Brushed Nickel **(105)**	$ 82
OPT20029-084		$ 82

ACCESSORIES

SKU	Description	MSRP
10006923	Flexible main hose (9 ft. extension) for air push control air massage - Kit (sold separately)	$ 209
10004306-001	White foam cushion with 2 suction pads (sold separately) Available color: White **(001)**	$ 138
10028641-084	Metal trim kit for Whirlpool and combined systems (sold separately) Available colors: Chrome **(084)** and Brushed Nickel **(105)**	$ 728
10028641-105		$ 728
10034250-084	Metal trim kit for Aeroeffect with Air Push Control (sold separately) Available colors: Chrome **(084)** and Brushed Nickel **(105)**	$ 82
10034250-105		$ 82
10022491-004	Cable-operated waste and overflow (16 in. to 22 in.) (sold separately) Available colors: White **(001)**, Bone **(004)**, Chrome **(084)** and Brushed Nickel **(105)**	$ 362

FOOTNOTES

No	Description
1	Components for standard colour units equipped with systems are colour-coordinated. Trim kit and/or air push with metallic finish can be added (additional charge applies). For non-standard colour units, please specify trim kit and/or air push colour (additional charge applies for metallic finishes). Please note that the positioning of the system's control could be in conflict with the door if one was installed on the unit. To insure compatibility, please contact customer service.
3	The blower is not factory installed (remote). 9 ft flexible main hose included. Please note that the positioning of the system's control could be in conflict with the door if one was installed on the unit. To insure compatibility, please contact customer service.
4	For details on pump position and requirements, see technical drawings on https://www.maax.com. When there is a pump position A or B indicated on the technical drawing, please specify position when ordering.
54	A selection of units come with an access panel by default when equipped with a system. However, if the unit is only equipped with chromatherapy, the access panel will not be provided by default.

RECOMMENDED DOORS - VISIT OUR WEBSITE FOR A COMPLETE LIST OF RECOMMENDED DOORS

SKU	Product Name	Pag.
139398	Halo 56 ½-59 x 59 - 8mm	990
139351	Incognito 57 56-59 x 56 3/4 in. 6mm Tub Door	1007
139354	Incognito 57 56-59 x 56 3/4 in. 8mm Tub Door	1011
135330	Incognito 57 Shaker 56-59 x 56 3/4 in. 8mm Tub Door	1005
135695	Revelation Square 56-59 x 56 ¾-59 ¼ - 8mm	1022
135692	Revelation Square 56-59 x 56 ¾-58 ¼ - 6mm	1020
136692	Revelation Round 56-59 x 56 3/4-59 1/4	1017
136695	Revelation Round 56-59 x 56 ¾-59 ¼ - 8 mm	1018
135320	Uptown 56-59 x 58 in. 8 mm	1024
136270	Duel 56-59 x 55 1/2-59	1003
138760	Inverto 56-59 x 55 ½-59 - 8mm	1013
138485	Vela 56 ½-59 x 59 - 8mm	988
138480		986
134661	Kameleon SC 55-59 x 57 - 6mm	995
134573	Kameleon 55-59 x 57 - 8mm	997
134670	Kameleon SC 55-59 x 57 - 8mm	991
134561	Kameleon 55-59 x 57 - 6mm	999
105410	Polar 54-59 1/2 x 57 1/2 in.	1017
105409	Mika 54 - 59 ½ x 55 in.	1015

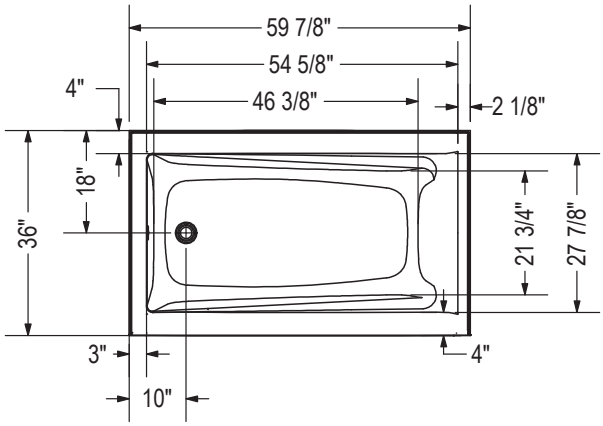

IFS Without System
Single tiling flange

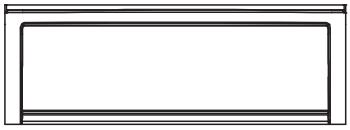

IFS With System
(access panel)
Single tiling flange

1" Single integrated tiling
flange (not shown)
Drop-in model (Shown)

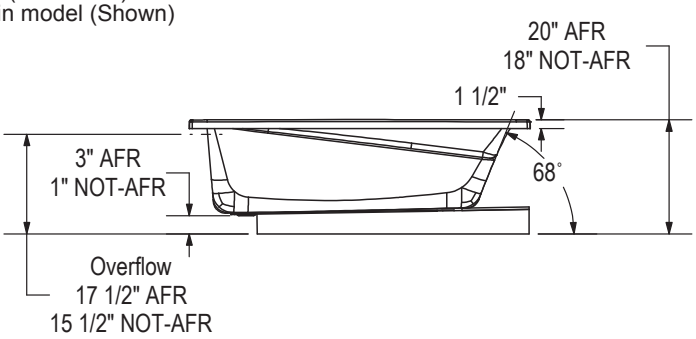

WHIRLPOOL SYSTEM

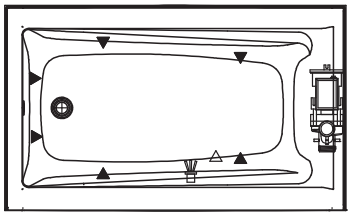

AIR SYTEM

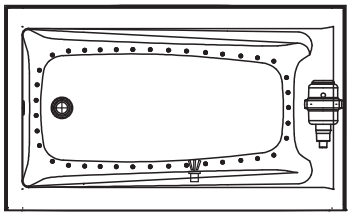

Technical drawing is universal for all Exhibit 6036 configurations.

Wood support design may vary.
Single Integrated tiling flange: 1" height x 1/4'' thickness (not shown)

All dimensions are approximate.
Structure measurement must be verified against the unit to ensure proper fit.

(▲) : Indicates whirlpool jets positioning
(△) : Indicates suction positioning
(●) : Indicates airjets positioning
( ) : Indicates chromatherapy light positioning

Exhibit 6036 IF DTF

Material : Acrylic

Features

- Unique feature: minimalist look with discreet armrests
- Textured bottom
- Alcove installation
- Apron with magnetic access panel available
- Integrated double tiling flange
- Access panel available on IFS models only

EXHIBIT 6036 IF DTF - 106227

SKU	System	Color	Configuration	Dimensions & Weight	Packaging	MSRP
106227-000-001-104	Soaker - No System	White	Left Drain	59 7/8” x 36” x 18” / 72 lb	32 ft³	$ 1370
106227-000-001-105			Right Drain			$ 1370
106227-L-001-001	Whirlpool [1 4]		Left Drain			$ 3157
106227-L-096-001	Combined Whirlpool & Aeroeffect [1 3]					$ 5682
106227-L-103-001	Aeroeffect [1 2 5]					$ 4383
106227-R-001-001	Whirlpool [1 4]		Right Drain			$ 3157
106227-R-096-001	Combined Whirlpool & Aeroeffect [1 3]					$ 5682
106227-R-103-001	Aeroeffect [1 2 5]					$ 4383

COMMON OPTIONS

SKU	Description	MSRP
OPT20029-105	Metal trim kit for air push control (factory installed) Available colors: Chrome **(084)** and Brushed Nickel **(105)**	$ 82
OPT20029-084		$ 82
OPT20137-004	Cable-operated waste and overflow (16 in. to 22 in.) (included in product packaging when purchased) Available colors: White **(001)**, Bone **(004)**, Chrome **(084)** and Brushed Nickel **(105)**	$ 362
OPT20137-084		$ 362
OPT20137-105		$ 362
OPT20137-001		$ 362
OPT10019	Removable access panel	$ 419
OPT10053	One chromatherapy light (factory installed) [54]	$ 790
OPT10095	Water heater assembly for whirlpool and combined systems (factory installed)	$ 1033
OPT10106-084	Metal trim kit for whirlpool and combined systems (factory installed) Available colors: Chrome **(084)** and Brushed Nickel **(105)**	$ 728
OPT10106-105		$ 728

ACCESSORIES

SKU	Description	MSRP
10006923	Flexible main hose (9 ft. extension) for air push control air massage - Kit (sold separately)	$ 209
10004306-001	White foam cushion with 2 suction pads (sold separately) Available color: White **(001)**	$ 138
10028641-084	Metal trim kit for Whirlpool and combined systems (sold separately) Available colors: Chrome **(084)** and Brushed Nickel **(105)**	$ 728
10028641-105		$ 728
10034250-084	Metal trim kit for Aeroeffect with Air Push Control (sold separately) Available colors: Chrome **(084)** and Brushed Nickel **(105)**	$ 82
10034250-105		$ 82
10022491-004	Cable-operated waste and overflow (16 in. to 22 in.) (sold separately) Available colors: White **(001)**, Bone **(004)**, Chrome **(084)** and Brushed Nickel **(105)**	$ 362

FOOTNOTES

No	Description
54	A selection of units come with an access panel by default when equipped with a system. However, if the unit is only equipped with chromatherapy, the access panel will not be provided by default.

RECOMMENDED DOORS - VISIT OUR WEBSITE FOR A COMPLETE LIST OF RECOMMENDED DOORS

SKU	Product Name	Pag.
139398	Halo 56 ½-59 x 59 - 8mm	990
139351	Incognito 57 56-59 x 56 3/4 in. 6mm Tub Door	1007
139354	Incognito 57 56-59 x 56 3/4 in. 8mm Tub Door	1011
135330	Incognito 57 Shaker 56-59 x 56 3/4 in. 8mm Tub Door	1005
135695	Revelation Square 56-59 x 56 ¾-59 ¼ - 8mm	1022
135692	Revelation Square 56-59 x 56 ¾-58 ¼ - 6mm	1020
136692	Revelation Round 56-59 x 56 3/4-59 1/4	1017
136695	Revelation Round 56-59 x 56 ¾-59 ¼ - 8 mm	1018
135320	Uptown 56-59 x 58 in. 8 mm	1024
136270	Duel 56-59 x 55 1/2-59	1003
138760	Inverto 56-59 x 55 ½-59 - 8mm	1013
138485	Vela 56 ½-59 x 59 - 8mm	988
138480		986
134661	Kameleon SC 55-59 x 57 - 6mm	995
134573	Kameleon 55-59 x 57 - 8mm	997
134670	Kameleon SC 55-59 x 57 - 8mm	991
134561	Kameleon 55-59 x 57 - 6mm	999
105410	Polar 54-59 1/2 x 57 1/2 in.	1017
105409	Mika 54 - 59 ½ x 55 in.	1015

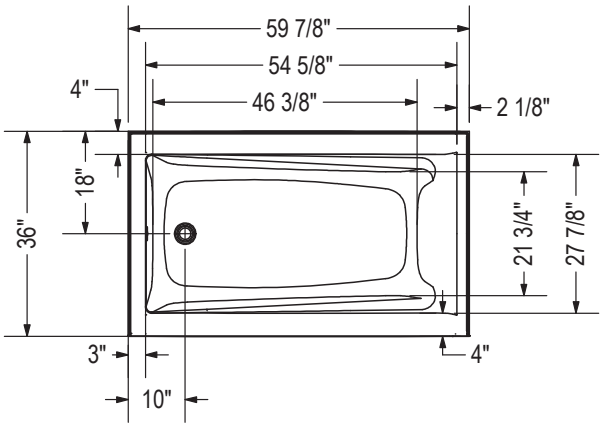

IFS Without System
Single tiling flange

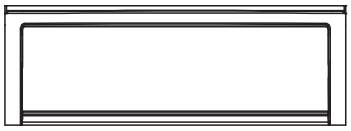

IFS With System
(access panel)
Single tiling flange

1" Single integrated tiling flange (not shown)
2" Double integrated tiling flange (not shown)
Drop-in model (Shown)

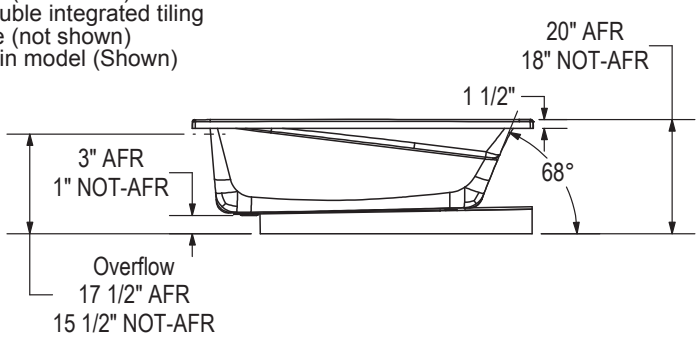

WHIRLPOOL SYSTEM

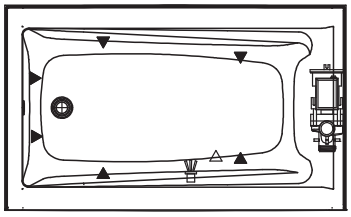

AIR SYSTEM

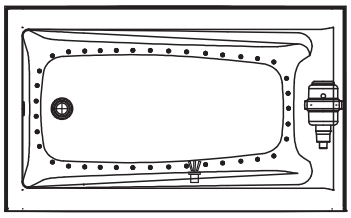

(▲) : Indicates whirlpool jets positioning
(△) : Indicates suction positioning
(●) : Indicates airjets positioning
( ) : Indicates chromatherapy light positioning

Technical drawing is universal for all Exhibit 6036 configurations.

Wood support design may vary.
Single Integrated tiling flange: 1" height x 1/4" thickness (not shown)
Double Integrated tiling flange: 2" height (not shown)

All dimensions are approximate.
Structure measurement must be verified against the unit to ensure proper fit.

Exhibit 6036 IFS

Material : Acrylic

Features

- Rectangular shape bathtub in alcove installation
- Available in Above-the-Floor Rough (AFR) or not
- Minimalist look with discreet armrests and textured floor
- Integrated tiling flange
- When equipped with a system, the unit comes with an access panel

EXHIBIT 6036 IFS - 106172

SKU	System	Color	Configuration	Dimensions & Weight	Packaging	MSRP
106172-000-001-100	Soaker - No System	White	Left Drain	59 7/8” x 36” x 18” / 83 lb	0 ft³	$ 1655
106172-000-001-101			Right Drain			$ 1655
106172-L-001-001	Whirlpool [1 4]		Left Drain			$ 3442
106172-L-096-001	Combined Whirlpool & Aeroeffect [1 3]					$ 5967
106172-L-103-001	Aeroeffect [1 2 5]					$ 4668
106172-R-001-001	Whirlpool [1 4]		Right Drain			$ 3442
106172-R-096-001	Combined Whirlpool & Aeroeffect [1 3]					$ 5967
106172-R-103-001	Aeroeffect [1 2 5]					$ 4668

EXHIBIT 6036 IFS AFR - 106173

SKU	System	Color	Configuration	Dimensions & Weight	Packaging	MSRP
106173-000-001-102	Soaker - No System	White	Left Drain	59 7/8” x 36” x 20” / 83 lb	0 ft³	$ 1655
106173-000-001-103			Right Drain			$ 1655
106173-L-001-001	Whirlpool [1 4]		Left Drain			$ 3442
106173-L-096-001	Combined Whirlpool & Aeroeffect [1 3]					$ 5967
106173-L-103-001	Aeroeffect [1 2 5]					$ 4668
106173-R-001-001	Whirlpool [1 4]		Right Drain			$ 3442
106173-R-096-001	Combined Whirlpool & Aeroeffect [1 3]					$ 5967
106173-R-103-001	Aeroeffect [1 2 5]					$ 4668

COMMON OPTIONS

SKU	Description	MSRP
OPT20029-105	Metal trim kit for air push control (factory installed) Available colors: Chrome **(084)** and Brushed Nickel **(105)**	$ 82
OPT20029-084		$ 82
OPT20137-004	Cable-operated waste and overflow (16 in. to 22 in.) (included in product packaging when purchased) Available colors: White **(001)**, Bone **(004)**, Chrome **(084)** and Brushed Nickel **(105)**	$ 362
OPT20137-084		$ 362
OPT20137-105		$ 362
OPT20137-001		$ 362
OPT10019	Removable access panel	$ 419
OPT10053	One chromatherapy light (factory installed) [54]	$ 790
OPT10095	Water heater assembly for whirlpool and combined systems (factory installed)	$ 1033
OPT10106-084	Metal trim kit for whirlpool and combined systems (factory installed) Available colors: Chrome **(084)** and Brushed Nickel **(105)**	$ 728
OPT10106-105		$ 728

ACCESSORIES

SKU	Description	MSRP
10006923	Flexible main hose (9 ft. extension) for air push control air massage - Kit (sold separately)	$ 209
10004306-001	White foam cushion with 2 suction pads (sold separately) Available color: White **(001)**	$ 138
10028641-084	Metal trim kit for Whirlpool and combined systems (sold separately) Available colors: Chrome **(084)** and Brushed Nickel **(105)**	$ 728
10028641-105		$ 728
10034250-084	Metal trim kit for Aeroeffect with Air Push Control (sold separately) Available colors: Chrome **(084)** and Brushed Nickel **(105)**	$ 82
10034250-105		$ 82
10022491-004	Cable-operated waste and overflow (16 in. to 22 in.) (sold separately) Available colors: White **(001)**, Bone **(004)**, Chrome **(084)** and Brushed Nickel **(105)**	$ 362

FOOTNOTES

No	Description
1	Components for standard colour units equipped with systems are colour-coordinated. Trim kit and/or air push with metallic finish can be added (additional charge applies). For non-standard colour units, please specify trim kit and/or air push colour (additional charge applies for metallic finishes). Please note that the positioning of the system's control could be in conflict with the door if one was installed on the unit. To insure compatibility, please contact customer service.
4	For details on pump position and requirements, see technical drawings on https://www.maax.com. When there is a pump position A or B indicated on the technical drawing, please specify position when ordering.
54	A selection of units come with an access panel by default when equipped with a system. However, if the unit is only equipped with chromatherapy, the access panel will not be provided by default.

RECOMMENDED DOORS - VISIT OUR WEBSITE FOR A COMPLETE LIST OF RECOMMENDED DOORS

SKU	Product Name	Pag.
139398	Halo 56 ½-59 x 59 - 8mm	990
139351	Incognito 57 56-59 x 56 3/4 in. 6mm Tub Door	1007
139354	Incognito 57 56-59 x 56 3/4 in. 8mm Tub Door	1011
135330	Incognito 57 Shaker 56-59 x 56 3/4 in. 8mm Tub Door	1005
135695	Revelation Square 56-59 x 56 ¾-59 ¼ - 8mm	1022
135692	Revelation Square 56-59 x 56 ¾-58 ¼ - 6mm	1020
136692	Revelation Round 56-59 x 56 3/4-59 1/4	1017
136695	Revelation Round 56-59 x 56 ¾-59 ¼ - 8 mm	1018
135320	Uptown 56-59 x 58 in. 8 mm	1024
136270	Duel 56-59 x 55 1/2-59	1003
138760	Inverto 56-59 x 55 ½-59 - 8mm	1013
138485	Vela 56 ½-59 x 59 - 8mm	988
138480		986
134661	Kameleon SC 55-59 x 57 - 6mm	995
134573	Kameleon 55-59 x 57 - 8mm	997
134670	Kameleon SC 55-59 x 57 - 8mm	991
134561	Kameleon 55-59 x 57 - 6mm	999
105410	Polar 54-59 1/2 x 57 1/2 in.	1017
105409	Mika 54 - 59 ½ x 55 in.	1015

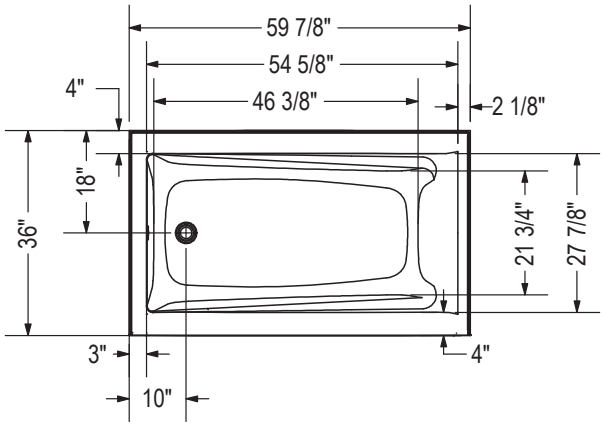

IFS Without System
Single tiling flange

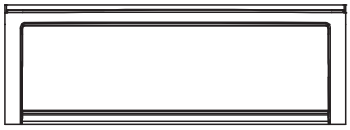

IFS With System
(access panel)
Single tiling flange

1" Single integrated tiling
flange (not shown)
Drop-in model (Shown)

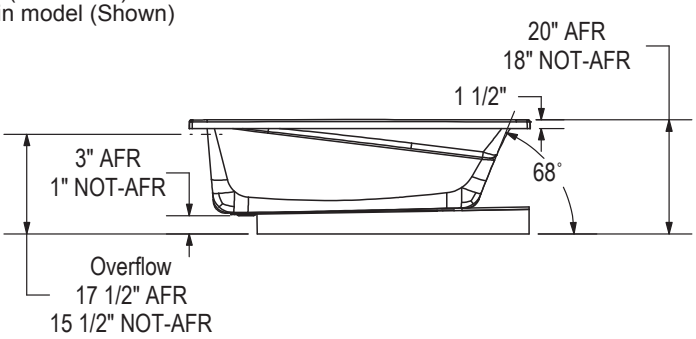

WHIRLPOOL SYSTEM

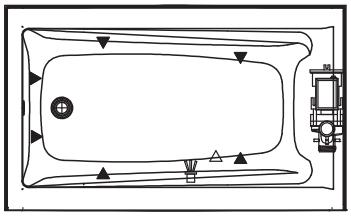

AIR SYTEM

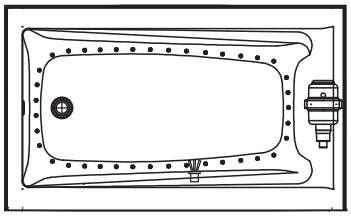

Technical drawing is universal for all Exhibit 6036 configurations.

Wood support design may vary.
Single Integrated tiling flange: 1" height x 1/4'' thickness (not shown)

All dimensions are approximate.
Structure measurement must be verified against the unit to ensure proper fit.

(▲) : Indicates whirlpool jets positioning
(△) : Indicates suction positioning
(●) : Indicates airjets positioning
( ) : Indicates chromatherapy light positioning

Exhibit 6036 IFS DTF

Material : Acrylic

Features

- Rectangular shape bathtub in alcove installation
- Available in Above-the-Floor Rough (AFR) or not
- Minimalist look with discreet armrests and textured floor
- Double tiling flange
- When equipped with a system, the unit comes with an access panel

EXHIBIT 6036 IFS DTF - 106228

SKU	System	Color	Configuration	Dimensions & Weight	Packaging	MSRP
106228-000-001-106	Soaker - No System	White	Left Drain	59 7/8” x 36” x 18” / 80 lb	32 ft³	$ 1655
106228-000-001-107			Right Drain			$ 1655
106228-L-001-001	Whirlpool [1 4]		Left Drain			$ 3442
106228-L-096-001	Combined Whirlpool & Aeroeffect [1 3]					$ 5967
106228-L-103-001	Aeroeffect [1 2 5]					$ 4668
106228-R-001-001	Whirlpool [1 4]		Right Drain			$ 3442
106228-R-096-001	Combined Whirlpool & Aeroeffect [1 3]					$ 5967
106228-R-103-001	Aeroeffect [1 2 5]					$ 4668

EXHIBIT 6036 IFS AFR DTF - 106229

SKU	System	Color	Configuration	Dimensions & Weight	Packaging	MSRP
106229-000-001-108	Soaker - No System	White	Left Drain	59 7/8” x 36” x 20” / 80 lb	32 ft³	$ 1655
106229-000-001-109			Right Drain			$ 1655
106229-L-001-001	Whirlpool [1 4]		Left Drain			$ 3442
106229-L-096-001	Combined Whirlpool & Aeroeffect [1 3]					$ 5967
106229-L-103-001	Aeroeffect [1 2 5]					$ 4668
106229-R-001-001	Whirlpool [1 4]		Right Drain			$ 3442
106229-R-096-001	Combined Whirlpool & Aeroeffect [1 3]					$ 5967
106229-R-103-001	Aeroeffect [1 2 5]					$ 4668

COMMON OPTIONS

SKU	Description	MSRP
OPT20029-105	Metal trim kit for air push control (factory installed) Available colors: Chrome **(084)** and Brushed Nickel **(105)**	$ 82
OPT20029-084		$ 82
OPT20137-004	Cable-operated waste and overflow (16 in. to 22 in.) (included in product packaging when purchased) Available colors: White **(001)**, Bone **(004)**, Chrome **(084)** and Brushed Nickel **(105)**	$ 362
OPT20137-084		$ 362
OPT20137-105		$ 362
OPT20137-001		$ 362
OPT10019	Removable access panel	$ 419
OPT10053	One chromatherapy light (factory installed) [54]	$ 790
OPT10095	Water heater assembly for whirlpool and combined systems (factory installed)	$ 1033
OPT10106-084	Metal trim kit for whirlpool and combined systems (factory installed) Available colors: Chrome **(084)** and Brushed Nickel **(105)**	$ 728
OPT10106-105		$ 728

ACCESSORIES

SKU	Description	MSRP
10006923	Flexible main hose (9 ft. extension) for air push control air massage - Kit (sold separately)	$ 209
10004306-001	White foam cushion with 2 suction pads (sold separately) Available color: White **(001)**	$ 138
10028641-084	Metal trim kit for Whirlpool and combined systems (sold separately) Available colors: Chrome **(084)** and Brushed Nickel **(105)**	$ 728
10028641-105		$ 728
10034250-084	Metal trim kit for Aeroeffect with Air Push Control (sold separately) Available colors: Chrome **(084)** and Brushed Nickel **(105)**	$ 82
10034250-105		$ 82
10022491-004	Cable-operated waste and overflow (16 in. to 22 in.) (sold separately) Available colors: White **(001)**, Bone **(004)**, Chrome **(084)** and Brushed Nickel **(105)**	$ 362

FOOTNOTES

No	Description
54	A selection of units come with an access panel by default when equipped with a system. However, if the unit is only equipped with chromatherapy, the access panel will not be provided by default.

RECOMMENDED DOORS - VISIT OUR WEBSITE FOR A COMPLETE LIST OF RECOMMENDED DOORS

SKU	Product Name	Pag.
139398	Halo 56 ½-59 x 59 - 8mm	990
139351	Incognito 57 56-59 x 56 3/4 in. 6mm Tub Door	1007
139354	Incognito 57 56-59 x 56 3/4 in. 8mm Tub Door	1011
135330	Incognito 57 Shaker 56-59 x 56 3/4 in. 8mm Tub Door	1005
135695	Revelation Square 56-59 x 56 ¾-59 ¼ - 8mm	1022
135692	Revelation Square 56-59 x 56 ¾-58 ¼ - 6mm	1020
136692	Revelation Round 56-59 x 56 3/4-59 1/4	1017
136695	Revelation Round 56-59 x 56 ¾-59 ¼ - 8 mm	1018
135320	Uptown 56-59 x 58 in. 8 mm	1024
136270	Duel 56-59 x 55 1/2-59	1003
138760	Inverto 56-59 x 55 ½-59 - 8mm	1013
138485	Vela 56 ½-59 x 59 - 8mm	988
138480		986
134661	Kameleon SC 55-59 x 57 - 6mm	995
134573	Kameleon 55-59 x 57 - 8mm	997
134670	Kameleon SC 55-59 x 57 - 8mm	991
134561	Kameleon 55-59 x 57 - 6mm	999
105410	Polar 54-59 1/2 x 57 1/2 in.	1017
105409	Mika 54 - 59 ½ x 55 in.	1015

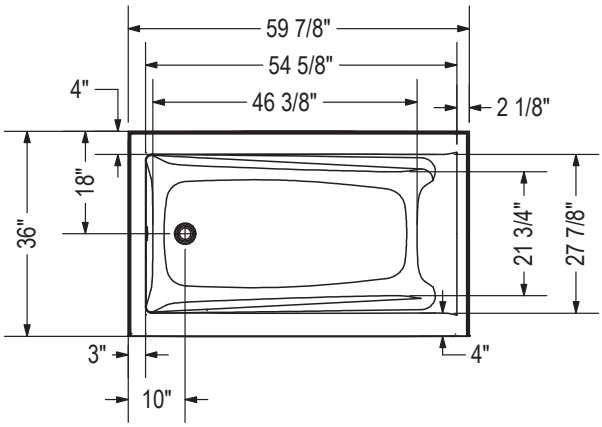

IFS Without System
Single tiling flange

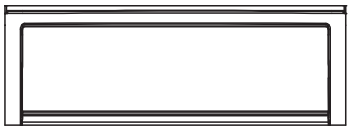

IFS With System
(access panel)
Single tiling flange

1" Single integrated tiling flange (not shown)
2" Double integrated tiling flange (not shown)
Drop-in model (Shown)

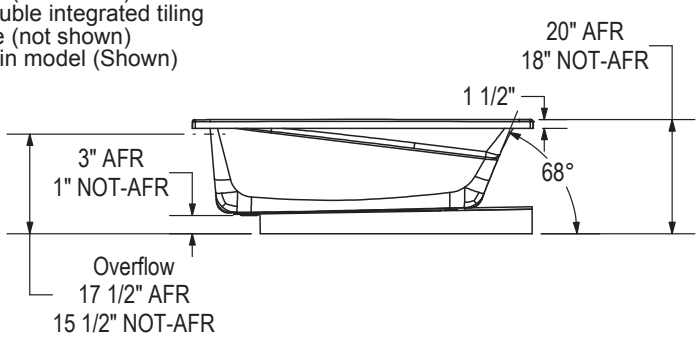

WHIRLPOOL SYSTEM

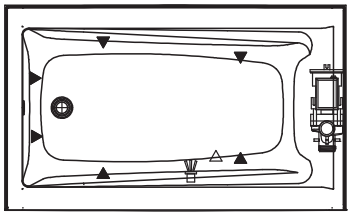

AIR SYSTEM

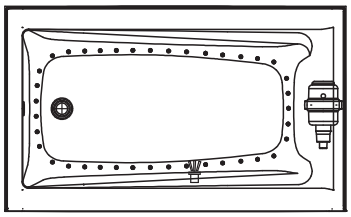

(▲) : Indicates whirlpool jets positioning
(△) : Indicates suction positioning
(●) : Indicates airjets positioning
( ) : Indicates chromatherapy light positioning

Technical drawing is universal for all Exhibit 6036 configurations.

Wood support design may vary.
Single Integrated tiling flange: 1" height x 1/4" thickness (not shown)
Double Integrated tiling flange: 2" height (not shown)

All dimensions are approximate.
Structure measurement must be verified against the unit to ensure proper fit.

Exhibit 6042

Material : Acrylic

Features

- Rectangular shape bathtub
- Drop-in or alcove installation with tiling flange
- Minimalist look with discreet armrests and textured floor
- End drain

EXHIBIT 6042 - 106250

SKU	System	Color	Configuration	Dimensions & Weight	Packaging	MSRP
106250-000-001-000	Soaker - No System	White	End Drain	59 7/8” x 42” x 18” / 76 lb	0 ft^3	$ 1605
106250-001-001-000	Whirlpool [1 4]					$ 3392
106250-002-001-100	Multi-Pack [9]					$ 7245
106250-096-001	Combined Whirlpool & Aeroeffect [1 3]					$ 5917
106250-103-001-000	Aeroeffect [1 2 5]					$ 4618

COMMON OPTIONS

SKU	Description	MSRP
OPT20137-004	Cable-operated waste and overflow (16 in. to 22 in.) (included in product packaging when purchased) Available colors: White **(001)**, Bone **(004)**, Chrome **(084)** and Brushed Nickel **(105)**	$ 362
OPT20137-084		$ 362
OPT20137-105		$ 362
OPT20137-001		$ 362
OPT10053	One chromatherapy light (factory installed) [54]	$ 790
OPT10095	Water heater assembly for whirlpool and combined systems (factory installed)	$ 1033
OPT10106-084	Metal trim kit for whirlpool and combined systems (factory installed) Available colors: Chrome **(084)** and Brushed Nickel **(105)**	$ 728
OPT10106-105		$ 728
OPT20029-105	Metal trim kit for air push control (factory installed) Available colors: Chrome **(084)** and Brushed Nickel **(105)**	$ 82
OPT20029-084		$ 82

ACCESSORIES

SKU	Description	MSRP
10006923	Flexible main hose (9 ft. extension) for air push control air massage - Kit (sold separately)	$ 209
10004306-001	White foam cushion with 2 suction pads (sold separately) Available color: White **(001)**	$ 138
10028641-084	Metal trim kit for Whirlpool and combined systems (sold separately) Available colors: Chrome **(084)** and Brushed Nickel **(105)**	$ 728
10028641-105		$ 728
10034250-084	Metal trim kit for Aeroeffect with Air Push Control (sold separately) Available colors: Chrome **(084)** and Brushed Nickel **(105)**	$ 82
10034250-105		$ 82
10022491-004	Cable-operated waste and overflow (16 in. to 22 in.) (sold separately) Available colors: White **(001)**, Bone **(004)**, Chrome **(084)** and Brushed Nickel **(105)**	$ 362

FOOTNOTES

No	Description
1	Components for standard colour units equipped with systems are colour-coordinated. Trim kit and/or air push with metallic finish can be added (additional charge applies). For non-standard colour units, please specify trim kit and/or air push colour (additional charge applies for metallic finishes). Please note that the positioning of the system’s control could be in conflict with the door if one was installed on the unit. To insure compatibility, please contact customer service.

FOOTNOTES

No	Description
2	Please order flexible main hose 10006923 for installation of the blower further than 3 ft from the bathtub. For the Tandem models and the Serenade models (freestanding and drop-in), the blower is always remote and not factory installed so a 9 ft flexible main hose is included. Please note that the positioning of the system's control could be in conflict with the door if one was installed on the unit. To insure compatibility, please contact customer service.
4	For details on pump position and requirements, see technical drawings on https://www.maax.com. When there is a pump position A or B indicated on the technical drawing, please specify position when ordering.
5	For details on blower position and requirements, see technical drawings on https://www.maax.com. When there is a blower position A or B indicated on the technical drawing, please specify position when ordering.
54	A selection of units come with an access panel by default when equipped with a system. However, if the unit is only equipped with chromatherapy, the access panel will not be provided by default.

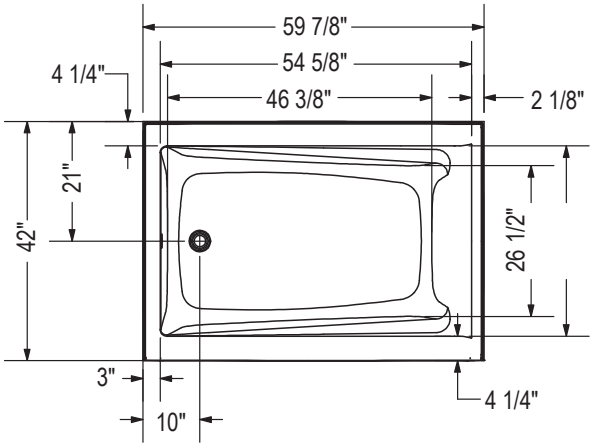

IFS Without System
Single tiling flange

IFS With System
(access panel)
Single tiling flange

1" Single integrated tiling
flange (not shown)
Drop-in model (Shown)

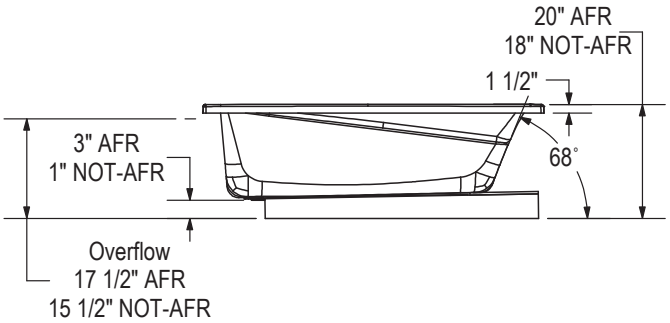

WHIRLPOOL SYSTEM

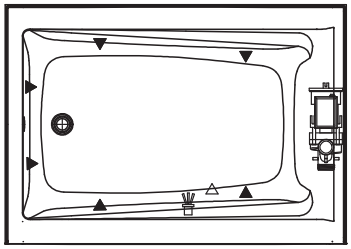

AIR SYTEM

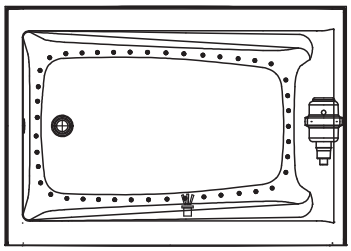

(▲) : Indicates whirlpool jets positioning
(△) : Indicates suction positioning
(●) : Indicates airjets positioning
( ) : Indicates chromatherapy light positioning

Technical drawing is universal for all Exhibit 6042 configurations.

Wood support design may vary.
Single Integrated tiling flange: 1" height x 1/4'' thickness (not shown)

All dimensions are approximate.
Structure measurement must be verified against the unit to ensure proper fit.

Exhibit 6042 IF

Material : Acrylic

Features

- Rectangular shape bathtub
- Drop-in or alcove installation with tiling flange
- Minimalist look with discreet armrests and textured floor
- End drain

EXHIBIT 6042 IF - 106174

SKU	System	Color	Configuration	Dimensions & Weight	Packaging	MSRP
106174-000-001-001	Soaker - No System	White	Left Drain	59 7/8” x 42” x 18” / 73 lb	37 ft³	$ 1605
106174-000-001-002			Right Drain			$ 1605
106174-001-001-001	Whirlpool [1 4]		Left Drain			$ 3392
106174-001-001-002			Right Drain			$ 3392
106174-L-002-001	Multi-Pack [9]		Left Drain			$ 7245
106174-L-096-001	Combined Whirlpool & Aeroeffect [1 3]					$ 5917
106174-L-103-001	Aeroeffect [1 2 5]					$ 4618
106174-R-002-001	Multi-Pack [9]		Right Drain			$ 7245
106174-R-096-001	Combined Whirlpool & Aeroeffect [1 3]					$ 5917
106174-R-103-001	Aeroeffect [1 2 5]					$ 4618

COMMON OPTIONS

SKU	Description	MSRP
OPT20137-004	Cable-operated waste and overflow (16 in. to 22 in.) (included in product packaging when purchased) Available colors: White **(001)**, Bone **(004)**, Chrome **(084)** and Brushed Nickel **(105)**	$ 362
OPT20137-084		$ 362
OPT20137-105		$ 362
OPT20137-001		$ 362
OPT10053	One chromatherapy light (factory installed) [54]	$ 790
OPT10095	Water heater assembly for whirlpool and combined systems (factory installed)	$ 1033
OPT10106-084	Metal trim kit for whirlpool and combined systems (factory installed) Available colors: Chrome **(084)** and Brushed Nickel **(105)**	$ 728
OPT10106-105		$ 728
OPT20029-105	Metal trim kit for air push control (factory installed) Available colors: Chrome **(084)** and Brushed Nickel **(105)**	$ 82
OPT20029-084		$ 82

ACCESSORIES

SKU	Description	MSRP
10006923	Flexible main hose (9 ft. extension) for air push control air massage - Kit (sold separately)	$ 209
10004306-001	White foam cushion with 2 suction pads (sold separately) Available color: White **(001)**	$ 138
10028641-084	Metal trim kit for Whirlpool and combined systems (sold separately) Available colors: Chrome **(084)** and Brushed Nickel **(105)**	$ 728
10028641-105		$ 728
10034250-084	Metal trim kit for Aeroeffect with Air Push Control (sold separately) Available colors: Chrome **(084)** and Brushed Nickel **(105)**	$ 82
10034250-105		$ 82
10022491-004	Cable-operated waste and overflow (16 in. to 22 in.) (sold separately) Available colors: White **(001)**, Bone **(004)**, Chrome **(084)** and Brushed Nickel **(105)**	$ 362

FOOTNOTES

No	Description
3	The blower is not factory installed (remote). 9 ft flexible main hose included. Please note that the positioning of the system's control could be in conflict with the door if one was installed on the unit. To insure compatibility, please contact customer service.
54	A selection of units come with an access panel by default when equipped with a system. However, if the unit is only equipped with chromatherapy, the access panel will not be provided by default.

RECOMMENDED DOORS - VISIT OUR WEBSITE FOR A COMPLETE LIST OF RECOMMENDED DOORS

SKU	Product Name	Pag.
139398	Halo 56 ½-59 x 59 - 8mm	990
139351	Incognito 57 56-59 x 56 3/4 in. 6mm Tub Door	1007
139354	Incognito 57 56-59 x 56 3/4 in. 8mm Tub Door	1011
135330	Incognito 57 Shaker 56-59 x 56 3/4 in. 8mm Tub Door	1005
135695	Revelation Square 56-59 x 56 ¾-59 ¼ - 8mm	1022
135692	Revelation Square 56-59 x 56 ¾-58 ¼ - 6mm	1020
136692	Revelation Round 56-59 x 56 3/4-59 1/4	1017
136695	Revelation Round 56-59 x 56 ¾-59 ¼ - 8 mm	1018
135320	Uptown 56-59 x 58 in. 8 mm	1024
136270	Duel 56-59 x 55 1/2-59	1003
138760	Inverto 56-59 x 55 ½-59 - 8mm	1013
138485	Vela 56 ½-59 x 59 - 8mm	988
138480		986
134661	Kameleon SC 55-59 x 57 - 6mm	995
134573	Kameleon 55-59 x 57 - 8mm	997
134670	Kameleon SC 55-59 x 57 - 8mm	991
134561	Kameleon 55-59 x 57 - 6mm	999
105410	Polar 54-59 1/2 x 57 1/2 in.	1017
105409	Mika 54 - 59 ½ x 55 in.	1015

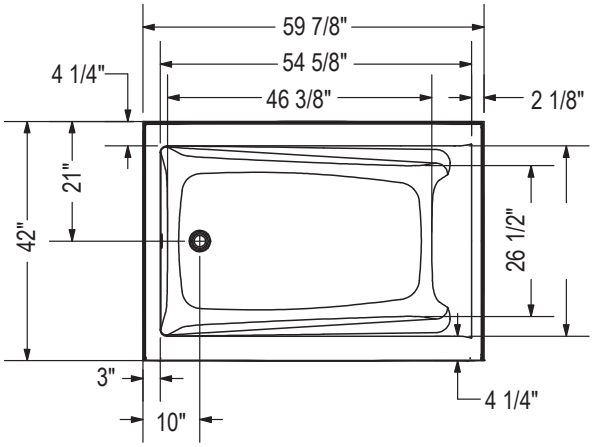

IFS Without System
Single tiling flange

IFS With System
(access panel)
Single tiling flange

1" Single integrated tiling
flange (not shown)
Drop-in model (Shown)

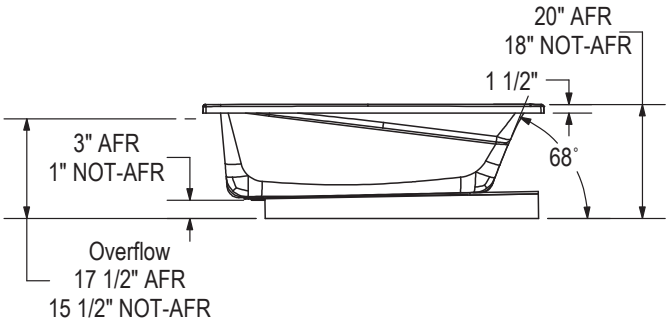

WHIRLPOOL SYSTEM

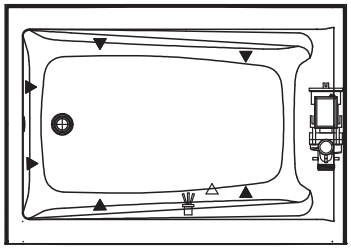

AIR SYTEM

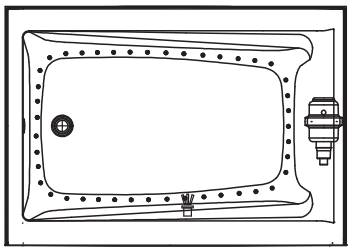

(▲) : Indicates whirlpool jets positioning
(△) : Indicates suction positioning
(●) : Indicates airjets positioning
( ) : Indicates chromatherapy light positioning

Technical drawing is universal for all Exhibit 6042 configurations.

Wood support design may vary.
Single Integrated tiling flange: 1" height x 1/4'' thickness (not shown)

All dimensions are approximate.
Structure measurement must be verified against the unit to ensure proper fit.

Exhibit 6042 IF DTF

Material : Acrylic

Features

- Unique feature: minimalist look with discreet armrests
- Textured bottom
- Alcove installation
- Apron with magnetic access panel available
- Integrated double tiling flange
- Access panel available on IFS models only

EXHIBIT 6042 IF DTF - 106230

SKU	System	Color	Configuration	Dimensions & Weight	Packaging	MSRP
106230-000-001-104	Soaker - No System	White	Left Drain	59 7/8” x 42” x 18” / 72 lb	32 ft³	$ 1605
106230-000-001-105			Right Drain			$ 1605
106230-L-001-001	Whirlpool [1 4]		Left Drain			$ 3392
106230-L-096-001	Combined Whirlpool & Aeroeffect [1 3]					$ 5917
106230-L-103-001	Aeroeffect [1 2 5]					$ 4618
106230-R-001-001	Whirlpool [1 4]		Right Drain			$ 3392
106230-R-096-001	Combined Whirlpool & Aeroeffect [1 3]					$ 5917
106230-R-103-001	Aeroeffect [1 2 5]					$ 4618

COMMON OPTIONS

SKU	Description	MSRP
OPT20029-105	Metal trim kit for air push control (factory installed) Available colors: Chrome **(084)** and Brushed Nickel **(105)**	$ 82
OPT20029-084		$ 82
OPT20137-004	Cable-operated waste and overflow (16 in. to 22 in.) (included in product packaging when purchased) Available colors: White **(001)**, Bone **(004)**, Chrome **(084)** and Brushed Nickel **(105)**	$ 362
OPT20137-084		$ 362
OPT20137-105		$ 362
OPT20137-001		$ 362
OPT10019	Removable access panel	$ 419
OPT10053	One chromatherapy light (factory installed) [54]	$ 790
OPT10095	Water heater assembly for whirlpool and combined systems (factory installed)	$ 1033
OPT10106-084	Metal trim kit for whirlpool and combined systems (factory installed) Available colors: Chrome **(084)** and Brushed Nickel **(105)**	$ 728
OPT10106-105		$ 728

ACCESSORIES

SKU	Description	MSRP
10006923	Flexible main hose (9 ft. extension) for air push control air massage - Kit (sold separately)	$ 209
10004306-001	White foam cushion with 2 suction pads (sold separately) Available color: White **(001)**	$ 138
10028641-084	Metal trim kit for Whirlpool and combined systems (sold separately) Available colors: Chrome **(084)** and Brushed Nickel **(105)**	$ 728
10028641-105		$ 728
10034250-084	Metal trim kit for Aeroeffect with Air Push Control (sold separately) Available colors: Chrome **(084)** and Brushed Nickel **(105)**	$ 82
10034250-105		$ 82
10022491-004	Cable-operated waste and overflow (16 in. to 22 in.) (sold separately) Available colors: White **(001)**, Bone **(004)**, Chrome **(084)** and Brushed Nickel **(105)**	$ 362

FOOTNOTES

No	Description
1	Components for standard colour units equipped with systems are colour-coordinated. Trim kit and/or air push with metallic finish can be added (additional charge applies). For non-standard colour units, please specify trim kit and/or air push colour (additional charge applies for metallic finishes). Please note that the positioning of the system's control could be in conflict with the door if one was installed on the unit. To insure compatibility, please contact customer service.
2	Please order flexible main hose 10006923 for installation of the blower further than 3 ft from the bathtub. For the Tandem models and the Serenade models (freestanding and drop-in), the blower is always remote and not factory installed so a 9 ft flexible main hose is included. Please note that the positioning of the system's control could be in conflict with the door if one was installed on the unit. To insure compatibility, please contact customer service.
3	The blower is not factory installed (remote). 9 ft flexible main hose included. Please note that the positioning of the system's control could be in conflict with the door if one was installed on the unit. To insure compatibility, please contact customer service.
4	For details on pump position and requirements, see technical drawings on https://www.maax.com. When there is a pump position A or B indicated on the technical drawing, please specify position when ordering.
5	For details on blower position and requirements, see technical drawings on https://www.maax.com. When there is a blower position A or B indicated on the technical drawing, please specify position when ordering.
54	A selection of units come with an access panel by default when equipped with a system. However, if the unit is only equipped with chromatherapy, the access panel will not be provided by default.

RECOMMENDED DOORS - VISIT OUR WEBSITE FOR A COMPLETE LIST OF RECOMMENDED DOORS

SKU	Product Name	Pag.
139398	Halo 56 ½-59 x 59 - 8mm	990
139351	Incognito 57 56-59 x 56 3/4 in. 6mm Tub Door	1007
139354	Incognito 57 56-59 x 56 3/4 in. 8mm Tub Door	1011
135330	Incognito 57 Shaker 56-59 x 56 3/4 in. 8mm Tub Door	1005
135695	Revelation Square 56-59 x 56 ¾-59 ¼ - 8mm	1022
135692	Revelation Square 56-59 x 56 ¾-58 ¼ - 6mm	1020
136692	Revelation Round 56-59 x 56 3/4-59 1/4	1017
136695	Revelation Round 56-59 x 56 ¾-59 ¼ - 8 mm	1018
135320	Uptown 56-59 x 58 in. 8 mm	1024
136270	Duel 56-59 x 55 1/2-59	1003
138760	Inverto 56-59 x 55 ½-59 - 8mm	1013
138485	Vela 56 ½-59 x 59 - 8mm	988
138480		986
134661	Kameleon SC 55-59 x 57 - 6mm	995
134573	Kameleon 55-59 x 57 - 8mm	997
134670	Kameleon SC 55-59 x 57 - 8mm	991
134561	Kameleon 55-59 x 57 - 6mm	999
105410	Polar 54-59 1/2 x 57 1/2 in.	1017
105409	Mika 54 - 59 ½ x 55 in.	1015

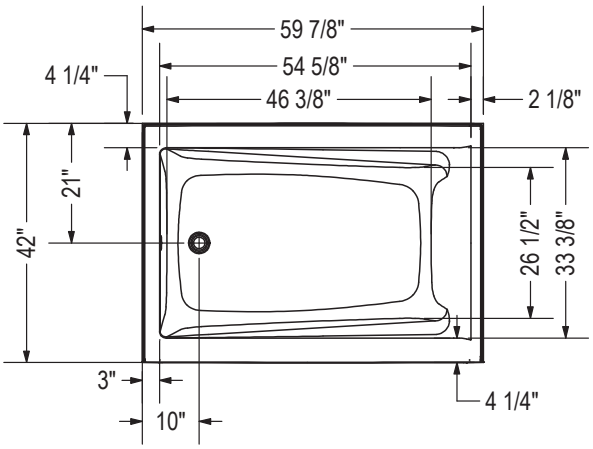

IFS Without System
Single tiling flange

IFS With System
(access panel)
Single tiling flange

1" Single integrated tiling flange (not shown)
2" Double integrated tiling flange (not shown)
Drop-in model (Shown)

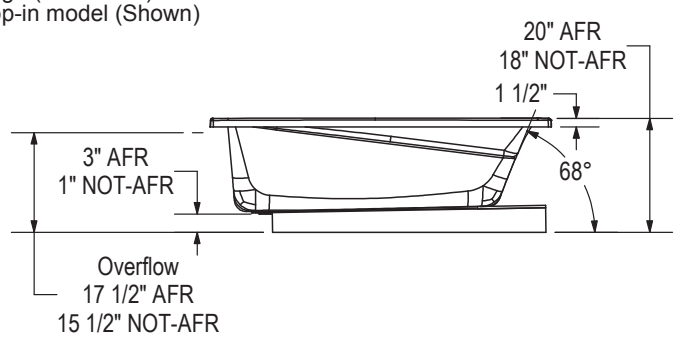

WHIRLPOOL SYSTEM

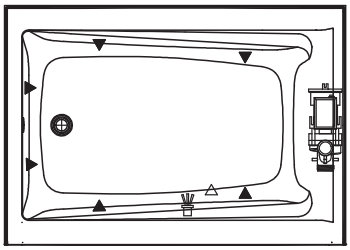

AIR SYSTEM

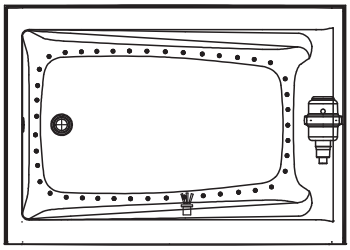

(▲) : Indicates whirlpool jets positioning
(△) : Indicates suction positioning
(●) : Indicates airjets positioning
( ) : Indicates chromatherapy light positioning

Technical drawing is universal for all Exhibit 6042 configurations.

Wood support design may vary.
Single Integrated tiling flange: 1" height x 1/4'' thickness (not shown)
Double Integrated tiling flange: 2" height (not shown)

All dimensions are approximate.
Structure measurement must be verified against the unit to ensure proper fit.

Exhibit 6042 IFS

Material : Acrylic

Features

- Rectangular shape bathtub in alcove installation
- Available in Above-the-Floor Rough (AFR) or not
- Minimalist look with discreet armrests and textured floor
- Integrated tiling flange
- When equipped with a system, the unit comes with an access panel

EXHIBIT 6042 IFS - 106175

SKU	System	Color	Configuration	Dimensions & Weight	Packaging	MSRP
106175-000-001-100	Soaker - No System	White	Left Drain	59 7/8” x 42” x 18” / 81 lb	37 ft³	$ 1747
106175-000-001-101			Right Drain			$ 1747
106175-L-001-001	Whirlpool [1 4]		Left Drain			$ 3534
106175-L-096-001	Combined Whirlpool & Aeroeffect [1 3]					$ 6059
106175-L-103-001	Aeroeffect [1 2 5]					$ 4760
106175-R-001-001	Whirlpool [1 4]		Right Drain			$ 3534
106175-R-096-001	Combined Whirlpool & Aeroeffect [1 3]					$ 6059
106175-R-103-001	Aeroeffect [1 2 5]					$ 4760

EXHIBIT 6042 IFS AFR - 106176

SKU	System	Color	Configuration	Dimensions & Weight	Packaging	MSRP
106176-000-001-102	Soaker - No System	White	Left Drain	59 7/8” x 42” x 20” / 81 lb	37 ft³	$ 1747
106176-000-001-103			Right Drain			$ 1747
106176-001-001-100	Whirlpool [1 4]		Left Drain			$ 3534
106176-001-001-101			Right Drain			$ 3534
106176-L-096-001	Combined Whirlpool & Aeroeffect [1 3]		Left Drain			$ 6059
106176-L-103-001	Aeroeffect [1 2 5]					$ 4760
106176-R-096-001	Combined Whirlpool & Aeroeffect [1 3]		Right Drain			$ 6059
106176-R-103-001	Aeroeffect [1 2 5]					$ 4760

COMMON OPTIONS

SKU	Description	MSRP
OPT20029-105	Metal trim kit for air push control (factory installed) Available colors: Chrome **(084)** and Brushed Nickel **(105)**	$ 82
OPT20029-084		$ 82
OPT20137-004	Cable-operated waste and overflow (16 in. to 22 in.) (included in product packaging when purchased) Available colors: White **(001)**, Bone **(004)**, Chrome **(084)** and Brushed Nickel **(105)**	$ 362
OPT20137-084		$ 362
OPT20137-105		$ 362
OPT20137-001		$ 362
OPT10019	Removable access panel	$ 419
OPT10053	One chromatherapy light (factory installed) [54]	$ 790
OPT10095	Water heater assembly for whirlpool and combined systems (factory installed)	$ 1033
OPT10106-084	Metal trim kit for whirlpool and combined systems (factory installed) Available colors: Chrome **(084)** and Brushed Nickel **(105)**	$ 728
OPT10106-105		$ 728

ACCESSORIES

SKU	Description	MSRP
10006923	Flexible main hose (9 ft. extension) for air push control air massage - Kit (sold separately)	$ 209
10004306-001	White foam cushion with 2 suction pads (sold separately) Available color: White **(001)**	$ 138
10028641-084	Metal trim kit for Whirlpool and combined systems (sold separately) Available colors: Chrome **(084)** and Brushed Nickel **(105)**	$ 728
10028641-105		$ 728
10034250-084	Metal trim kit for Aeroeffect with Air Push Control (sold separately) Available colors: Chrome **(084)** and Brushed Nickel **(105)**	$ 82
10034250-105		$ 82
10022491-004	Cable-operated waste and overflow (16 in. to 22 in.) (sold separately) Available colors: White **(001)**, Bone **(004)**, Chrome **(084)** and Brushed Nickel **(105)**	$ 362

FOOTNOTES

No	Description
1	Components for standard colour units equipped with systems are colour-coordinated. Trim kit and/or air push with metallic finish can be added (additional charge applies). For non-standard colour units, please specify trim kit and/or air push colour (additional charge applies for metallic finishes). Please note that the positioning of the system's control could be in conflict with the door if one was installed on the unit. To insure compatibility, please contact customer service.
2	Please order flexible main hose 10006923 for installation of the blower further than 3 ft from the bathtub. For the Tandem models and the Serenade models (freestanding and drop-in), the blower is always remote and not factory installed so a 9 ft flexible main hose is included. Please note that the positioning of the system's control could be in conflict with the door if one was installed on the unit. To insure compatibility, please contact customer service.
3	The blower is not factory installed (remote). 9 ft flexible main hose included. Please note that the positioning of the system's control could be in conflict with the door if one was installed on the unit. To insure compatibility, please contact customer service.
4	For details on pump position and requirements, see technical drawings on https://www.maax.com. When there is a pump position A or B indicated on the technical drawing, please specify position when ordering.
5	For details on blower position and requirements, see technical drawings on https://www.maax.com. When there is a blower position A or B indicated on the technical drawing, please specify position when ordering.
54	A selection of units come with an access panel by default when equipped with a system. However, if the unit is only equipped with chromatherapy, the access panel will not be provided by default.

RECOMMENDED DOORS - VISIT OUR WEBSITE FOR A COMPLETE LIST OF RECOMMENDED DOORS

SKU	Product Name	Pag.
139398	Halo 56 ½-59 x 59 - 8mm	990
139351	Incognito 57 56-59 x 56 3/4 in. 6mm Tub Door	1007
139354	Incognito 57 56-59 x 56 3/4 in. 8mm Tub Door	1011
135330	Incognito 57 Shaker 56-59 x 56 3/4 in. 8mm Tub Door	1005
135695	Revelation Square 56-59 x 56 ¾-59 ¼ - 8mm	1022
135692	Revelation Square 56-59 x 56 ¾-58 ¼ - 6mm	1020
136692	Revelation Round 56-59 x 56 3/4-59 1/4	1017
136695	Revelation Round 56-59 x 56 ¾-59 ¼ - 8 mm	1018
135320	Uptown 56-59 x 58 in. 8 mm	1024
136270	Duel 56-59 x 55 1/2-59	1003
138760	Inverto 56-59 x 55 ½-59 - 8mm	1013
138485	Vela 56 ½-59 x 59 - 8mm	988
138480		986
134661	Kameleon SC 55-59 x 57 - 6mm	995
134573	Kameleon 55-59 x 57 - 8mm	997
134670	Kameleon SC 55-59 x 57 - 8mm	991
134561	Kameleon 55-59 x 57 - 6mm	999
105410	Polar 54-59 1/2 x 57 1/2 in.	1017
105409	Mika 54 - 59 ½ x 55 in.	1015

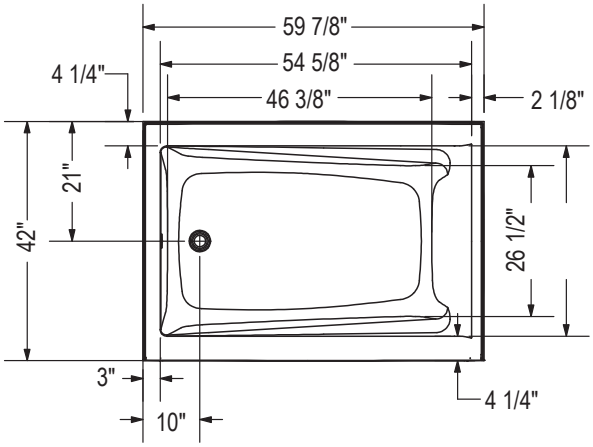

IFS Without System
Single tiling flange

IFS With System
(access panel)
Single tiling flange

1" Single integrated tiling
flange (not shown)
Drop-in model (Shown)

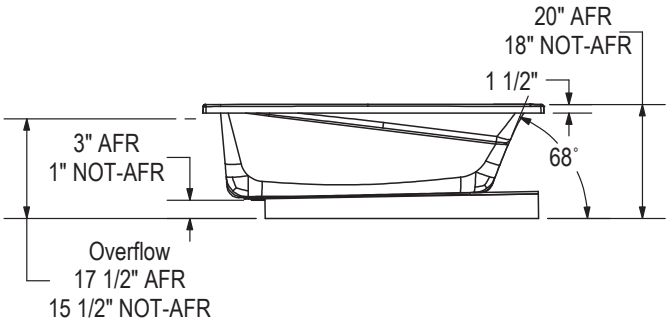

WHIRLPOOL SYSTEM

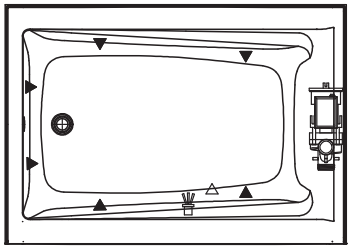

AIR SYTEM

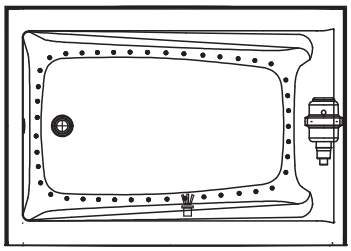

(▲) : Indicates whirlpool jets positioning
(△) : Indicates suction positioning
(●) : Indicates airjets positioning
( ) : Indicates chromatherapy light positioning

Technical drawing is universal for all Exhibit 6042 configurations.

Wood support design may vary.
Single Integrated tiling flange: 1" height x 1/4'' thickness (not shown)

All dimensions are approximate.
Structure measurement must be verified against the unit to ensure proper fit.

Exhibit 6042 IFS DTF

Material : Acrylic

Features

- Rectangular shape bathtub in alcove installation
- Available in Above-the-Floor Rough (AFR) or not
- Minimalist look with discreet armrests and textured floor
- Integrated double tiling flange
- When equipped with a system, the unit comes with an access panel

EXHIBIT 6042 IFS DTF - 106231

SKU	System	Color	Configuration	Dimensions & Weight	Packaging	MSRP
106231-000-001-106	Soaker - No System	White	Left Drain	59 7/8” x 42” x 18” / 81 lb	37 ft³	$ 1747
106231-000-001-107			Right Drain			$ 1747
106231-L-001-001	Whirlpool [1 4]		Left Drain			$ 3534
106231-L-096-001	Combined Whirlpool & Aeroeffect [1 3]					$ 6059
106231-L-103-001	Aeroeffect [1 2 5]					$ 4760
106231-R-001-001	Whirlpool [1 4]		Right Drain			$ 3534
106231-R-096-001	Combined Whirlpool & Aeroeffect [1 3]					$ 6059
106231-R-103-001	Aeroeffect [1 2 5]					$ 4760

EXHIBIT 6042 IFS AFR DTF - 106232

SKU	System	Color	Configuration	Dimensions & Weight	Packaging	MSRP
106232-000-001-108	Soaker - No System	White	Left Drain	59 7/8” x 42” x 20” / 81 lb	37 ft³	$ 1747
106232-000-001-109			Right Drain			$ 1747
106232-L-001-001	Whirlpool [1 4]		Left Drain			$ 3534
106232-L-096-001	Combined Whirlpool & Aeroeffect [1 3]					$ 6059
106232-L-103-001	Aeroeffect [1 2 5]					$ 4760
106232-R-001-001	Whirlpool [1 4]		Right Drain			$ 3534
106232-R-096-001	Combined Whirlpool & Aeroeffect [1 3]					$ 6059
106232-R-103-001	Aeroeffect [1 2 5]					$ 4760

COMMON OPTIONS

SKU	Description	MSRP
OPT20029-105	Metal trim kit for air push control (factory installed) Available colors: Chrome **(084)** and Brushed Nickel **(105)**	$ 82
OPT20029-084		$ 82
OPT20137-004	Cable-operated waste and overflow (16 in. to 22 in.) (included in product packaging when purchased) Available colors: White **(001)**, Bone **(004)**, Chrome **(084)** and Brushed Nickel **(105)**	$ 362
OPT20137-084		$ 362
OPT20137-105		$ 362
OPT20137-001		$ 362
OPT10019	Removable access panel	$ 419
OPT10053	One chromatherapy light (factory installed) [54]	$ 790
OPT10095	Water heater assembly for whirlpool and combined systems (factory installed)	$ 1033
OPT10106-084	Metal trim kit for whirlpool and combined systems (factory installed) Available colors: Chrome **(084)** and Brushed Nickel **(105)**	$ 728
OPT10106-105		$ 728

ACCESSORIES

SKU	Description	MSRP
10006923	Flexible main hose (9 ft. extension) for air push control air massage - Kit (sold separately)	$ 209
10004306-001	White foam cushion with 2 suction pads (sold separately) Available color: White **(001)**	$ 138
10028641-084	Metal trim kit for Whirlpool and combined systems (sold separately) Available colors: Chrome **(084)** and Brushed Nickel **(105)**	$ 728
10028641-105		$ 728
10034250-084	Metal trim kit for Aeroeffect with Air Push Control (sold separately) Available colors: Chrome **(084)** and Brushed Nickel **(105)**	$ 82
10034250-105		$ 82
10022491-004	Cable-operated waste and overflow (16 in. to 22 in.) (sold separately) Available colors: White **(001)**, Bone **(004)**, Chrome **(084)** and Brushed Nickel **(105)**	$ 362

FOOTNOTES

No	Description
54	A selection of units come with an access panel by default when equipped with a system. However, if the unit is only equipped with chromatherapy, the access panel will not be provided by default.

RECOMMENDED DOORS - VISIT OUR WEBSITE FOR A COMPLETE LIST OF RECOMMENDED DOORS

SKU	Product Name	Pag.
139398	Halo 56 ½-59 x 59 - 8mm	990
139351	Incognito 57 56-59 x 56 3/4 in. 6mm Tub Door	1007
139354	Incognito 57 56-59 x 56 3/4 in. 8mm Tub Door	1011
135330	Incognito 57 Shaker 56-59 x 56 3/4 in. 8mm Tub Door	1005
135695	Revelation Square 56-59 x 56 ¾-59 ¼ - 8mm	1022
135692	Revelation Square 56-59 x 56 ¾-58 ¼ - 6mm	1020
136692	Revelation Round 56-59 x 56 3/4-59 1/4	1017
136695	Revelation Round 56-59 x 56 ¾-59 ¼ - 8 mm	1018
135320	Uptown 56-59 x 58 in. 8 mm	1024
136270	Duel 56-59 x 55 1/2-59	1003
138760	Inverto 56-59 x 55 ½-59 - 8mm	1013
138485	Vela 56 ½-59 x 59 - 8mm	988
138480		986
134661	Kameleon SC 55-59 x 57 - 6mm	995
134573	Kameleon 55-59 x 57 - 8mm	997
134670	Kameleon SC 55-59 x 57 - 8mm	991
134561	Kameleon 55-59 x 57 - 6mm	999
105410	Polar 54-59 1/2 x 57 1/2 in.	1017
105409	Mika 54 - 59 ½ x 55 in.	1015

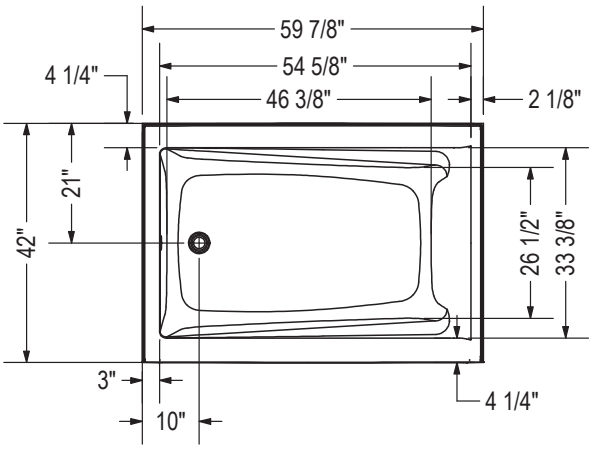

IFS Without System
Single tiling flange

IFS With System
(access panel)
Single tiling flange

1" Single integrated tiling flange (not shown)
2" Double integrated tiling flange (not shown)
Drop-in model (Shown)

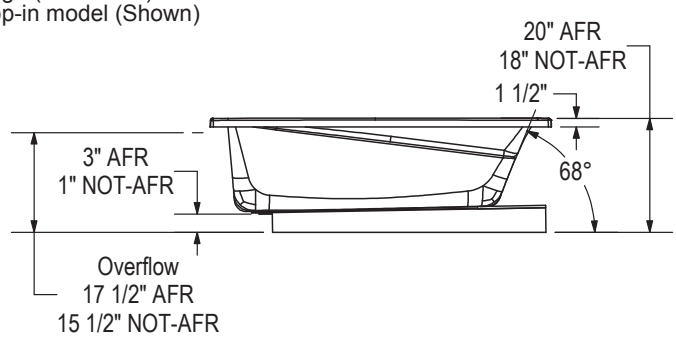

WHIRLPOOL SYSTEM

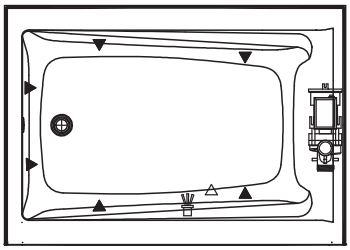

AIR SYSTEM

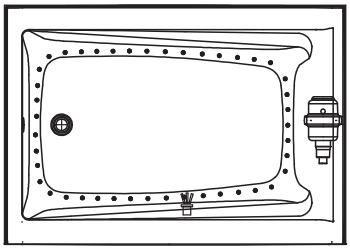

(▲) : Indicates whirlpool jets positioning
(△) : Indicates suction positioning
(●) : Indicates airjets positioning
( ) : Indicates chromatherapy light positioning

Technical drawing is universal for all Exhibit 6042 configurations.

Wood support design may vary.
Single Integrated tiling flange: 1" height x 1/4'' thickness (not shown)
Double Integrated tiling flange: 2" height (not shown)

All dimensions are approximate.
Structure measurement must be verified against the unit to ensure proper fit.

Exhibit 6632 IF

Material : Acrylic

Features

- Rectangular shape bathtub
- Alcove installation with tiling flange
- Minimalist look with discreet armrests and textured floor
- Right or left-hand drain

EXHIBIT 6632 IF - 106220

SKU	System	Color	Configuration	Dimensions & Weight	Packaging	MSRP
106220-000-001-001	Soaker - No System	White	Left Drain	65 7/8” x 32” x 18” / 75 lb	31 ft³	$ 1511
106220-000-001-002			Right Drain			$ 1511
106220-103-001-001	Aeroeffect [1 2 5]		Left Drain			$ 4524
106220-103-001-002			Right Drain			$ 4524
106220-L-001-001	Whirlpool [1 4]		Left Drain			$ 3298
106220-L-096-001	Combined Whirlpool & Aeroeffect [1 3]					$ 5823
106220-R-001-001	Whirlpool [1 4]		Right Drain			$ 3298
106220-R-096-001	Combined Whirlpool & Aeroeffect [1 3]					$ 5823

COMMON OPTIONS

SKU	Description	MSRP
OPT20137-004	Cable-operated waste and overflow (16 in. to 22 in.) (included in product packaging when purchased) Available colors: White **(001)**, Bone **(004)**, Chrome **(084)** and Brushed Nickel **(105)**	$ 362
OPT20137-084		$ 362
OPT20137-105		$ 362
OPT20137-001		$ 362
OPT10053	One chromatherapy light (factory installed) [54]	$ 790
OPT10095	Water heater assembly for whirlpool and combined systems (factory installed)	$ 1033
OPT10106-084	Metal trim kit for whirlpool and combined systems (factory installed) Available colors: Chrome **(084)** and Brushed Nickel **(105)**	$ 728
OPT10106-105		$ 728
OPT20029-105	Metal trim kit for air push control (factory installed) Available colors: Chrome **(084)** and Brushed Nickel **(105)**	$ 82
OPT20029-084		$ 82

ACCESSORIES

SKU	Description	MSRP
10006923	Flexible main hose (9 ft. extension) for air push control air massage - Kit (sold separately)	$ 209
10004306-001	White foam cushion with 2 suction pads (sold separately) Available color: White **(001)**	$ 138
10028641-084	Metal trim kit for Whirlpool and combined systems (sold separately) Available colors: Chrome **(084)** and Brushed Nickel **(105)**	$ 728
10028641-105		$ 728
10034250-084	Metal trim kit for Aeroeffect with Air Push Control (sold separately) Available colors: Chrome **(084)** and Brushed Nickel **(105)**	$ 82
10034250-105		$ 82
10022491-004	Cable-operated waste and overflow (16 in. to 22 in.) (sold separately) Available colors: White **(001)**, Bone **(004)**, Chrome **(084)** and Brushed Nickel **(105)**	$ 362

FOOTNOTES

No	Description
1	Components for standard colour units equipped with systems are colour-coordinated. Trim kit and/or air push with metallic finish can be added (additional charge applies). For non-standard colour units, please specify trim kit and/or air push colour (additional charge applies for metallic finishes). Please note that the positioning of the system's control could be in conflict with the door if one was installed on the unit. To insure compatibility, please contact customer service.
2	Please order flexible main hose 10006923 for installation of the blower further than 3 ft from the bathtub. For the Tandem models and the Serenade models (freestanding and drop-in), the blower is always remote and not factory installed so a 9 ft flexible main hose is included. Please note that the positioning of the system's control could be in conflict with the door if one was installed on the unit. To insure compatibility, please contact customer service.
3	The blower is not factory installed (remote). 9 ft flexible main hose included. Please note that the positioning of the system's control could be in conflict with the door if one was installed on the unit. To insure compatibility, please contact customer service.
4	For details on pump position and requirements, see technical drawings on https://www.maax.com. When there is a pump position A or B indicated on the technical drawing, please specify position when ordering.
5	For details on blower position and requirements, see technical drawings on https://www.maax.com. When there is a blower position A or B indicated on the technical drawing, please specify position when ordering.
54	A selection of units come with an access panel by default when equipped with a system. However, if the unit is only equipped with chromatherapy, the access panel will not be provided by default.

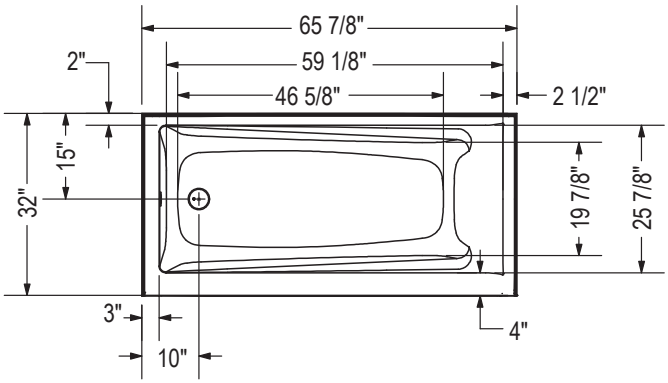

IFS Without System
Single tiling flange

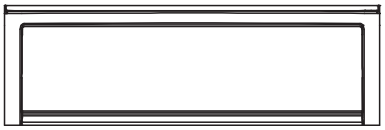

IFS With System
(access panel)
Single tiling flange

1" Single integrated tiling
flange (shown)
IFS model (shown)

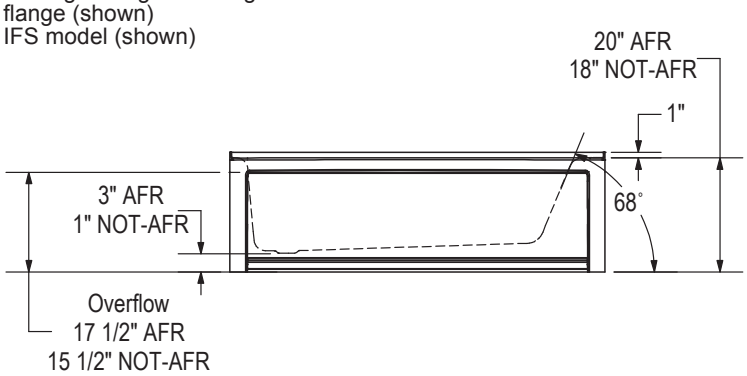

WHIRLPOOL SYSTEM

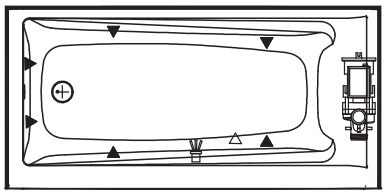

AIR SYTEM

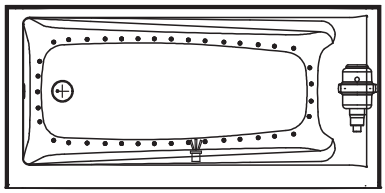

(▲) : Indicates whirlpool jets positioning
(△) : Indicates suction positioning
(●) : Indicates airjets positioning
( ) : Indicates chromatherapy light positioning

Technical drawing is universal for all Exhibit 6632 configurations.

Wood support design may vary.
Single Integrated tiling flange: 1" height x 1/4'' thickness (shown)

All dimensions are approximate.
Structure measurement must be verified against the unit to ensure proper fit.

Exhibit 6632 IF DTF

Material : Acrylic

Features

- Unique feature: minimalist look with discreet armrests
- Textured bottom
- Alcove installation
- Apron with magnetic access panel available
- Integrated double tiling flange
- Access panel available on IFS models only

EXHIBIT 6632 IF DTF - 106233

SKU	System	Color	Configuration	Dimensions & Weight	Packaging	MSRP
106233-000-001-104	Soaker - No System	White	Left Drain	65 7/8” x 32” x 18” / 75 lb	31 ft³	$ 1511
106233-000-001-105			Right Drain			$ 1511
106233-L-001-001	Whirlpool [1 4]		Left Drain			$ 3298
106233-L-096-001	Combined Whirlpool & Aeroeffect [1 3]					$ 5823
106233-L-103-001	Aeroeffect [1 2 5]					$ 4524
106233-R-001-001	Whirlpool [1 4]		Right Drain			$ 3298
106233-R-096-001	Combined Whirlpool & Aeroeffect [1 3]					$ 5823
106233-R-103-001	Aeroeffect [1 2 5]					$ 4524

COMMON OPTIONS

SKU	Description	MSRP
OPT20029-105	Metal trim kit for air push control (factory installed) Available colors: Chrome **(084)** and Brushed Nickel **(105)**	$ 82
OPT20029-084		$ 82
OPT20137-004	Cable-operated waste and overflow (16 in. to 22 in.) (included in product packaging when purchased) Available colors: White **(001)**, Bone **(004)**, Chrome **(084)** and Brushed Nickel **(105)**	$ 362
OPT20137-084		$ 362
OPT20137-105		$ 362
OPT20137-001		$ 362
OPT10019	Removable access panel	$ 419
OPT10053	One chromatherapy light (factory installed) [54]	$ 790
OPT10095	Water heater assembly for whirlpool and combined systems (factory installed)	$ 1033
OPT10106-084	Metal trim kit for whirlpool and combined systems (factory installed) Available colors: Chrome **(084)** and Brushed Nickel **(105)**	$ 728
OPT10106-105		$ 728

ACCESSORIES

SKU	Description	MSRP
10006923	Flexible main hose (9 ft. extension) for air push control air massage - Kit (sold separately)	$ 209
10004306-001	White foam cushion with 2 suction pads (sold separately) Available color: White **(001)**	$ 138
10028641-084	Metal trim kit for Whirlpool and combined systems (sold separately) Available colors: Chrome **(084)** and Brushed Nickel **(105)**	$ 728
10028641-105		$ 728
10034250-084	Metal trim kit for Aeroeffect with Air Push Control (sold separately) Available colors: Chrome **(084)** and Brushed Nickel **(105)**	$ 82
10034250-105		$ 82
10022491-004	Cable-operated waste and overflow (16 in. to 22 in.) (sold separately) Available colors: White **(001)**, Bone **(004)**, Chrome **(084)** and Brushed Nickel **(105)**	$ 362

FOOTNOTES

No	Description
1	Components for standard colour units equipped with systems are colour-coordinated. Trim kit and/or air push with metallic finish can be added (additional charge applies). For non-standard colour units, please specify trim kit and/or air push colour (additional charge applies for metallic finishes). Please note that the positioning of the system's control could be in conflict with the door if one was installed on the unit. To insure compatibility, please contact customer service.
2	Please order flexible main hose 10006923 for installation of the blower further than 3 ft from the bathtub. For the Tandem models and the Serenade models (freestanding and drop-in), the blower is always remote and not factory installed so a 9 ft flexible main hose is included. Please note that the positioning of the system's control could be in conflict with the door if one was installed on the unit. To insure compatibility, please contact customer service.
3	The blower is not factory installed (remote). 9 ft flexible main hose included. Please note that the positioning of the system's control could be in conflict with the door if one was installed on the unit. To insure compatibility, please contact customer service.
4	For details on pump position and requirements, see technical drawings on https://www.maax.com. When there is a pump position A or B indicated on the technical drawing, please specify position when ordering.
5	For details on blower position and requirements, see technical drawings on https://www.maax.com. When there is a blower position A or B indicated on the technical drawing, please specify position when ordering.
54	A selection of units come with an access panel by default when equipped with a system. However, if the unit is only equipped with chromatherapy, the access panel will not be provided by default.

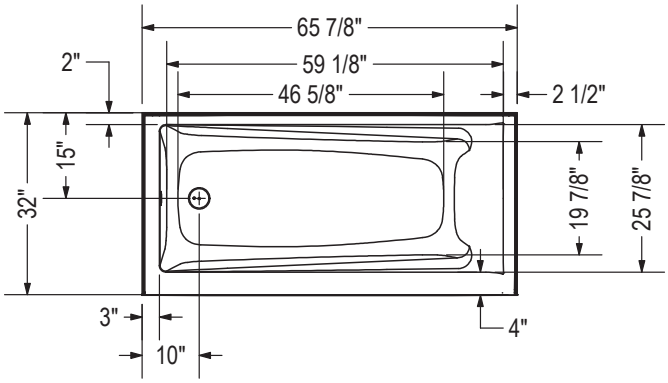

IFS Without System
Single tiling flange

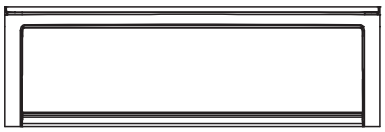

IFS With System
(access panel)
Single tiling flange

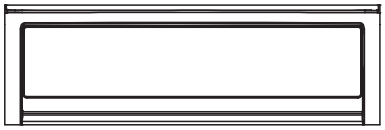

1" Single integrated tiling flange (shown)
2" Double integrated tiling flange (not shown)
IFS model (shown)

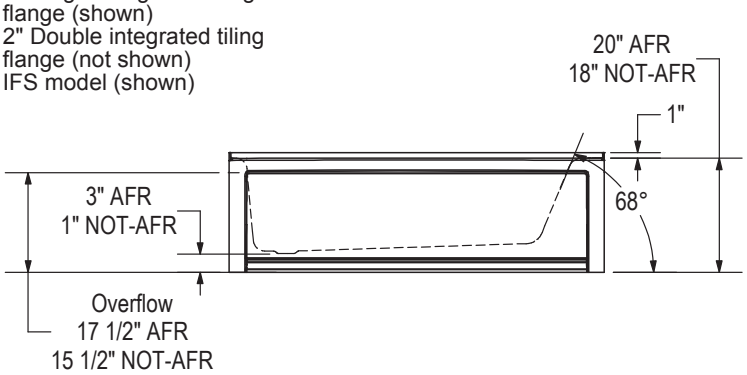

WHIRLPOOL SYSTEM

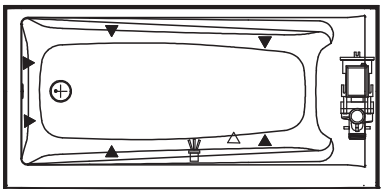

AIR SYSTEM

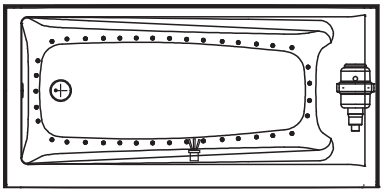

Technical drawing is universal for all Exhibit 6632 configurations.

Wood support design may vary.
Single Integrated tiling flange: 1" height x 1/4'' thickness (shown)
Double Integrated tiling flange: 2" height (not shown)

All dimensions are approximate.
Structure measurement must be verified against the unit to ensure proper fit.

(▲) : Indicates whirlpool jets positioning
(△) : Indicates suction positioning
(●) : Indicates airjets positioning
( ) : Indicates chromatherapy light positioning

Exhibit 6632 IFS

Material : Acrylic

Features

- Rectangular shape bathtub in alcove installation
- Available in Above-the-Floor Rough (AFR) or not
- Minimalist look with discreet armrests and textured floor
- Integrated tiling flange
- When equipped with a system, the unit comes with an access panel

EXHIBIT 6632 IFS - 106221

SKU	System	Color	Configuration	Dimensions & Weight	Packaging	MSRP
106221-000-001-100	Soaker - No System	White	Left Drain	65 7/8” x 32” x 18” / 88 lb	0 ft³	$ 1739
106221-000-001-101			Right Drain			$ 1739
106221-L-001-001	Whirlpool [1 4]		Left Drain			$ 3526
106221-L-096-001	Combined Whirlpool & Aeroeffect [1 3]					$ 6051
106221-L-103-001	Aeroeffect [1 2 5]					$ 4752
106221-R-001-001	Whirlpool [1 4]		Right Drain			$ 3526
106221-R-096-001	Combined Whirlpool & Aeroeffect [1 3]					$ 6051
106221-R-103-001	Aeroeffect [1 2 5]					$ 4752

EXHIBIT 6632 IFS AFR - 106222

SKU	System	Color	Configuration	Dimensions & Weight	Packaging	MSRP
106222-000-001-102	Soaker - No System	White	Left Drain	65 7/8” x 32” x 20” / 85 lb	31 ft³	$ 1739
106222-000-001-103			Right Drain			$ 1739
106222-001-001-001	Whirlpool [1 4]		Left Drain			$ 3526
106222-001-001-002			Right Drain			$ 3526
106222-L-096-001	Combined Whirlpool & Aeroeffect [1 3]		Left Drain			$ 6051
106222-L-103-001	Aeroeffect [1 2 5]					$ 4752
106222-R-096-001	Combined Whirlpool & Aeroeffect [1 3]		Right Drain			$ 6051
106222-R-103-001	Aeroeffect [1 2 5]					$ 4752

COMMON OPTIONS

SKU	Description	MSRP
OPT20029-105	Metal trim kit for air push control (factory installed) Available colors: Chrome **(084)** and Brushed Nickel **(105)**	$ 82
OPT20029-084		$ 82
OPT20137-004	Cable-operated waste and overflow (16 in. to 22 in.) (included in product packaging when purchased) Available colors: White **(001)**, Bone **(004)**, Chrome **(084)** and Brushed Nickel **(105)**	$ 362
OPT20137-084		$ 362
OPT20137-105		$ 362
OPT20137-001		$ 362
OPT10019	Removable access panel	$ 419
OPT10053	One chromatherapy light (factory installed) [54]	$ 790
OPT10095	Water heater assembly for whirlpool and combined systems (factory installed)	$ 1033
OPT10106-084	Metal trim kit for whirlpool and combined systems (factory installed) Available colors: Chrome **(084)** and Brushed Nickel **(105)**	$ 728
OPT10106-105		$ 728

ACCESSORIES

SKU	Description	MSRP
10006923	Flexible main hose (9 ft. extension) for air push control air massage - Kit (sold separately)	$ 209
10004306-001	White foam cushion with 2 suction pads (sold separately) Available color: White **(001)**	$ 138
10028641-084	Metal trim kit for Whirlpool and combined systems (sold separately) Available colors: Chrome **(084)** and Brushed Nickel **(105)**	$ 728
10028641-105		$ 728
10034250-084	Metal trim kit for Aeroeffect with Air Push Control (sold separately) Available colors: Chrome **(084)** and Brushed Nickel **(105)**	$ 82
10034250-105		$ 82
10022491-004	Cable-operated waste and overflow (16 in. to 22 in.) (sold separately) Available colors: White **(001)**, Bone **(004)**, Chrome **(084)** and Brushed Nickel **(105)**	$ 362

FOOTNOTES

No	Description
54	A selection of units come with an access panel by default when equipped with a system. However, if the unit is only equipped with chromatherapy, the access panel will not be provided by default.

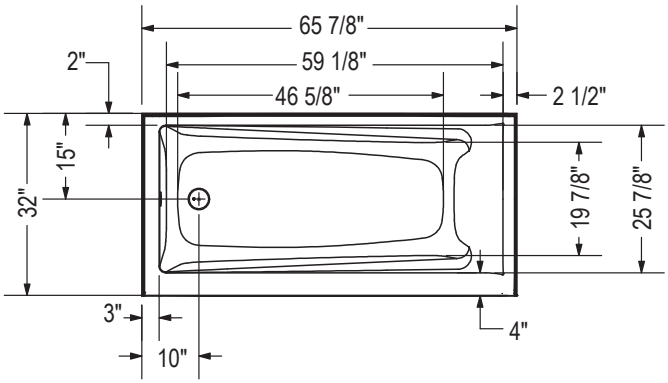

IFS Without System
Single tiling flange

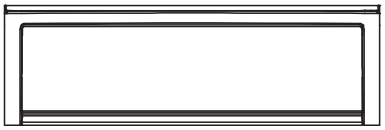

IFS With System
(access panel)
Single tiling flange

1" Single integrated tiling
flange (shown)
IFS model (shown)

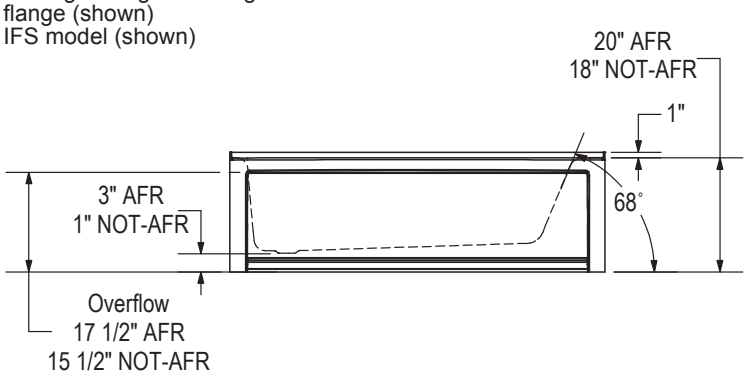

WHIRLPOOL SYSTEM

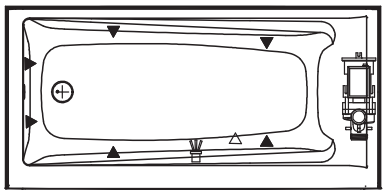

AIR SYTEM

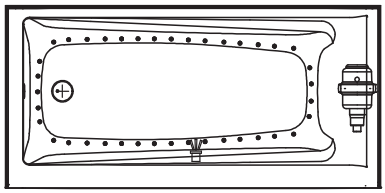

(▲) : Indicates whirlpool jets positioning
(△) : Indicates suction positioning
(●) : Indicates airjets positioning
( ) : Indicates chromatherapy light positioning

Technical drawing is universal for all Exhibit 6632 configurations.

Wood support design may vary.
Single Integrated tiling flange: 1" height x 1/4'' thickness (shown)

All dimensions are approximate.
Structure measurement must be verified against the unit to ensure proper fit.

Exhibit 6632 IFS DTF

Material : Acrylic

Features

- Rectangular shape bathtub in alcove installation
- Available in Above-the-Floor Rough (AFR) or not
- Minimalist look with discreet armrests and textured floor
- Integrated tiling flange
- When equipped with a system, the unit comes with an access panel

EXHIBIT 6632 IFS DTF - 106234

SKU	System	Color	Configuration	Dimensions & Weight	Packaging	MSRP
106234-000-001-106	Soaker - No System	White	Left Drain	65 7/8” x 32” x 18” / 85 lb	31 ft³	$ 1739
106234-000-001-107			Right Drain			$ 1739
106234-L-001-001	Whirlpool [1 4]		Left Drain			$ 3526
106234-L-096-001	Combined Whirlpool & Aeroeffect [1 3]					$ 6051
106234-L-103-001	Aeroeffect [1 2 5]					$ 4752
106234-R-001-001	Whirlpool [1 4]		Right Drain			$ 3526
106234-R-096-001	Combined Whirlpool & Aeroeffect [1 3]					$ 6051
106234-R-103-001	Aeroeffect [1 2 5]					$ 4752

EXHIBIT 6632 IFS AFR DTF - 106235

SKU	System	Color	Configuration	Dimensions & Weight	Packaging	MSRP
106235-000-001-108	Soaker - No System	White	Left Drain	65 7/8” x 32” x 20” / 85 lb	31 ft³	$ 1739
106235-000-001-109			Right Drain			$ 1739
106235-L-001-001	Whirlpool [1 4]		Left Drain			$ 3526
106235-L-096-001	Combined Whirlpool & Aeroeffect [1 3]					$ 6051
106235-L-103-001	Aeroeffect [1 2 5]					$ 4752
106235-R-001-001	Whirlpool [1 4]		Right Drain			$ 3526
106235-R-096-001	Combined Whirlpool & Aeroeffect [1 3]					$ 6051
106235-R-103-001	Aeroeffect [1 2 5]					$ 4752

COMMON OPTIONS

SKU	Description	MSRP
OPT20029-105	Metal trim kit for air push control (factory installed) Available colors: Chrome **(084)** and Brushed Nickel **(105)**	$ 82
OPT20029-084		$ 82
OPT20137-004	Cable-operated waste and overflow (16 in. to 22 in.) (included in product packaging when purchased) Available colors: White **(001)**, Bone **(004)**, Chrome **(084)** and Brushed Nickel **(105)**	$ 362
OPT20137-084		$ 362
OPT20137-105		$ 362
OPT20137-001		$ 362
OPT10019	Removable access panel	$ 419
OPT10053	One chromatherapy light (factory installed) [54]	$ 790
OPT10095	Water heater assembly for whirlpool and combined systems (factory installed)	$ 1033
OPT10106-084	Metal trim kit for whirlpool and combined systems (factory installed) Available colors: Chrome **(084)** and Brushed Nickel **(105)**	$ 728
OPT10106-105		$ 728

ACCESSORIES

SKU	Description	MSRP
10006923	Flexible main hose (9 ft. extension) for air push control air massage - Kit (sold separately)	$ 209
10004306-001	White foam cushion with 2 suction pads (sold separately) Available color: White **(001)**	$ 138
10028641-084	Metal trim kit for Whirlpool and combined systems (sold separately) Available colors: Chrome **(084)** and Brushed Nickel **(105)**	$ 728
10028641-105		$ 728
10034250-084	Metal trim kit for Aeroeffect with Air Push Control (sold separately) Available colors: Chrome **(084)** and Brushed Nickel **(105)**	$ 82
10034250-105		$ 82
10022491-004	Cable-operated waste and overflow (16 in. to 22 in.) (sold separately) Available colors: White **(001)**, Bone **(004)**, Chrome **(084)** and Brushed Nickel **(105)**	$ 362

FOOTNOTES

No	Description
54	A selection of units come with an access panel by default when equipped with a system. However, if the unit is only equipped with chromatherapy, the access panel will not be provided by default.

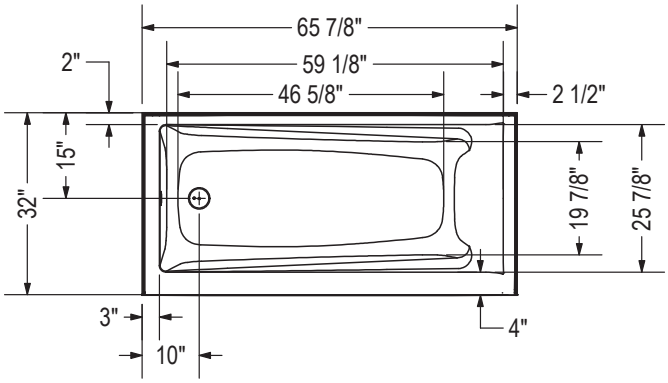

IFS Without System
Single tiling flange

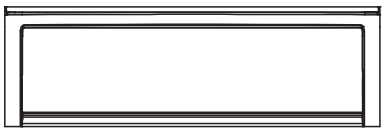

IFS With System
(access panel)
Single tiling flange

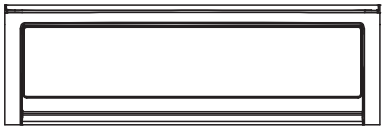

1" Single integrated tiling flange (shown)
2" Double integrated tiling flange (not shown)
IFS model (shown)

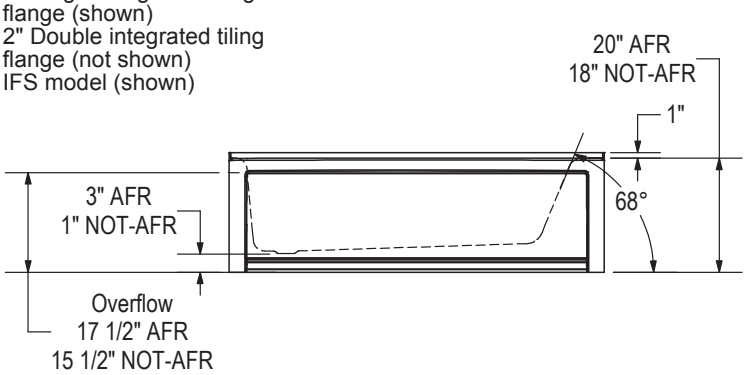

WHIRLPOOL SYSTEM

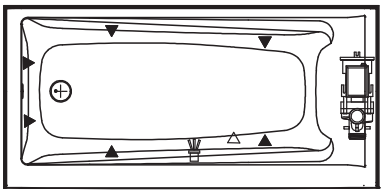

AIR SYSTEM

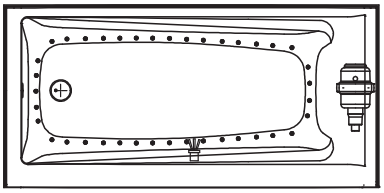

(▲) : Indicates whirlpool jets positioning
(△) : Indicates suction positioning
(●) : Indicates airjets positioning
( ) : Indicates chromatherapy light positioning

Technical drawing is universal for all Exhibit 6632 configurations.

Wood support design may vary.
Single Integrated tiling flange: 1" height x 1/4'' thickness (shown)
Double Integrated tiling flange: 2" height (not shown)

All dimensions are approximate.
Structure measurement must be verified against the unit to ensure proper fit.

Exhibit 6634

Material : Acrylic

Features

- Rectangular shape bathtub
- Drop-in installation
- Minimalist look with discreet armrests and textured floor
- End drain

EXHIBIT 6634 - 106219

SKU	System	Color	Configuration	Dimensions & Weight	Packaging	MSRP
106219-000-001-000	Soaker - No System	White	End Drain	65 7/8” x 34” x 18” / 75 lb	31 ft^3	$ 1511
106219-001-001-100	Whirlpool [1 4]					$ 3298
106219-002-001-000	Multi-Pack [9]					$ 7200
106219-096-001	Combined Whirlpool & Aeroeffect [1 3]					$ 5823
106219-103-001	Aeroeffect [1 2 5]					$ 4524

COMMON OPTIONS

SKU	Description	MSRP
OPT20137-004	Cable-operated waste and overflow (16 in. to 22 in.) (included in product packaging when purchased) Available colors: White **(001)**, Bone **(004)**, Chrome **(084)** and Brushed Nickel **(105)**	$ 362
OPT20137-084		$ 362
OPT20137-105		$ 362
OPT20137-001		$ 362
OPT10053	One chromatherapy light (factory installed) [54]	$ 790
OPT10095	Water heater assembly for whirlpool and combined systems (factory installed)	$ 1033
OPT10106-084	Metal trim kit for whirlpool and combined systems (factory installed) Available colors: Chrome **(084)** and Brushed Nickel **(105)**	$ 728
OPT10106-105		$ 728
OPT20029-105	Metal trim kit for air push control (factory installed) Available colors: Chrome **(084)** and Brushed Nickel **(105)**	$ 82
OPT20029-084		$ 82

ACCESSORIES

SKU	Description	MSRP
10006923	Flexible main hose (9 ft. extension) for air push control air massage - Kit (sold separately)	$ 209
10004306-001	White foam cushion with 2 suction pads (sold separately) Available color: White **(001)**	$ 138
10028641-084	Metal trim kit for Whirlpool and combined systems (sold separately) Available colors: Chrome **(084)** and Brushed Nickel **(105)**	$ 728
10028641-105		$ 728
10034250-084	Metal trim kit for Aeroeffect with Air Push Control (sold separately) Available colors: Chrome **(084)** and Brushed Nickel **(105)**	$ 82
10034250-105		$ 82
10022491-004	Cable-operated waste and overflow (16 in. to 22 in.) (sold separately) Available colors: White **(001)**, Bone **(004)**, Chrome **(084)** and Brushed Nickel **(105)**	$ 362

FOOTNOTES

No	Description
1	Components for standard colour units equipped with systems are colour-coordinated. Trim kit and/or air push with metallic finish can be added (additional charge applies). For non-standard colour units, please specify trim kit and/or air push colour (additional charge applies for metallic finishes). Please note that the positioning of the system’s control could be in conflict with the door if one was installed on the unit. To insure compatibility, please contact customer service.

FOOTNOTES

No	Description
2	Please order flexible main hose 10006923 for installation of the blower further than 3 ft from the bathtub. For the Tandem models and the Serenade models (freestanding and drop-in), the blower is always remote and not factory installed so a 9 ft flexible main hose is included. Please note that the positioning of the system's control could be in conflict with the door if one was installed on the unit. To insure compatibility, please contact customer service.
3	The blower is not factory installed (remote). 9 ft flexible main hose included. Please note that the positioning of the system's control could be in conflict with the door if one was installed on the unit. To insure compatibility, please contact customer service.
4	For details on pump position and requirements, see technical drawings on https://www.maax.com. When there is a pump position A or B indicated on the technical drawing, please specify position when ordering.
5	For details on blower position and requirements, see technical drawings on https://www.maax.com. When there is a blower position A or B indicated on the technical drawing, please specify position when ordering.
54	A selection of units come with an access panel by default when equipped with a system. However, if the unit is only equipped with chromatherapy, the access panel will not be provided by default.

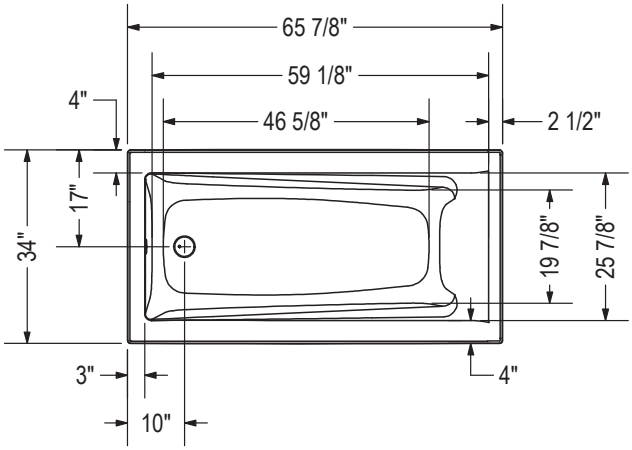

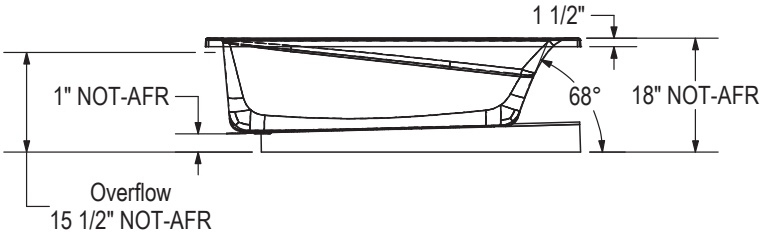

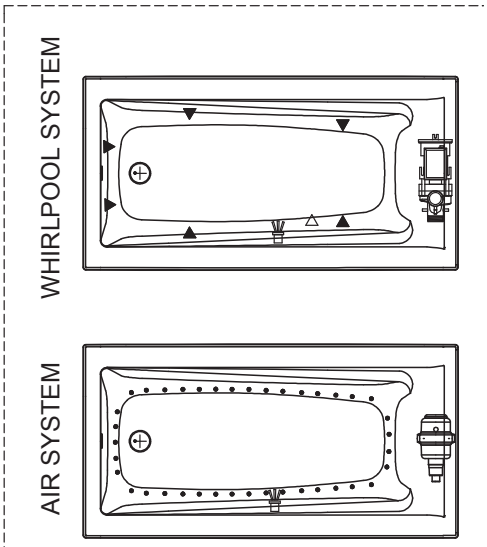

(▲) : Indicates whirlpool jets positioning
(△) : Indicates suction positioning
(●) : Indicates airjets positioning
( ) : Indicates chromatherapy light positioning

All dimensions are approximate.
Structure measurement must be verified against the unit to ensure proper fit.

Exhibit 6636

Material : Acrylic

Features

- Rectangular shape bathtub
- Drop-in or alcove installation with tiling flange
- Minimalist look with discreet armrests and textured floor
- End drain

EXHIBIT 6636 - 106177

SKU	System	Color	Configuration	Dimensions & Weight	Packaging	MSRP
106177-000-001-000	Soaker - No System	White	End Drain	65 7/8” x 36” x 18” / 78 lb	35 ft^3	$ 1529
106177-001-001-000	Whirlpool [1 4]					$ 3316
106177-002-001-100	Multi-Pack [9]					$ 6880
106177-096-001	Combined Whirlpool & Aeroeffect [1 3]					$ 5841
106177-103-001-000	Aeroeffect [1 2 5]					$ 4542

COMMON OPTIONS

SKU	Description	MSRP
OPT20137-004	Cable-operated waste and overflow (16 in. to 22 in.) (included in product packaging when purchased) Available colors: White **(001)**, Bone **(004)**, Chrome **(084)** and Brushed Nickel **(105)**	$ 362
OPT20137-084		$ 362
OPT20137-105		$ 362
OPT20137-001		$ 362
OPT10053	One chromatherapy light (factory installed) [54]	$ 790
OPT10095	Water heater assembly for whirlpool and combined systems (factory installed)	$ 1033
OPT10106-084	Metal trim kit for whirlpool and combined systems (factory installed) Available colors: Chrome **(084)** and Brushed Nickel **(105)**	$ 728
OPT10106-105		$ 728
OPT20029-105	Metal trim kit for air push control (factory installed) Available colors: Chrome **(084)** and Brushed Nickel **(105)**	$ 82
OPT20029-084		$ 82

ACCESSORIES

SKU	Description	MSRP
10006923	Flexible main hose (9 ft. extension) for air push control air massage - Kit (sold separately)	$ 209
10004306-001	White foam cushion with 2 suction pads (sold separately) Available color: White **(001)**	$ 138
10028641-084	Metal trim kit for Whirlpool and combined systems (sold separately) Available colors: Chrome **(084)** and Brushed Nickel **(105)**	$ 728
10028641-105		$ 728
10034250-084	Metal trim kit for Aeroeffect with Air Push Control (sold separately) Available colors: Chrome **(084)** and Brushed Nickel **(105)**	$ 82
10034250-105		$ 82
10022491-004	Cable-operated waste and overflow (16 in. to 22 in.) (sold separately) Available colors: White **(001)**, Bone **(004)**, Chrome **(084)** and Brushed Nickel **(105)**	$ 362

FOOTNOTES

No	Description
1	Components for standard colour units equipped with systems are colour-coordinated. Trim kit and/or air push with metallic finish can be added (additional charge applies). For non-standard colour units, please specify trim kit and/or air push colour (additional charge applies for metallic finishes). Please note that the positioning of the system’s control could be in conflict with the door if one was installed on the unit. To insure compatibility, please contact customer service.

FOOTNOTES

No	Description
2	Please order flexible main hose 10006923 for installation of the blower further than 3 ft from the bathtub. For the Tandem models and the Serenade models (freestanding and drop-in), the blower is always remote and not factory installed so a 9 ft flexible main hose is included. Please note that the positioning of the system's control could be in conflict with the door if one was installed on the unit. To insure compatibility, please contact customer service.
4	For details on pump position and requirements, see technical drawings on https://www.maax.com. When there is a pump position A or B indicated on the technical drawing, please specify position when ordering.
5	For details on blower position and requirements, see technical drawings on https://www.maax.com. When there is a blower position A or B indicated on the technical drawing, please specify position when ordering.
54	A selection of units come with an access panel by default when equipped with a system. However, if the unit is only equipped with chromatherapy, the access panel will not be provided by default.

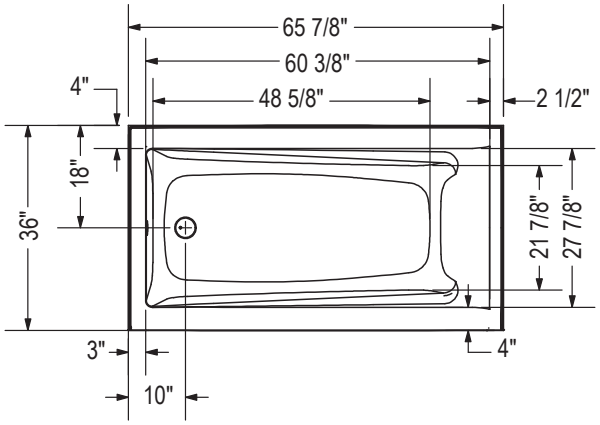

IFS Without System
Single tiling flange

IFS With System
(access panel)
Single tiling flange

1" Single integrated tiling
flange (not shown)
Drop-in model (Shown)

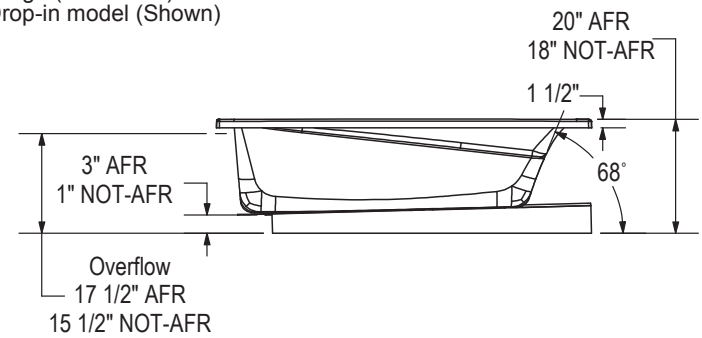

WHIRLPOOL SYSTEM

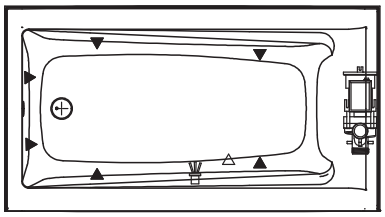

AIR SYTEM

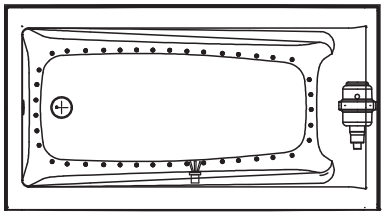

(▲) : Indicates whirlpool jets positioning
(△) : Indicates suction positioning
(●) : Indicates airjets positioning
( ) : Indicates chromatherapy light positioning

Technical drawing is universal for all Exhibit 6636 configurations.

Wood support design may vary.
Single Integrated tiling flange: 1" height x 1/4'' thickness (not shown)

All dimensions are approximate.
Structure measurement must be verified against the unit to ensure proper fit.

Exhibit 6636 IF

Material : Acrylic

Features

- Rectangular shape bathtub
- Drop-in or alcove installation with tiling flange
- Minimalist look with discreet armrests and textured floor
- End drain

EXHIBIT 6636 IF - 106178

SKU	System	Color	Configuration	Dimensions & Weight	Packaging	MSRP
106178-000-001-001	Soaker - No System	White	Left Drain	65 7/8” x 36” x 20” / 88 lb	0 ft³	$ 1529
106178-000-001-002			Right Drain			$ 1529
106178-002-001-101	Multi-Pack [9]		Left Drain			$ 6880
106178-002-001-102			Right Drain			$ 6880
106178-L-001-001	Whirlpool [1 4]		Left Drain			$ 3316
106178-L-096-001	Combined Whirlpool & Aeroeffect [1 3]					$ 5841
106178-L-103-001	Aeroeffect [1 2 5]					$ 4542
106178-R-001-001	Whirlpool [1 4]		Right Drain			$ 3316
106178-R-096-001	Combined Whirlpool & Aeroeffect [1 3]					$ 5841
106178-R-103-001	Aeroeffect [1 2 5]					$ 4542

COMMON OPTIONS

SKU	Description	MSRP
OPT20137-004	Cable-operated waste and overflow (16 in. to 22 in.) (included in product packaging when purchased) Available colors: White **(001)**, Bone **(004)**, Chrome **(084)** and Brushed Nickel **(105)**	$ 362
OPT20137-084		$ 362
OPT20137-105		$ 362
OPT20137-001		$ 362
OPT10053	One chromatherapy light (factory installed) [54]	$ 790
OPT10095	Water heater assembly for whirlpool and combined systems (factory installed)	$ 1033
OPT10106-084	Metal trim kit for whirlpool and combined systems (factory installed) Available colors: Chrome **(084)** and Brushed Nickel **(105)**	$ 728
OPT10106-105		$ 728
OPT20029-105	Metal trim kit for air push control (factory installed) Available colors: Chrome **(084)** and Brushed Nickel **(105)**	$ 82
OPT20029-084		$ 82

ACCESSORIES

SKU	Description	MSRP
10006923	Flexible main hose (9 ft. extension) for air push control air massage - Kit (sold separately)	$ 209
10004306-001	White foam cushion with 2 suction pads (sold separately) Available color: White **(001)**	$ 138
10028641-084	Metal trim kit for Whirlpool and combined systems (sold separately) Available colors: Chrome **(084)** and Brushed Nickel **(105)**	$ 728
10028641-105		$ 728
10034250-084	Metal trim kit for Aeroeffect with Air Push Control (sold separately) Available colors: Chrome **(084)** and Brushed Nickel **(105)**	$ 82
10034250-105		$ 82
10022491-004	Cable-operated waste and overflow (16 in. to 22 in.) (sold separately) Available colors: White **(001)**, Bone **(004)**, Chrome **(084)** and Brushed Nickel **(105)**	$ 362

FOOTNOTES

No	Description
1	Components for standard colour units equipped with systems are colour-coordinated. Trim kit and/or air push with metallic finish can be added (additional charge applies). For non-standard colour units, please specify trim kit and/or air push colour (additional charge applies for metallic finishes). Please note that the positioning of the system's control could be in conflict with the door if one was installed on the unit. To insure compatibility, please contact customer service.
2	Please order flexible main hose 10006923 for installation of the blower further than 3 ft from the bathtub. For the Tandem models and the Serenade models (freestanding and drop-in), the blower is always remote and not factory installed so a 9 ft flexible main hose is included. Please note that the positioning of the system's control could be in conflict with the door if one was installed on the unit. To insure compatibility, please contact customer service.
3	The blower is not factory installed (remote). 9 ft flexible main hose included. Please note that the positioning of the system's control could be in conflict with the door if one was installed on the unit. To insure compatibility, please contact customer service.
4	For details on pump position and requirements, see technical drawings on https://www.maax.com. When there is a pump position A or B indicated on the technical drawing, please specify position when ordering.
5	For details on blower position and requirements, see technical drawings on https://www.maax.com. When there is a blower position A or B indicated on the technical drawing, please specify position when ordering.
54	A selection of units come with an access panel by default when equipped with a system. However, if the unit is only equipped with chromatherapy, the access panel will not be provided by default.

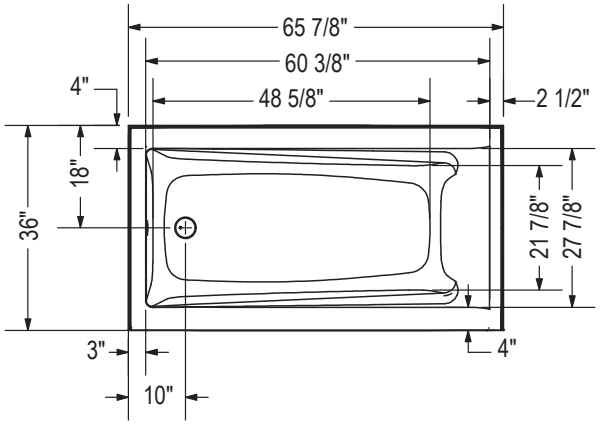

IFS Without System
Single tiling flange

IFS With System
(access panel)
Single tiling flange

1" Single integrated tiling
flange (not shown)
Drop-in model (Shown)

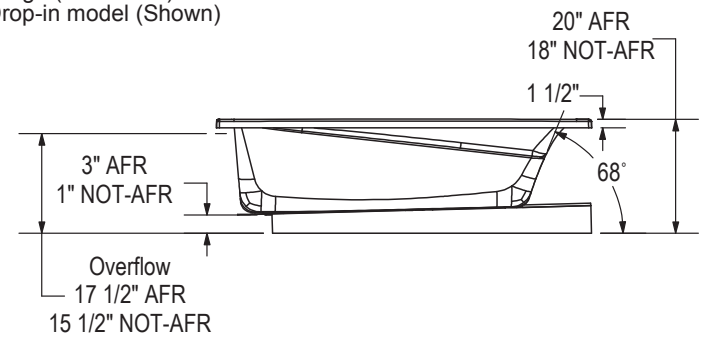

WHIRLPOOL SYSTEM

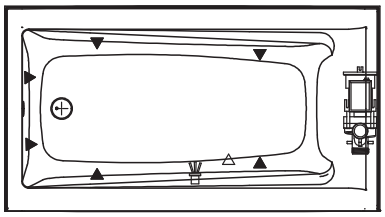

AIR SYTEM

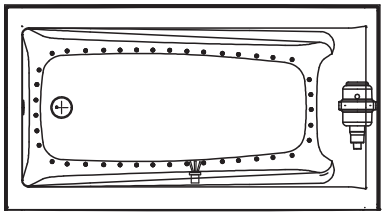

(▲) : Indicates whirlpool jets positioning
(△) : Indicates suction positioning
(●) : Indicates airjets positioning
( ) : Indicates chromatherapy light positioning

Technical drawing is universal for all Exhibit 6636 configurations.

Wood support design may vary.
Single Integrated tiling flange: 1" height x 1/4'' thickness (not shown)

All dimensions are approximate.
Structure measurement must be verified against the unit to ensure proper fit.

Exhibit 6636 IF DTF

Material : Acrylic

Features

- Unique feature: minimalist look with discreet armrests
- Textured bottom
- Alcove installation
- Apron with magnetic access panel available
- Integrated double tiling flange
- Access panel available on IFS models only

EXHIBIT 6636 IF DTF - 106236

SKU	System	Color	Configuration	Dimensions & Weight	Packaging	MSRP
106236-000-001-104	Soaker - No System	White	Left Drain	65 7/8” x 36” x 18” / 78 lb	35 ft³	$ 1529
106236-000-001-105			Right Drain			$ 1529
106236-L-001-001	Whirlpool [1 4]		Left Drain			$ 3316
106236-L-096-001	Combined Whirlpool & Aeroeffect [1 3]					$ 5841
106236-L-103-001	Aeroeffect [1 2 5]					$ 4542
106236-R-001-001	Whirlpool [1 4]		Right Drain			$ 3316
106236-R-096-001	Combined Whirlpool & Aeroeffect [1 3]					$ 5841
106236-R-103-001	Aeroeffect [1 2 5]					$ 4542

COMMON OPTIONS

SKU	Description	MSRP
OPT20029-105	Metal trim kit for air push control (factory installed) Available colors: Chrome **(084)** and Brushed Nickel **(105)**	$ 82
OPT20029-084		$ 82
OPT20137-004	Cable-operated waste and overflow (16 in. to 22 in.) (included in product packaging when purchased) Available colors: White **(001)**, Bone **(004)**, Chrome **(084)** and Brushed Nickel **(105)**	$ 362
OPT20137-084		$ 362
OPT20137-105		$ 362
OPT20137-001		$ 362
OPT10019	Removable access panel	$ 419
OPT10053	One chromatherapy light (factory installed) [54]	$ 790
OPT10095	Water heater assembly for whirlpool and combined systems (factory installed)	$ 1033
OPT10106-084	Metal trim kit for whirlpool and combined systems (factory installed) Available colors: Chrome **(084)** and Brushed Nickel **(105)**	$ 728
OPT10106-105		$ 728

ACCESSORIES

SKU	Description	MSRP
10006923	Flexible main hose (9 ft. extension) for air push control air massage - Kit (sold separately)	$ 209
10004306-001	White foam cushion with 2 suction pads (sold separately) Available color: White **(001)**	$ 138
10028641-084	Metal trim kit for Whirlpool and combined systems (sold separately) Available colors: Chrome **(084)** and Brushed Nickel **(105)**	$ 728
10028641-105		$ 728
10034250-084	Metal trim kit for Aeroeffect with Air Push Control (sold separately) Available colors: Chrome **(084)** and Brushed Nickel **(105)**	$ 82
10034250-105		$ 82
10022491-004	Cable-operated waste and overflow (16 in. to 22 in.) (sold separately) Available colors: White **(001)**, Bone **(004)**, Chrome **(084)** and Brushed Nickel **(105)**	$ 362

FOOTNOTES

No	Description
1	Components for standard colour units equipped with systems are colour-coordinated. Trim kit and/or air push with metallic finish can be added (additional charge applies). For non-standard colour units, please specify trim kit and/or air push colour (additional charge applies for metallic finishes). Please note that the positioning of the system's control could be in conflict with the door if one was installed on the unit. To insure compatibility, please contact customer service.
2	Please order flexible main hose 10006923 for installation of the blower further than 3 ft from the bathtub. For the Tandem models and the Serenade models (freestanding and drop-in), the blower is always remote and not factory installed so a 9 ft flexible main hose is included. Please note that the positioning of the system's control could be in conflict with the door if one was installed on the unit. To insure compatibility, please contact customer service.
3	The blower is not factory installed (remote). 9 ft flexible main hose included. Please note that the positioning of the system's control could be in conflict with the door if one was installed on the unit. To insure compatibility, please contact customer service.
4	For details on pump position and requirements, see technical drawings on https://www.maax.com. When there is a pump position A or B indicated on the technical drawing, please specify position when ordering.
5	For details on blower position and requirements, see technical drawings on https://www.maax.com. When there is a blower position A or B indicated on the technical drawing, please specify position when ordering.
54	A selection of units come with an access panel by default when equipped with a system. However, if the unit is only equipped with chromatherapy, the access panel will not be provided by default.

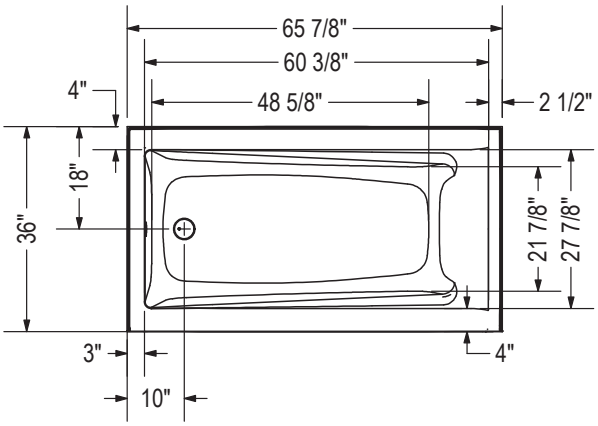

IFS Without System
Single tiling flange

IFS With System
(access panel)
Single tiling flange

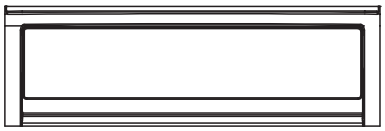

1" Single integrated tiling flange (not shown)
2" Double integrated tiling flange (not shown)
Drop-in model (Shown)

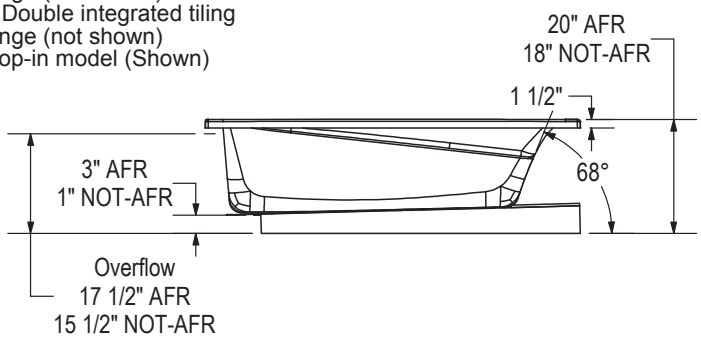

WHIRLPOOL SYSTEM

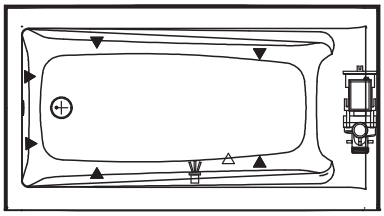

AIR SYSTEM

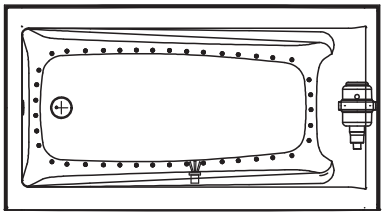

(▲) : Indicates whirlpool jets positioning
(△) : Indicates suction positioning
(●) : Indicates airjets positioning
( ) : Indicates chromatherapy light positioning

Technical drawing is universal for all Exhibit 6636 configurations.

Wood support design may vary.
Single Integrated tiling flange: 1" height x 1/4'' thickness (not shown)
Double Integrated tiling flange: 2" height (not shown)

All dimensions are approximate.
Structure measurement must be verified against the unit to ensure proper fit.

Exhibit 6636 IFS

Material : Acrylic

Features

- Rectangular shape bathtub in alcove installation
- Available in Above-the-Floor Rough (AFR) or not
- Minimalist look with discreet armrests and textured floor
- Integrated tiling flange
- When equipped with a system, the unit comes with an access panel

EXHIBIT 6636 IFS - 106179

SKU	System	Color	Configuration	Dimensions & Weight	Packaging	MSRP
106179-000-001-100	Soaker - No System	White	Left Drain	65 7/8” x 36” x 18” / 88 lb	35 ft³	$ 1795
106179-000-001-101			Right Drain			$ 1795
106179-L-001-001	Whirlpool [1 4]		Left Drain			$ 3582
106179-L-096-001	Combined Whirlpool & Aeroeffect [1 3]					$ 6107
106179-L-103-001	Aeroeffect [1 2 5]					$ 4808
106179-R-001-001	Whirlpool [1 4]		Right Drain			$ 3582
106179-R-096-001	Combined Whirlpool & Aeroeffect [1 3]					$ 6107
106179-R-103-001	Aeroeffect [1 2 5]					$ 4808

EXHIBIT 6636 IFS AFR - 106180

SKU	System	Color	Configuration	Dimensions & Weight	Packaging	MSRP
106180-000-001-102	Soaker - No System	White	Left Drain	65 7/8” x 36” x 20” / 88 lb	35 ft³	$ 1795
106180-000-001-103			Right Drain			$ 1795
106180-001-001-001	Whirlpool [1 4]		Left Drain			$ 3582
106180-001-001-002			Right Drain			$ 3582
106180-L-096-001	Combined Whirlpool & Aeroeffect [1 3]		Left Drain			$ 6107
106180-L-103-001	Aeroeffect [1 2 5]					$ 4808
106180-R-096-001	Combined Whirlpool & Aeroeffect [1 3]		Right Drain			$ 6107
106180-R-103-001	Aeroeffect [1 2 5]					$ 4808

COMMON OPTIONS

SKU	Description	MSRP
OPT20029-105	Metal trim kit for air push control (factory installed) Available colors: Chrome **(084)** and Brushed Nickel **(105)**	$ 82
OPT20029-084		$ 82
OPT20137-004	Cable-operated waste and overflow (16 in. to 22 in.) (included in product packaging when purchased) Available colors: White **(001)**, Bone **(004)**, Chrome **(084)** and Brushed Nickel **(105)**	$ 362
OPT20137-084		$ 362
OPT20137-105		$ 362
OPT20137-001		$ 362
OPT10019	Removable access panel	$ 419
OPT10053	One chromatherapy light (factory installed) [54]	$ 790
OPT10095	Water heater assembly for whirlpool and combined systems (factory installed)	$ 1033
OPT10106-084	Metal trim kit for whirlpool and combined systems (factory installed) Available colors: Chrome **(084)** and Brushed Nickel **(105)**	$ 728
OPT10106-105		$ 728

ACCESSORIES

SKU	Description	MSRP
10006923	Flexible main hose (9 ft. extension) for air push control air massage - Kit (sold separately)	$ 209
10004306-001	White foam cushion with 2 suction pads (sold separately) Available color: White **(001)**	$ 138
10028641-084	Metal trim kit for Whirlpool and combined systems (sold separately) Available colors: Chrome **(084)** and Brushed Nickel **(105)**	$ 728
10028641-105		$ 728
10034250-084	Metal trim kit for Aeroeffect with Air Push Control (sold separately) Available colors: Chrome **(084)** and Brushed Nickel **(105)**	$ 82
10034250-105		$ 82
10022491-004	Cable-operated waste and overflow (16 in. to 22 in.) (sold separately) Available colors: White **(001)**, Bone **(004)**, Chrome **(084)** and Brushed Nickel **(105)**	$ 362

FOOTNOTES

No	Description
1	Components for standard colour units equipped with systems are colour-coordinated. Trim kit and/or air push with metallic finish can be added (additional charge applies). For non-standard colour units, please specify trim kit and/or air push colour (additional charge applies for metallic finishes). Please note that the positioning of the system's control could be in conflict with the door if one was installed on the unit. To insure compatibility, please contact customer service.
2	Please order flexible main hose 10006923 for installation of the blower further than 3 ft from the bathtub. For the Tandem models and the Serenade models (freestanding and drop-in), the blower is always remote and not factory installed so a 9 ft flexible main hose is included. Please note that the positioning of the system's control could be in conflict with the door if one was installed on the unit. To insure compatibility, please contact customer service.
3	The blower is not factory installed (remote). 9 ft flexible main hose included. Please note that the positioning of the system's control could be in conflict with the door if one was installed on the unit. To insure compatibility, please contact customer service.
4	For details on pump position and requirements, see technical drawings on https://www.maax.com. When there is a pump position A or B indicated on the technical drawing, please specify position when ordering.
5	For details on blower position and requirements, see technical drawings on https://www.maax.com. When there is a blower position A or B indicated on the technical drawing, please specify position when ordering.
54	A selection of units come with an access panel by default when equipped with a system. However, if the unit is only equipped with chromatherapy, the access panel will not be provided by default.

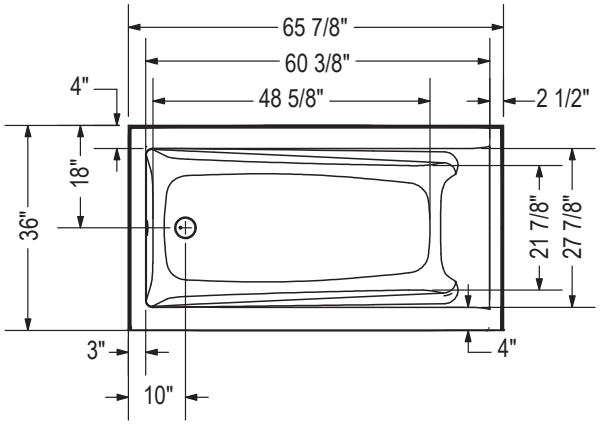

IFS Without System
Single tiling flange

IFS With System
(access panel)
Single tiling flange

1" Single integrated tiling
flange (not shown)
Drop-in model (Shown)

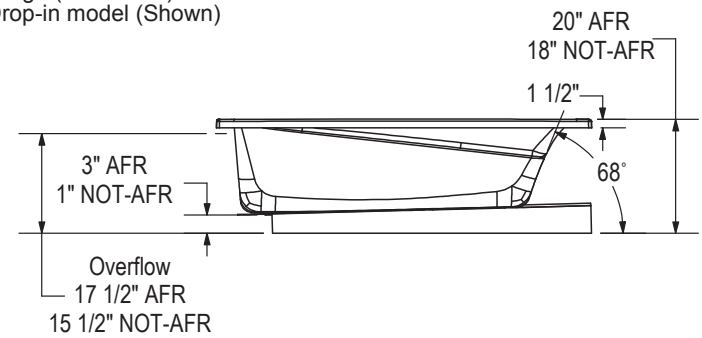

WHIRLPOOL SYSTEM

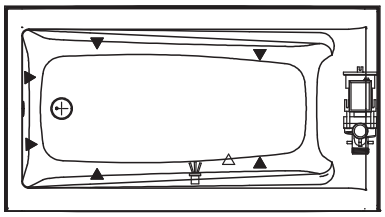

AIR SYTEM

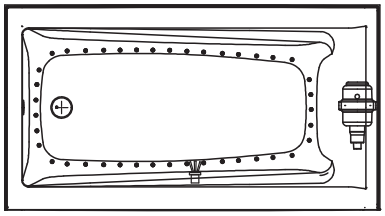

(▲) : Indicates whirlpool jets positioning
(△) : Indicates suction positioning
(●) : Indicates airjets positioning
( ) : Indicates chromatherapy light positioning

Technical drawing is universal for all Exhibit 6636 configurations.

Wood support design may vary.
Single Integrated tiling flange: 1" height x 1/4'' thickness (not shown)

All dimensions are approximate.
Structure measurement must be verified against the unit to ensure proper fit.

Exhibit 6636 IFS DTF

Material : Acrylic

Features

- Rectangular shape bathtub in alcove installation
- Available in Above-the-Floor Rough (AFR) or not
- Minimalist look with discreet armrests and textured floor
- Integrated tiling flange
- When equipped with a system, the unit comes with an access panel

EXHIBIT 6636 IFS DTF - 106237

SKU	System	Color	Configuration	Dimensions & Weight	Packaging	MSRP
106237-000-001-106	Soaker - No System	White	Left Drain	65 7/8” x 36” x 18” / 88 lb	35 ft³	$ 1795
106237-000-001-107			Right Drain			$ 1795
106237-L-001-001	Whirlpool [1 4]		Left Drain			$ 3582
106237-L-096-001	Combined Whirlpool & Aeroeffect [1 3]					$ 6107
106237-L-103-001	Aeroeffect [1 2 5]					$ 4808
106237-R-001-001	Whirlpool [1 4]		Right Drain			$ 3582
106237-R-096-001	Combined Whirlpool & Aeroeffect [1 3]					$ 6107
106237-R-103-001	Aeroeffect [1 2 5]					$ 4808

EXHIBIT 6636 IFS AFR DTF - 106238

SKU	System	Color	Configuration	Dimensions & Weight	Packaging	MSRP
106238-000-001-108	Soaker - No System	White	Left Drain	65 7/8” x 36” x 20” / 88 lb	35 ft³	$ 1795
106238-000-001-109			Right Drain			$ 1795
106238-L-001-001	Whirlpool [1 4]		Left Drain			$ 3582
106238-L-096-001	Combined Whirlpool & Aeroeffect [1 3]					$ 6107
106238-L-103-001	Aeroeffect [1 2 5]					$ 4808
106238-R-001-001	Whirlpool [1 4]		Right Drain			$ 3582
106238-R-096-001	Combined Whirlpool & Aeroeffect [1 3]					$ 6107
106238-R-103-001	Aeroeffect [1 2 5]					$ 4808

COMMON OPTIONS

SKU	Description	MSRP
OPT20029-105	Metal trim kit for air push control (factory installed) Available colors: Chrome **(084)** and Brushed Nickel **(105)**	$ 82
OPT20029-084		$ 82
OPT20137-004	Cable-operated waste and overflow (16 in. to 22 in.) (included in product packaging when purchased) Available colors: White **(001)**, Bone **(004)**, Chrome **(084)** and Brushed Nickel **(105)**	$ 362
OPT20137-084		$ 362
OPT20137-105		$ 362
OPT20137-001		$ 362
OPT10019	Removable access panel	$ 419
OPT10053	One chromatherapy light (factory installed) [54]	$ 790
OPT10095	Water heater assembly for whirlpool and combined systems (factory installed)	$ 1033
OPT10106-084	Metal trim kit for whirlpool and combined systems (factory installed) Available colors: Chrome **(084)** and Brushed Nickel **(105)**	$ 728
OPT10106-105		$ 728

ACCESSORIES

SKU	Description	MSRP
10006923	Flexible main hose (9 ft. extension) for air push control air massage - Kit (sold separately)	$ 209
10004306-001	White foam cushion with 2 suction pads (sold separately) Available color: White **(001)**	$ 138
10028641-084	Metal trim kit for Whirlpool and combined systems (sold separately) Available colors: Chrome **(084)** and Brushed Nickel **(105)**	$ 728
10028641-105		$ 728
10034250-084	Metal trim kit for Aeroeffect with Air Push Control (sold separately) Available colors: Chrome **(084)** and Brushed Nickel **(105)**	$ 82
10034250-105		$ 82
10022491-004	Cable-operated waste and overflow (16 in. to 22 in.) (sold separately) Available colors: White **(001)**, Bone **(004)**, Chrome **(084)** and Brushed Nickel **(105)**	$ 362

FOOTNOTES

No	Description
54	A selection of units come with an access panel by default when equipped with a system. However, if the unit is only equipped with chromatherapy, the access panel will not be provided by default.

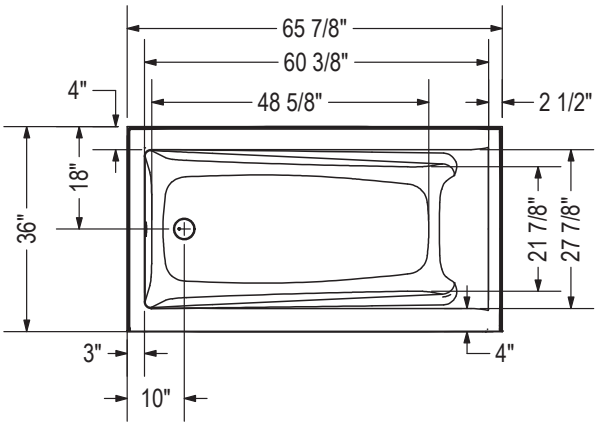

IFS Without System
Single tiling flange

IFS With System
(access panel)
Single tiling flange

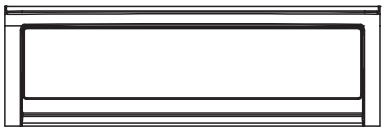

1" Single integrated tiling flange (not shown)
2" Double integrated tiling flange (not shown)
Drop-in model (Shown)

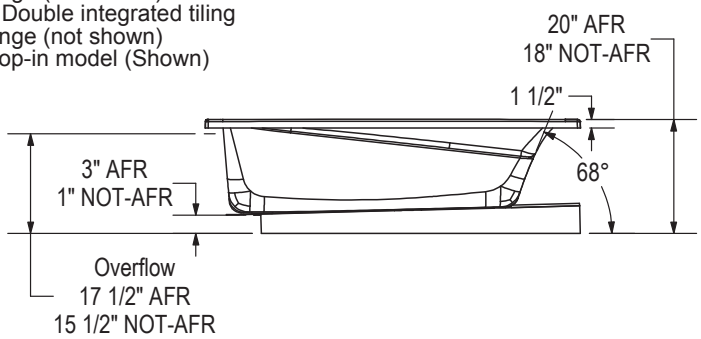

WHIRLPOOL SYSTEM

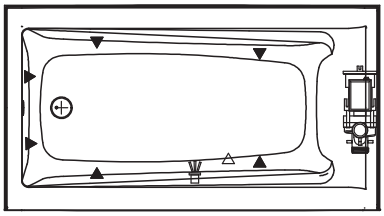

AIR SYSTEM

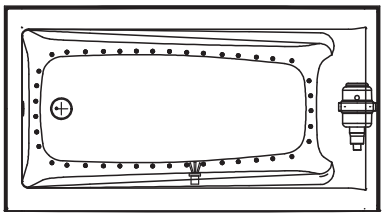

(▲) : Indicates whirlpool jets positioning
(△) : Indicates suction positioning
(●) : Indicates airjets positioning
( ) : Indicates chromatherapy light positioning

Technical drawing is universal for all Exhibit 6636 configurations.

Wood support design may vary.
Single Integrated tiling flange: 1" height x 1/4'' thickness (not shown)
Double Integrated tiling flange: 2" height (not shown)

All dimensions are approximate.
Structure measurement must be verified against the unit to ensure proper fit.

Exhibit 7232 IF

Material : Acrylic

Features

- Rectangular shape bathtub
- Alcove installation with tiling flange
- Minimalist look with discreet armrests and textured floor
- Right of left-hand drain

EXHIBIT 7232 IF - 106224

SKU	System	Color	Configuration	Dimensions & Weight	Packaging	MSRP
106224-000-001-001	Soaker - No System	White	Left Drain	71 7/8” x 32” x 18” / 80 lb	34 ft³	$ 1747
106224-000-001-002			Right Drain			$ 1747
106224-103-001-001	Aeroeffect [1 2 5]		Left Drain			$ 4760
106224-103-001-002			Right Drain			$ 4760
106224-L-001-001	Whirlpool [1 4]		Left Drain			$ 3534
106224-L-096-001	Combined Whirlpool & Aeroeffect [1 3]					$ 6059
106224-R-001-001	Whirlpool [1 4]		Right Drain			$ 3534
106224-R-096-001	Combined Whirlpool & Aeroeffect [1 3]					$ 6059

COMMON OPTIONS

SKU	Description	MSRP
OPT20137-004	Cable-operated waste and overflow (16 in. to 22 in.) (included in product packaging when purchased) Available colors: White **(001)**, Bone **(004)**, Chrome **(084)** and Brushed Nickel **(105)**	$ 362
OPT20137-084		$ 362
OPT20137-105		$ 362
OPT20137-001		$ 362
OPT10053	One chromatherapy light (factory installed) [54]	$ 790
OPT10095	Water heater assembly for whirlpool and combined systems (factory installed)	$ 1033
OPT10106-084	Metal trim kit for whirlpool and combined systems (factory installed) Available colors: Chrome **(084)** and Brushed Nickel **(105)**	$ 728
OPT10106-105		$ 728
OPT20029-105	Metal trim kit for air push control (factory installed) Available colors: Chrome **(084)** and Brushed Nickel **(105)**	$ 82
OPT20029-084		$ 82

ACCESSORIES

SKU	Description	MSRP
10006923	Flexible main hose (9 ft. extension) for air push control air massage - Kit (sold separately)	$ 209
10004306-001	White foam cushion with 2 suction pads (sold separately) Available color: White **(001)**	$ 138
10028641-084	Metal trim kit for Whirlpool and combined systems (sold separately) Available colors: Chrome **(084)** and Brushed Nickel **(105)**	$ 728
10028641-105		$ 728
10034250-084	Metal trim kit for Aeroeffect with Air Push Control (sold separately) Available colors: Chrome **(084)** and Brushed Nickel **(105)**	$ 82
10034250-105		$ 82
10022491-004	Cable-operated waste and overflow (16 in. to 22 in.) (sold separately) Available colors: White **(001)**, Bone **(004)**, Chrome **(084)** and Brushed Nickel **(105)**	$ 362

FOOTNOTES

No	Description
1	Components for standard colour units equipped with systems are colour-coordinated. Trim kit and/or air push with metallic finish can be added (additional charge applies). For non-standard colour units, please specify trim kit and/or air push colour (additional charge applies for metallic finishes). Please note that the positioning of the system's control could be in conflict with the door if one was installed on the unit. To insure compatibility, please contact customer service.
2	Please order flexible main hose 10006923 for installation of the blower further than 3 ft from the bathtub. For the Tandem models and the Serenade models (freestanding and drop-in), the blower is always remote and not factory installed so a 9 ft flexible main hose is included. Please note that the positioning of the system's control could be in conflict with the door if one was installed on the unit. To insure compatibility, please contact customer service.
3	The blower is not factory installed (remote). 9 ft flexible main hose included. Please note that the positioning of the system's control could be in conflict with the door if one was installed on the unit. To insure compatibility, please contact customer service.
4	For details on pump position and requirements, see technical drawings on https://www.maax.com. When there is a pump position A or B indicated on the technical drawing, please specify position when ordering.
5	For details on blower position and requirements, see technical drawings on https://www.maax.com. When there is a blower position A or B indicated on the technical drawing, please specify position when ordering.
54	A selection of units come with an access panel by default when equipped with a system. However, if the unit is only equipped with chromatherapy, the access panel will not be provided by default.

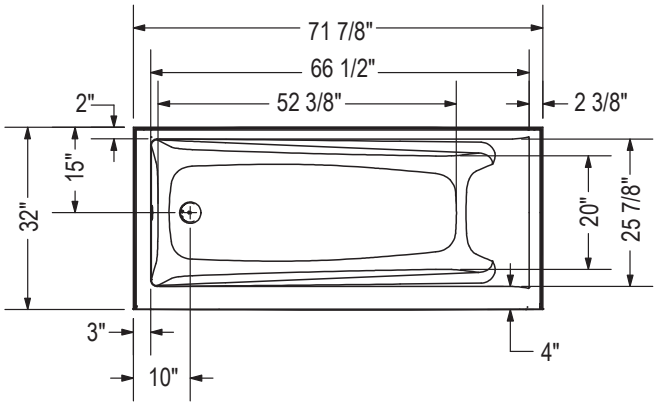

IFS Without System
Single tiling flange

IFS With System
(access panel)
Single tiling flange

1" Single integrated tiling
flange (shown)
IFS model (shown)

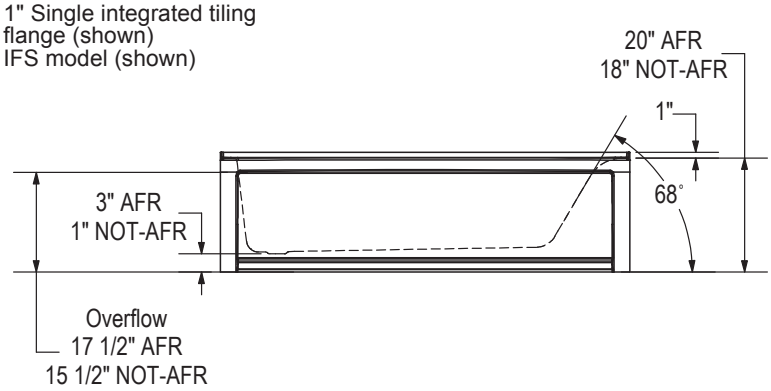

WHIRLPOOL SYSTEM

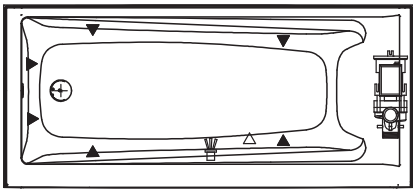

AIR SYTEM

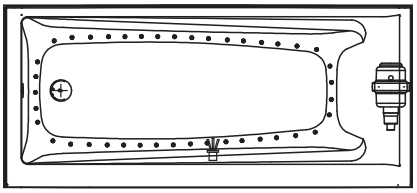

Technical drawing is universal for all Exhibit 7232 configurations.

Wood support design may vary.
Single Integrated tiling flange: 1" height x 1/4'' thickness (shown)

All dimensions are approximate.
Structure measurement must be verified against the unit to ensure proper fit.

(▲) : Indicates whirlpool jets positioning
(△) : Indicates suction positioning
(●) : Indicates airjets positioning
(♛) : Indicates chromatherapy light positioning

Exhibit 7232 IF DTF

Material : Acrylic

Features

- Unique feature: minimalist look with discreet armrests
- Textured bottom
- Alcove installation
- Integrated double tiling flange
- Access panel available on IFS models only

EXHIBIT 7232 IF DTF - 106239

SKU	System	Color	Configuration	Dimensions & Weight	Packaging	MSRP
106239-000-001-104	Soaker - No System	White	Left Drain	71 7/8” x 32” x 18” / 80 lb	34 ft³	$ 1747
106239-000-001-105			Right Drain			$ 1747
106239-L-001-001	Whirlpool [1 4]		Left Drain			$ 3534
106239-L-096-001	Combined Whirlpool & Aeroeffect [1 3]					$ 6059
106239-L-103-001	Aeroeffect [1 2 5]					$ 4760
106239-R-001-001	Whirlpool [1 4]		Right Drain			$ 3534
106239-R-096-001	Combined Whirlpool & Aeroeffect [1 3]					$ 6059
106239-R-103-001	Aeroeffect [1 2 5]					$ 4760

COMMON OPTIONS

SKU	Description	MSRP
OPT20029-105	Metal trim kit for air push control (factory installed) Available colors: Chrome **(084)** and Brushed Nickel **(105)**	$ 82
OPT20029-084		$ 82
OPT20137-004	Cable-operated waste and overflow (16 in. to 22 in.) (included in product packaging when purchased) Available colors: White **(001)**, Bone **(004)**, Chrome **(084)** and Brushed Nickel **(105)**	$ 362
OPT20137-084		$ 362
OPT20137-105		$ 362
OPT20137-001		$ 362
OPT10019	Removable access panel	$ 419
OPT10053	One chromatherapy light (factory installed) [54]	$ 790
OPT10095	Water heater assembly for whirlpool and combined systems (factory installed)	$ 1033
OPT10106-084	Metal trim kit for whirlpool and combined systems (factory installed) Available colors: Chrome **(084)** and Brushed Nickel **(105)**	$ 728
OPT10106-105		$ 728

ACCESSORIES

SKU	Description	MSRP
10006923	Flexible main hose (9 ft. extension) for air push control air massage - Kit (sold separately)	$ 209
10004306-001	White foam cushion with 2 suction pads (sold separately) Available color: White **(001)**	$ 138
10028641-084	Metal trim kit for Whirlpool and combined systems (sold separately) Available colors: Chrome **(084)** and Brushed Nickel **(105)**	$ 728
10028641-105		$ 728
10034250-084	Metal trim kit for Aeroeffect with Air Push Control (sold separately) Available colors: Chrome **(084)** and Brushed Nickel **(105)**	$ 82
10034250-105		$ 82
10022491-004	Cable-operated waste and overflow (16 in. to 22 in.) (sold separately) Available colors: White **(001)**, Bone **(004)**, Chrome **(084)** and Brushed Nickel **(105)**	$ 362

FOOTNOTES

No	Description
1	Components for standard colour units equipped with systems are colour-coordinated. Trim kit and/or air push with metallic finish can be added (additional charge applies). For non-standard colour units, please specify trim kit and/or air push colour (additional charge applies for metallic finishes). Please note that the positioning of the system's control could be in conflict with the door if one was installed on the unit. To insure compatibility, please contact customer service.
2	Please order flexible main hose 10006923 for installation of the blower further than 3 ft from the bathtub. For the Tandem models and the Serenade models (freestanding and drop-in), the blower is always remote and not factory installed so a 9 ft flexible main hose is included. Please note that the positioning of the system's control could be in conflict with the door if one was installed on the unit. To insure compatibility, please contact customer service.
3	The blower is not factory installed (remote). 9 ft flexible main hose included. Please note that the positioning of the system's control could be in conflict with the door if one was installed on the unit. To insure compatibility, please contact customer service.
4	For details on pump position and requirements, see technical drawings on https://www.maax.com. When there is a pump position A or B indicated on the technical drawing, please specify position when ordering.
5	For details on blower position and requirements, see technical drawings on https://www.maax.com. When there is a blower position A or B indicated on the technical drawing, please specify position when ordering.
54	A selection of units come with an access panel by default when equipped with a system. However, if the unit is only equipped with chromatherapy, the access panel will not be provided by default.

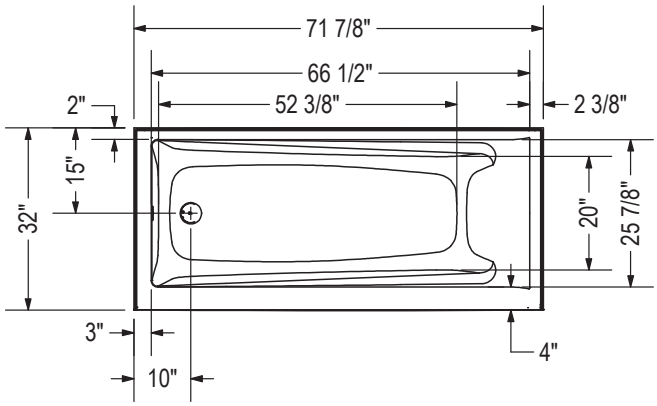

IFS Without System
Single tiling flange

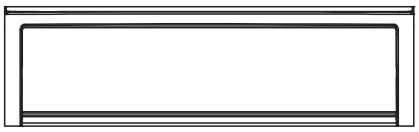

IFS With System
(access panel)
Single tiling flange

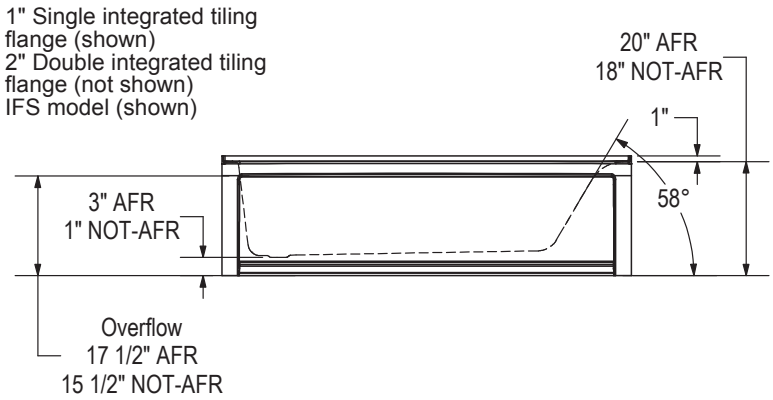

WHIRLPOOL SYSTEM

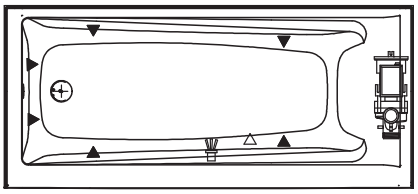

AIR SYSTEM

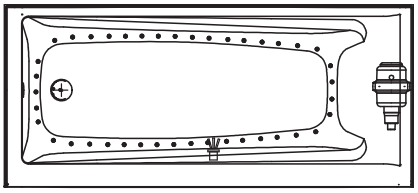

Technical drawing is universal for all Exhibit 7232 configurations.

Wood support design may vary.
Single Integrated tiling flange: 1" height x 1/4'' thickness (shown)
Double Integrated tiling flange: 2" height (not shown)

All dimensions are approximate.
Structure measurement must be verified against the unit to ensure proper fit.

(▲) : Indicates whirlpool jets positioning
(△) : Indicates suction positioning
(●) : Indicates airjets positioning
(♛) : Indicates chromatherapy light positioning

Exhibit 7232 IFS

Material : Acrylic

Features

- Rectangular shape bathtub in alcove installation
- Available in Above-the-Floor Rough (AFR) or not
- Minimalist look with discreet armrests and textured floor
- Integrated tiling flange
- When equipped with a system, the unit comes with an access panel

EXHIBIT 7232 IFS - 106225

SKU	System	Color	Configuration	Dimensions & Weight	Packaging	MSRP
106225-000-001-100	Soaker - No System	White	Left Drain	71 7/8” x 32” x 18” / 92 lb	34 ft³	$ 2078
106225-000-001-101			Right Drain			$ 2078
106225-L-001-001	Whirlpool [1 4]		Left Drain			$ 3865
106225-L-096-001	Combined Whirlpool & Aeroeffect [1 3]					$ 6390
106225-L-103-001	Aeroeffect [1 2 5]					$ 5091
106225-R-001-001	Whirlpool [1 4]		Right Drain			$ 3865
106225-R-096-001	Combined Whirlpool & Aeroeffect [1 3]					$ 6390
106225-R-103-001	Aeroeffect [1 2 5]					$ 5091

EXHIBIT 7232 IFS AFR - 106226

SKU	System	Color	Configuration	Dimensions & Weight	Packaging	MSRP
106226-000-001-102	Soaker - No System	White	Left Drain	71 7/8” x 32” x 20” / 92 lb	34 ft³	$ 2078
106226-000-001-103			Right Drain			$ 2078
106226-001-001-001	Whirlpool [1 4]		Left Drain			$ 3865
106226-001-001-002			Right Drain			$ 3865
106226-L-096-001	Combined Whirlpool & Aeroeffect [1 3]		Left Drain			$ 6390
106226-L-103-001	Aeroeffect [1 2 5]					$ 5091
106226-R-096-001	Combined Whirlpool & Aeroeffect [1 3]		Right Drain			$ 6390
106226-R-103-001	Aeroeffect [1 2 5]					$ 5091

COMMON OPTIONS

SKU	Description	MSRP
OPT20029-105	Metal trim kit for air push control (factory installed) Available colors: Chrome **(084)** and Brushed Nickel **(105)**	$ 82
OPT20029-084		$ 82
OPT20137-004	Cable-operated waste and overflow (16 in. to 22 in.) (included in product packaging when purchased) Available colors: White **(001)**, Bone **(004)**, Chrome **(084)** and Brushed Nickel **(105)**	$ 362
OPT20137-084		$ 362
OPT20137-105		$ 362
OPT20137-001		$ 362
OPT10019	Removable access panel	$ 419
OPT10053	One chromatherapy light (factory installed) [54]	$ 790
OPT10095	Water heater assembly for whirlpool and combined systems (factory installed)	$ 1033
OPT10106-084	Metal trim kit for whirlpool and combined systems (factory installed) Available colors: Chrome **(084)** and Brushed Nickel **(105)**	$ 728
OPT10106-105		$ 728

ACCESSORIES

SKU	Description	MSRP
10006923	Flexible main hose (9 ft. extension) for air push control air massage - Kit (sold separately)	$ 209
10004306-001	White foam cushion with 2 suction pads (sold separately) Available color: White **(001)**	$ 138
10028641-084	Metal trim kit for Whirlpool and combined systems (sold separately) Available colors: Chrome **(084)** and Brushed Nickel **(105)**	$ 728
10028641-105		$ 728
10034250-084	Metal trim kit for Aeroeffect with Air Push Control (sold separately) Available colors: Chrome **(084)** and Brushed Nickel **(105)**	$ 82
10034250-105		$ 82
10022491-004	Cable-operated waste and overflow (16 in. to 22 in.) (sold separately) Available colors: White **(001)**, Bone **(004)**, Chrome **(084)** and Brushed Nickel **(105)**	$ 362

FOOTNOTES

No	Description
1	Components for standard colour units equipped with systems are colour-coordinated. Trim kit and/or air push with metallic finish can be added (additional charge applies). For non-standard colour units, please specify trim kit and/or air push colour (additional charge applies for metallic finishes). Please note that the positioning of the system's control could be in conflict with the door if one was installed on the unit. To insure compatibility, please contact customer service.
2	Please order flexible main hose 10006923 for installation of the blower further than 3 ft from the bathtub. For the Tandem models and the Serenade models (freestanding and drop-in), the blower is always remote and not factory installed so a 9 ft flexible main hose is included. Please note that the positioning of the system's control could be in conflict with the door if one was installed on the unit. To insure compatibility, please contact customer service.
3	The blower is not factory installed (remote). 9 ft flexible main hose included. Please note that the positioning of the system's control could be in conflict with the door if one was installed on the unit. To insure compatibility, please contact customer service.
4	For details on pump position and requirements, see technical drawings on https://www.maax.com. When there is a pump position A or B indicated on the technical drawing, please specify position when ordering.
5	For details on blower position and requirements, see technical drawings on https://www.maax.com. When there is a blower position A or B indicated on the technical drawing, please specify position when ordering.
54	A selection of units come with an access panel by default when equipped with a system. However, if the unit is only equipped with chromatherapy, the access panel will not be provided by default.

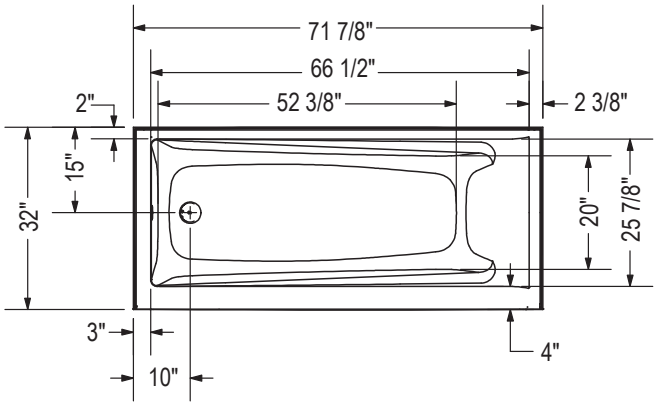

IFS Without System
Single tiling flange

IFS With System
(access panel)
Single tiling flange

1" Single integrated tiling
flange (shown)
IFS model (shown)

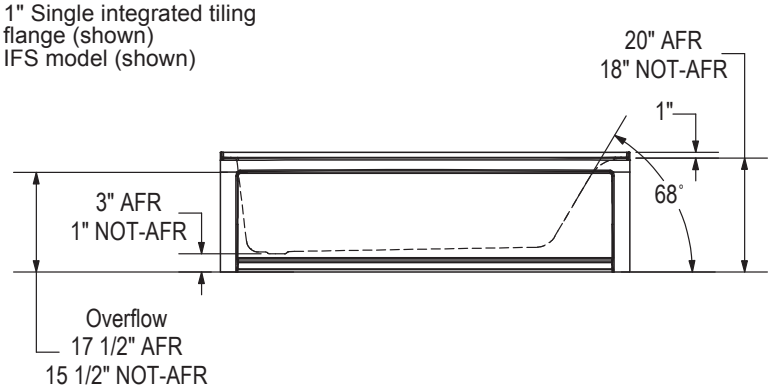

WHIRLPOOL SYSTEM

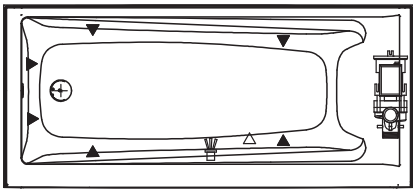

AIR SYTEM

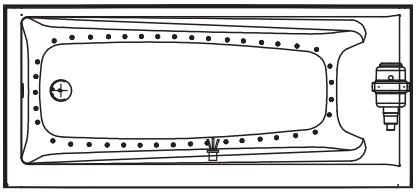

Technical drawing is universal for all Exhibit 7232 configurations.

Wood support design may vary.
Single Integrated tiling flange: 1" height x 1/4'' thickness (shown)

All dimensions are approximate.
Structure measurement must be verified against the unit to ensure proper fit.

(▲) : Indicates whirlpool jets positioning
(△) : Indicates suction positioning
(●) : Indicates airjets positioning
(♛) : Indicates chromatherapy light positioning

Exhibit 7232 IFS DTF

Material : Acrylic

Features

- Rectangular shape bathtub in alcove installation
- Available in Above-the-Floor Rough (AFR) or not
- Minimalist look with discreet armrests and textured floor
- Integrated tiling flange
- When equipped with a system, the unit comes with an access panel

EXHIBIT 7232 IFS DTF - 106240

SKU	System	Color	Configuration	Dimensions & Weight	Packaging	MSRP
106240-000-001-106	Soaker - No System	White	Left Drain	71 7/8” x 32” x 18” / 92 lb	34 ft³	$ 2078
106240-000-001-107			Right Drain			$ 2078
106240-L-001-001	Whirlpool [1 4]		Left Drain			$ 3865
106240-L-096-001	Combined Whirlpool & Aeroeffect [1 3]					$ 6390
106240-L-103-001	Aeroeffect [1 2 5]					$ 5091
106240-R-001-001	Whirlpool [1 4]		Right Drain			$ 3865
106240-R-096-001	Combined Whirlpool & Aeroeffect [1 3]					$ 6390
106240-R-103-001	Aeroeffect [1 2 5]					$ 5091

EXHIBIT 7232 IFS AFR DTF - 106241

SKU	System	Color	Configuration	Dimensions & Weight	Packaging	MSRP
106241-000-001-108	Soaker - No System	White	Left Drain	71 7/8” x 32” x 20” / 92 lb	34 ft³	$ 2078
106241-000-001-109			Right Drain			$ 2078
106241-L-001-001	Whirlpool [1 4]		Left Drain			$ 3865
106241-L-096-001	Combined Whirlpool & Aeroeffect [1 3]					$ 6390
106241-L-103-001	Aeroeffect [1 2 5]					$ 5091
106241-R-001-001	Whirlpool [1 4]		Right Drain			$ 3865
106241-R-096-001	Combined Whirlpool & Aeroeffect [1 3]					$ 6390
106241-R-103-001	Aeroeffect [1 2 5]					$ 5091

COMMON OPTIONS

SKU	Description	MSRP
OPT20029-105	Metal trim kit for air push control (factory installed) Available colors: Chrome **(084)** and Brushed Nickel **(105)**	$ 82
OPT20029-084		$ 82
OPT20137-004	Cable-operated waste and overflow (16 in. to 22 in.) (included in product packaging when purchased) Available colors: White **(001)**, Bone **(004)**, Chrome **(084)** and Brushed Nickel **(105)**	$ 362
OPT20137-084		$ 362
OPT20137-105		$ 362
OPT20137-001		$ 362
OPT10019	Removable access panel	$ 419
OPT10053	One chromatherapy light (factory installed) [54]	$ 790
OPT10095	Water heater assembly for whirlpool and combined systems (factory installed)	$ 1033
OPT10106-084	Metal trim kit for whirlpool and combined systems (factory installed) Available colors: Chrome **(084)** and Brushed Nickel **(105)**	$ 728
OPT10106-105		$ 728

ACCESSORIES

SKU	Description	MSRP
10006923	Flexible main hose (9 ft. extension) for air push control air massage - Kit (sold separately)	$ 209
10004306-001	White foam cushion with 2 suction pads (sold separately) Available color: White **(001)**	$ 138
10028641-084	Metal trim kit for Whirlpool and combined systems (sold separately) Available colors: Chrome **(084)** and Brushed Nickel **(105)**	$ 728
10028641-105		$ 728
10034250-084	Metal trim kit for Aeroeffect with Air Push Control (sold separately) Available colors: Chrome **(084)** and Brushed Nickel **(105)**	$ 82
10034250-105		$ 82
10022491-004	Cable-operated waste and overflow (16 in. to 22 in.) (sold separately) Available colors: White **(001)**, Bone **(004)**, Chrome **(084)** and Brushed Nickel **(105)**	$ 362

FOOTNOTES

No	Description
54	A selection of units come with an access panel by default when equipped with a system. However, if the unit is only equipped with chromatherapy, the access panel will not be provided by default.

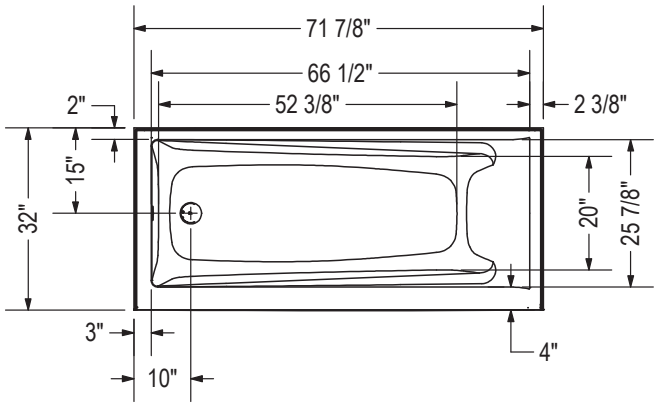

IFS Without System
Single tiling flange

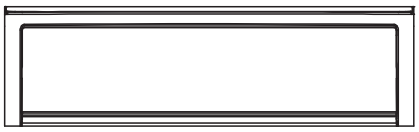

IFS With System
(access panel)
Single tiling flange

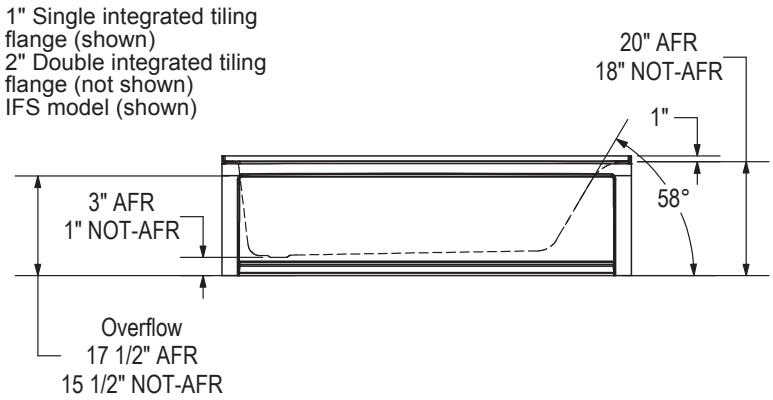

WHIRLPOOL SYSTEM

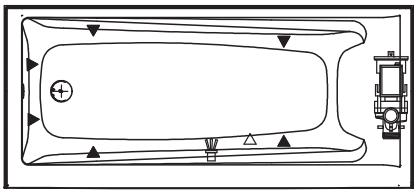

AIR SYSTEM

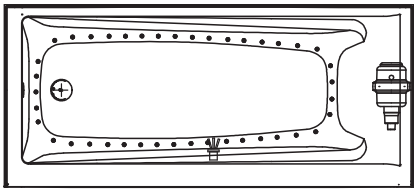

Technical drawing is universal for all Exhibit 7232 configurations.

Wood support design may vary.
Single Integrated tiling flange: 1" height x 1/4'' thickness (shown)
Double Integrated tiling flange: 2" height (not shown)

All dimensions are approximate.
Structure measurement must be verified against the unit to ensure proper fit.

(▲) : Indicates whirlpool jets positioning
(△) : Indicates suction positioning
(●) : Indicates airjets positioning
(♛) : Indicates chromatherapy light positioning

Exhibit 7234

Material : Acrylic

Features

- Rectangular shape bathtub
- Drop-in installation
- Minimalist look with discreet armrests and textured floor
- End drain

EXHIBIT 7234 - 106223

SKU	System	Color	Configuration	Dimensions & Weight	Packaging	MSRP
106223-000-001-000	Soaker - No System	White	End Drain	71 7/8” x 34” x 18” / 80 lb	35 ft³	$ 1747
106223-001-001-100	Whirlpool [1 4]					$ 3534
106223-096-001	Combined Whirlpool & Aeroeffect [1 3]					$ 6059
106223-103-001	Aeroeffect [1 2 5]					$ 4760

COMMON OPTIONS

SKU	Description	MSRP
OPT10053	One chromatherapy light (factory installed) [54]	$ 790
OPT10095	Water heater assembly for whirlpool and combined systems (factory installed)	$ 1033
OPT10106-084	Metal trim kit for whirlpool and combined systems (factory installed) Available colors: Chrome **(084)** and Brushed Nickel **(105)**	$ 728
OPT10106-105		$ 728
OPT20029-105	Metal trim kit for air push control (factory installed) Available colors: Chrome **(084)** and Brushed Nickel **(105)**	$ 82
OPT20029-084		$ 82
OPT20137-004	Cable-operated waste and overflow (16 in. to 22 in.) (included in product packaging when purchased) Available colors: White **(001)**, Bone **(004)**, Chrome **(084)** and Brushed Nickel **(105)**	$ 362
OPT20137-084		$ 362
OPT20137-105		$ 362
OPT20137-001		$ 362

ACCESSORIES

SKU	Description	MSRP
10006923	Flexible main hose (9 ft. extension) for air push control air massage - Kit (sold separately)	$ 209
10004306-001	White foam cushion with 2 suction pads (sold separately) Available color: White **(001)**	$ 138
10028641-084	Metal trim kit for Whirlpool and combined systems (sold separately) Available colors: Chrome **(084)** and Brushed Nickel **(105)**	$ 728
10028641-105		$ 728
10034250-084	Metal trim kit for Aeroeffect with Air Push Control (sold separately) Available colors: Chrome **(084)** and Brushed Nickel **(105)**	$ 82
10034250-105		$ 82
10022491-004	Cable-operated waste and overflow (16 in. to 22 in.) (sold separately) Available colors: White **(001)**, Bone **(004)**, Chrome **(084)** and Brushed Nickel **(105)**	$ 362

FOOTNOTES

No	Description
1	Components for standard colour units equipped with systems are colour-coordinated. Trim kit and/or air push with metallic finish can be added (additional charge applies). For non-standard colour units, please specify trim kit and/or air push colour (additional charge applies for metallic finishes). Please note that the positioning of the system’s control could be in conflict with the door if one was installed on the unit. To insure compatibility, please contact customer service.

FOOTNOTES

No	Description
2	Please order flexible main hose 10006923 for installation of the blower further than 3 ft from the bathtub. For the Tandem models and the Serenade models (freestanding and drop-in), the blower is always remote and not factory installed so a 9 ft flexible main hose is included. Please note that the positioning of the system's control could be in conflict with the door if one was installed on the unit. To insure compatibility, please contact customer service.
3	The blower is not factory installed (remote). 9 ft flexible main hose included. Please note that the positioning of the system's control could be in conflict with the door if one was installed on the unit. To insure compatibility, please contact customer service.
4	For details on pump position and requirements, see technical drawings on https://www.maax.com. When there is a pump position A or B indicated on the technical drawing, please specify position when ordering.
5	For details on blower position and requirements, see technical drawings on https://www.maax.com. When there is a blower position A or B indicated on the technical drawing, please specify position when ordering.
54	A selection of units come with an access panel by default when equipped with a system. However, if the unit is only equipped with chromatherapy, the access panel will not be provided by default.

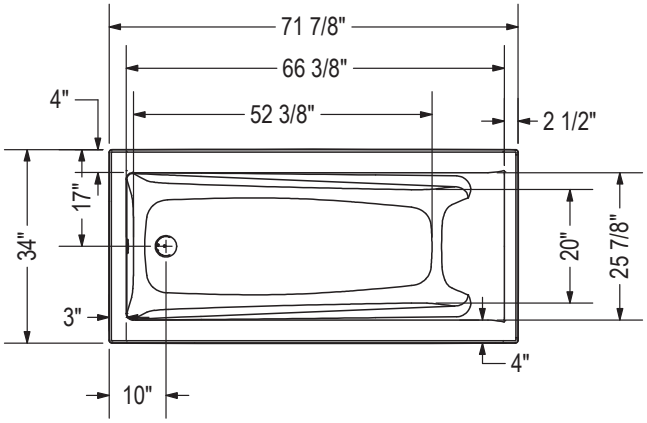

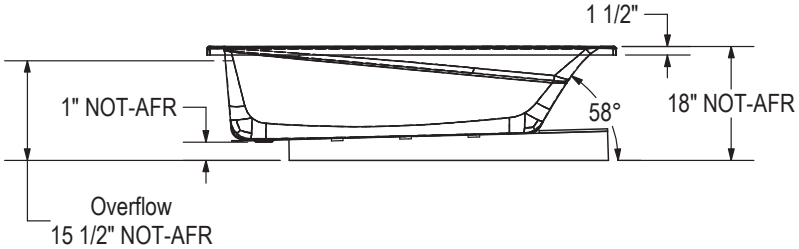

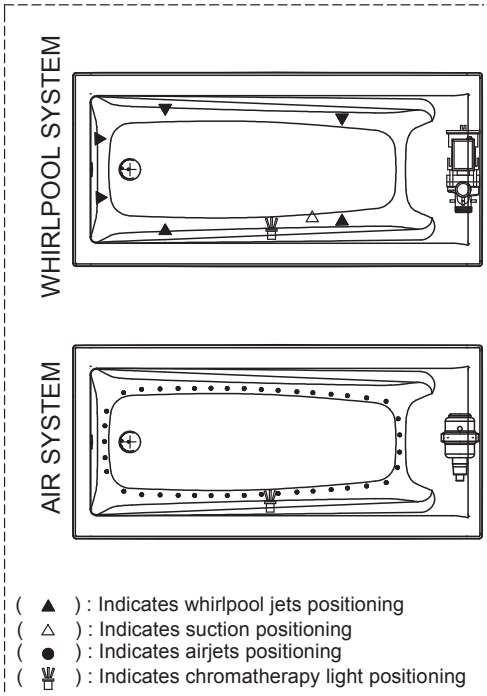

(▲) : Indicates whirlpool jets positioning
(△) : Indicates suction positioning
(●) : Indicates airjets positioning
( ) : Indicates chromatherapy light positioning

All dimensions are approximate.
Structure measurement must be verified against the unit to ensure proper fit.

Exhibit 7236

Material : Acrylic

Features

- Rectangular shape bathtub
- Drop-in or alcove installation with tiling flange
- Minimalist look with discreet armrests and textured floor
- End drain

EXHIBIT 7236 - 106181

SKU	System	Color	Configuration	Dimensions & Weight	Packaging	MSRP
106181-000-001-000	Soaker - No System	White	End Drain	71 7/8” x 36” x 18” / 86 lb	0 ft^3	$ 1762
106181-001-001-000	Whirlpool [1 4]					$ 3549
106181-002-001-100	Multi-Pack [9]					$ 7930
106181-096-001	Combined Whirlpool & Aeroeffect [1 3]					$ 6074
106181-103-001-100	Aeroeffect [1 2 5]					$ 4775

COMMON OPTIONS

SKU	Description	MSRP
OPT20137-004	Cable-operated waste and overflow (16 in. to 22 in.) (included in product packaging when purchased) Available colors: White **(001)**, Bone **(004)**, Chrome **(084)** and Brushed Nickel **(105)**	$ 362
OPT20137-084		$ 362
OPT20137-105		$ 362
OPT20137-001		$ 362
OPT10053	One chromatherapy light (factory installed) [54]	$ 790
OPT10095	Water heater assembly for whirlpool and combined systems (factory installed)	$ 1033
OPT10106-084	Metal trim kit for whirlpool and combined systems (factory installed) Available colors: Chrome **(084)** and Brushed Nickel **(105)**	$ 728
OPT10106-105		$ 728
OPT20029-105	Metal trim kit for air push control (factory installed) Available colors: Chrome **(084)** and Brushed Nickel **(105)**	$ 82
OPT20029-084		$ 82

ACCESSORIES

SKU	Description	MSRP
10006923	Flexible main hose (9 ft. extension) for air push control air massage - Kit (sold separately)	$ 209
10004306-001	White foam cushion with 2 suction pads (sold separately) Available color: White **(001)**	$ 138
10028641-084	Metal trim kit for Whirlpool and combined systems (sold separately) Available colors: Chrome **(084)** and Brushed Nickel **(105)**	$ 728
10028641-105		$ 728
10034250-084	Metal trim kit for Aeroeffect with Air Push Control (sold separately) Available colors: Chrome **(084)** and Brushed Nickel **(105)**	$ 82
10034250-105		$ 82
10022491-004	Cable-operated waste and overflow (16 in. to 22 in.) (sold separately) Available colors: White **(001)**, Bone **(004)**, Chrome **(084)** and Brushed Nickel **(105)**	$ 362

FOOTNOTES

No	Description
1	Components for standard colour units equipped with systems are colour-coordinated. Trim kit and/or air push with metallic finish can be added (additional charge applies). For non-standard colour units, please specify trim kit and/or air push colour (additional charge applies for metallic finishes). Please note that the positioning of the system’s control could be in conflict with the door if one was installed on the unit. To insure compatibility, please contact customer service.

FOOTNOTES

No	Description
2	Please order flexible main hose 10006923 for installation of the blower further than 3 ft from the bathtub. For the Tandem models and the Serenade models (freestanding and drop-in), the blower is always remote and not factory installed so a 9 ft flexible main hose is included. Please note that the positioning of the system's control could be in conflict with the door if one was installed on the unit. To insure compatibility, please contact customer service.
4	For details on pump position and requirements, see technical drawings on https://www.maax.com. When there is a pump position A or B indicated on the technical drawing, please specify position when ordering.
5	For details on blower position and requirements, see technical drawings on https://www.maax.com. When there is a blower position A or B indicated on the technical drawing, please specify position when ordering.
54	A selection of units come with an access panel by default when equipped with a system. However, if the unit is only equipped with chromatherapy, the access panel will not be provided by default.

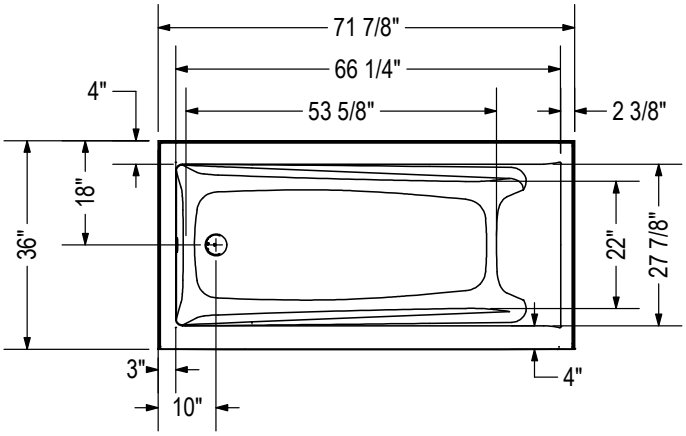

IFS Without System
Single tiling flange

IFS With System
(access panel)
Single tiling flange

1" Single integrated tiling
flange (not shown)
Drop-in model (shown)

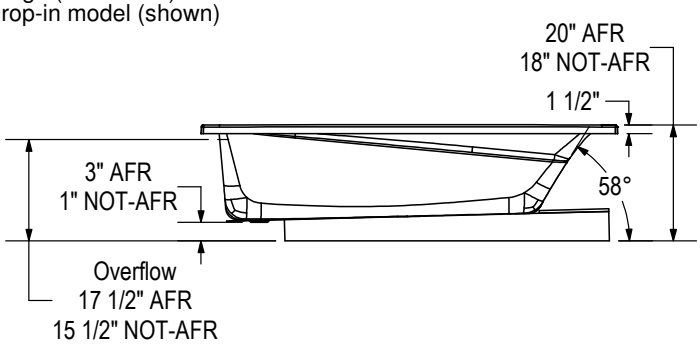

WHIRLPOOL SYSTEM

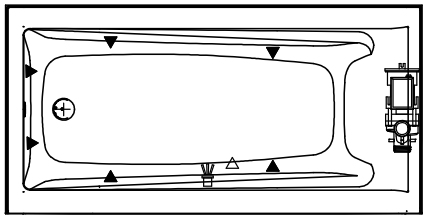

AIR SYTEM

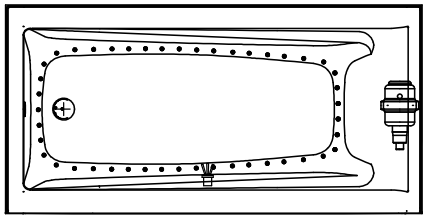

(▲) : Indicates whirlpool jets positioning
(△) : Indicates suction positioning
(●) : Indicates airjets positioning
( ) : Indicates chromatherapy light positioning

Technical drawing is universal for all Exhibit 7236 configurations.

Wood support design may vary.
Single Integrated tiling flange: 1" height x 1/4" thickness (not shown)

All dimensions are approximate.
Structure measurement must be verified against the unit to ensure proper fit.

Exhibit 7236 IF

Material : Acrylic

Features

- Rectangular shape bathtub
- Drop-in or alcove installation with tiling flange
- Minimalist look with discreet armrests and textured floor
- End drain

EXHIBIT 7236 IF - 106182

SKU	System	Color	Configuration	Dimensions & Weight	Packaging	MSRP
106182-000-001-001	Soaker - No System	White	Left Drain	71 7/8” x 36” x 18” / 83 lb	37 ft³	$ 1762
106182-000-001-002			Right Drain			$ 1762
106182-001-001-001	Whirlpool [1 4]		Left Drain			$ 3549
106182-001-001-002			Right Drain			$ 3549
106182-002-001-101	Multi-Pack [9]		Left Drain			$ 7930
106182-002-001-102			Right Drain			$ 7930
106182-103-001-101	Aeroeffect [1 2 5]		Left Drain			$ 4775
106182-103-001-102			Right Drain			$ 4775
106182-L-096-001	Combined Whirlpool & Aeroeffect [1 3]		Left Drain			$ 6074
106182-R-096-001			Right Drain			$ 6074

COMMON OPTIONS

SKU	Description	MSRP
OPT20137-004	Cable-operated waste and overflow (16 in. to 22 in.) (included in product packaging when purchased) Available colors: White **(001)**, Bone **(004)**, Chrome **(084)** and Brushed Nickel **(105)**	$ 362
OPT20137-084		$ 362
OPT20137-105		$ 362
OPT20137-001		$ 362
OPT10053	One chromatherapy light (factory installed) [54]	$ 790
OPT10095	Water heater assembly for whirlpool and combined systems (factory installed)	$ 1033
OPT10106-084	Metal trim kit for whirlpool and combined systems (factory installed) Available colors: Chrome **(084)** and Brushed Nickel **(105)**	$ 728
OPT10106-105		$ 728
OPT20029-105	Metal trim kit for air push control (factory installed) Available colors: Chrome **(084)** and Brushed Nickel **(105)**	$ 82
OPT20029-084		$ 82

ACCESSORIES

SKU	Description	MSRP
10006923	Flexible main hose (9 ft. extension) for air push control air massage - Kit (sold separately)	$ 209
10004306-001	White foam cushion with 2 suction pads (sold separately) Available color: White **(001)**	$ 138
10028641-084	Metal trim kit for Whirlpool and combined systems (sold separately) Available colors: Chrome **(084)** and Brushed Nickel **(105)**	$ 728
10028641-105		$ 728
10034250-084	Metal trim kit for Aeroeffect with Air Push Control (sold separately) Available colors: Chrome **(084)** and Brushed Nickel **(105)**	$ 82
10034250-105		$ 82
10022491-004	Cable-operated waste and overflow (16 in. to 22 in.) (sold separately) Available colors: White **(001)**, Bone **(004)**, Chrome **(084)** and Brushed Nickel **(105)**	$ 362

FOOTNOTES

No	Description
1	Components for standard colour units equipped with systems are colour-coordinated. Trim kit and/or air push with metallic finish can be added (additional charge applies). For non-standard colour units, please specify trim kit and/or air push colour (additional charge applies for metallic finishes). Please note that the positioning of the system's control could be in conflict with the door if one was installed on the unit. To insure compatibility, please contact customer service.
2	Please order flexible main hose 10006923 for installation of the blower further than 3 ft from the bathtub. For the Tandem models and the Serenade models (freestanding and drop-in), the blower is always remote and not factory installed so a 9 ft flexible main hose is included. Please note that the positioning of the system's control could be in conflict with the door if one was installed on the unit. To insure compatibility, please contact customer service.
3	The blower is not factory installed (remote). 9 ft flexible main hose included. Please note that the positioning of the system's control could be in conflict with the door if one was installed on the unit. To insure compatibility, please contact customer service.
4	For details on pump position and requirements, see technical drawings on https://www.maax.com. When there is a pump position A or B indicated on the technical drawing, please specify position when ordering.
5	For details on blower position and requirements, see technical drawings on https://www.maax.com. When there is a blower position A or B indicated on the technical drawing, please specify position when ordering.
54	A selection of units come with an access panel by default when equipped with a system. However, if the unit is only equipped with chromatherapy, the access panel will not be provided by default.

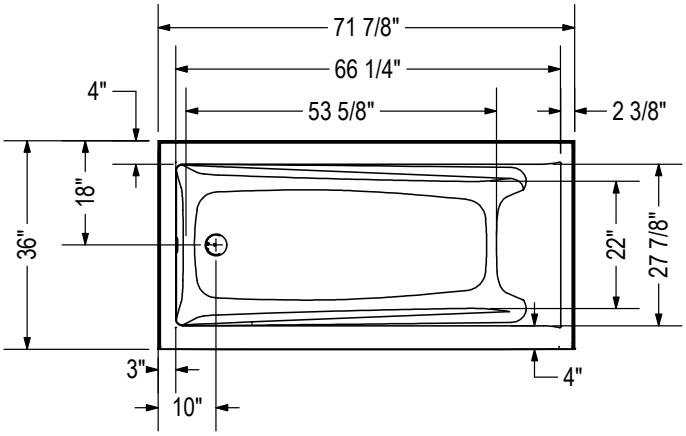

IFS Without System
Single tiling flange

IFS With System
(access panel)
Single tiling flange

1" Single integrated tiling
flange (not shown)
Drop-in model (shown)

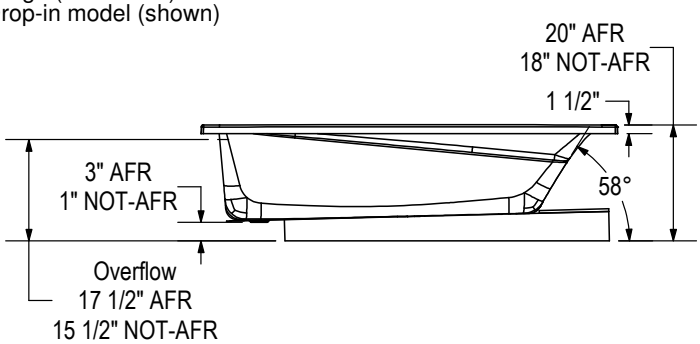

WHIRLPOOL SYSTEM

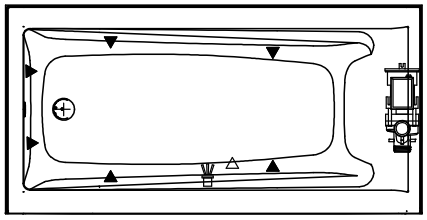

AIR SYTEM

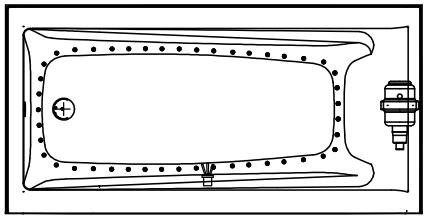

(▲) : Indicates whirlpool jets positioning
(△) : Indicates suction positioning
(●) : Indicates airjets positioning
( ) : Indicates chromatherapy light positioning

Technical drawing is universal for all Exhibit 7236 configurations.

Wood support design may vary.
Single Integrated tiling flange: 1" height x 1/4" thickness (not shown)

All dimensions are approximate.
Structure measurement must be verified against the unit to ensure proper fit.

Exhibit 7236 IF DTF

Material : Acrylic

Features

- Unique feature: minimalist look with discreet armrests
- Textured bottom
- Alcove installation
- Apron with magnetic access panel available
- Integrated double tiling flange
- Access panel available on IFS models only

EXHIBIT 7236 IF DTF - 106242

SKU	System	Color	Configuration	Dimensions & Weight	Packaging	MSRP
106242-000-001-104	Soaker - No System	White	Left Drain	71 7/8” x 36” x 18” / 83 lb	37 ft³	$ 1762
106242-000-001-105			Right Drain			$ 1762
106242-L-001-001	Whirlpool [1 4]		Left Drain			$ 3549
106242-L-096-001	Combined Whirlpool & Aeroeffect [1 3]					$ 6074
106242-L-103-001	Aeroeffect [1 2 5]					$ 4775
106242-R-001-001	Whirlpool [1 4]		Right Drain			$ 3549
106242-R-096-001	Combined Whirlpool & Aeroeffect [1 3]					$ 6074
106242-R-103-001	Aeroeffect [1 2 5]					$ 4775

COMMON OPTIONS

SKU	Description	MSRP
OPT20029-105	Metal trim kit for air push control (factory installed) Available colors: Chrome **(084)** and Brushed Nickel **(105)**	$ 82
OPT20029-084		$ 82
OPT20137-004	Cable-operated waste and overflow (16 in. to 22 in.) (included in product packaging when purchased) Available colors: White **(001)**, Bone **(004)**, Chrome **(084)** and Brushed Nickel **(105)**	$ 362
OPT20137-084		$ 362
OPT20137-105		$ 362
OPT20137-001		$ 362
OPT10019	Removable access panel	$ 419
OPT10053	One chromatherapy light (factory installed) [54]	$ 790
OPT10095	Water heater assembly for whirlpool and combined systems (factory installed)	$ 1033
OPT10106-084	Metal trim kit for whirlpool and combined systems (factory installed) Available colors: Chrome **(084)** and Brushed Nickel **(105)**	$ 728
OPT10106-105		$ 728

ACCESSORIES

SKU	Description	MSRP
10006923	Flexible main hose (9 ft. extension) for air push control air massage - Kit (sold separately)	$ 209
10004306-001	White foam cushion with 2 suction pads (sold separately) Available color: White **(001)**	$ 138
10028641-084	Metal trim kit for Whirlpool and combined systems (sold separately) Available colors: Chrome **(084)** and Brushed Nickel **(105)**	$ 728
10028641-105		$ 728
10034250-084	Metal trim kit for Aeroeffect with Air Push Control (sold separately) Available colors: Chrome **(084)** and Brushed Nickel **(105)**	$ 82
10034250-105		$ 82
10022491-004	Cable-operated waste and overflow (16 in. to 22 in.) (sold separately) Available colors: White **(001)**, Bone **(004)**, Chrome **(084)** and Brushed Nickel **(105)**	$ 362

FOOTNOTES

No	Description
54	A selection of units come with an access panel by default when equipped with a system. However, if the unit is only equipped with chromatherapy, the access panel will not be provided by default.

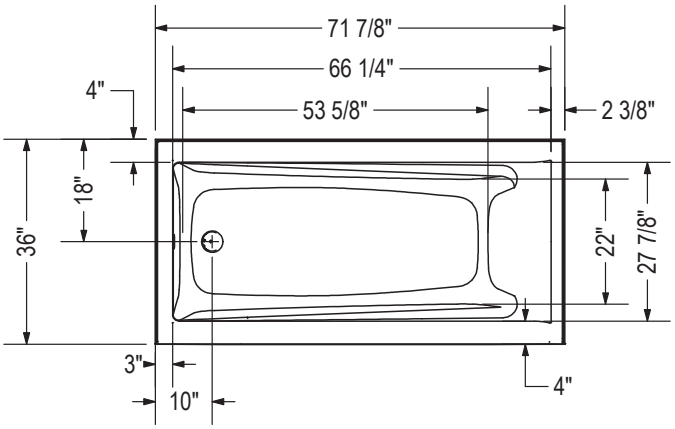

IFS Without System
Single tiling flange

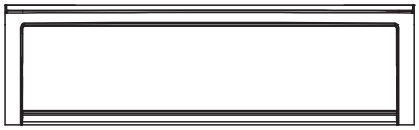

IFS With System
(access panel)
Single tiling flange

1" Single integrated tiling flange (not shown)
2" Double integrated tiling flange (not shown)
Drop-in model (shown)

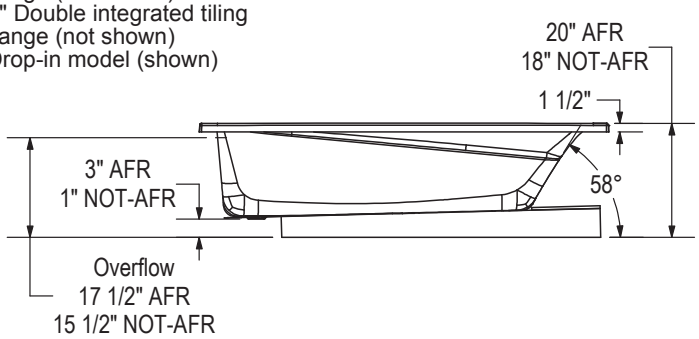

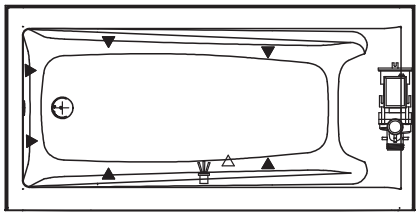

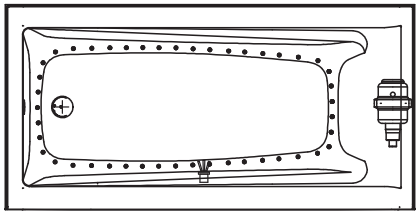

Technical drawing is universal for all Exhibit 7236 configurations.

Wood support design may vary.
Single Integrated tiling flange: 1" height x 1/4'' thickness (not shown)
Double Integrated tiling flange: 2" height (not shown)

All dimensions are approximate.
Structure measurement must be verified against the unit to ensure proper fit.

(▲) : Indicates whirlpool jets positioning
(△) : Indicates suction positioning
(●) : Indicates airjets positioning
(Ψ) : Indicates chromatherapy light positioning

Exhibit 7236 IFS

Material : Acrylic

Features

- Rectangular shape bathtub in alcove installation
- Available in Above-the-Floor Rough (AFR) or not
- Minimalist look with discreet armrests and textured floor
- Integrated tiling flange
- When equipped with a system, the unit comes with an access panel

EXHIBIT 7236 IFS - 106183

SKU	System	Color	Configuration	Dimensions & Weight	Packaging	MSRP
106183-000-001-100	Soaker - No System	White	Left Drain	71 7/8” x 36” x 18” / 98 lb	0 ft³	$ 2132
106183-000-001-101			Right Drain			$ 2132
106183-L-001-001	Whirlpool [1 4]		Left Drain			$ 3919
106183-L-096-001	Combined Whirlpool & Aeroeffect [1 3]					$ 6444
106183-L-103-001	Aeroeffect [1 2 5]					$ 5145
106183-R-001-001	Whirlpool [1 4]		Right Drain			$ 3919
106183-R-096-001	Combined Whirlpool & Aeroeffect [1 3]					$ 6444
106183-R-103-001	Aeroeffect [1 2 5]					$ 5145

EXHIBIT 7236 IFS AFR - 106184

SKU	System	Color	Configuration	Dimensions & Weight	Packaging	MSRP
106184-000-001-102	Soaker - No System	White	Left Drain	71 7/8” x 36” x 20” / 95 lb	37 ft³	$ 2132
106184-000-001-103			Right Drain			$ 2132
106184-L-001-001	Whirlpool [1 4]		Left Drain			$ 3919
106184-L-096-001	Combined Whirlpool & Aeroeffect [1 3]					$ 6444
106184-L-103-001	Aeroeffect [1 2 5]					$ 5145
106184-R-001-001	Whirlpool [1 4]		Right Drain			$ 3919
106184-R-096-001	Combined Whirlpool & Aeroeffect [1 3]					$ 6444
106184-R-103-001	Aeroeffect [1 2 5]					$ 5145

COMMON OPTIONS

SKU	Description	MSRP
OPT10019	Removable access panel	$ 419
OPT10053	One chromatherapy light (factory installed) [54]	$ 790
OPT10095	Water heater assembly for whirlpool and combined systems (factory installed)	$ 1033
OPT10106-084	Metal trim kit for whirlpool and combined systems (factory installed) Available colors: Chrome **(084)** and Brushed Nickel **(105)**	$ 728
OPT10106-105		$ 728
OPT20029-105	Metal trim kit for air push control (factory installed) Available colors: Chrome **(084)** and Brushed Nickel **(105)**	$ 82
OPT20029-084		$ 82
OPT20137-004	Cable-operated waste and overflow (16 in. to 22 in.) (included in product packaging when purchased) Available colors: White **(001)**, Bone **(004)**, Chrome **(084)** and Brushed Nickel **(105)**	$ 362
OPT20137-084		$ 362
OPT20137-105		$ 362
OPT20137-001		$ 362

ACCESSORIES

SKU	Description	MSRP
10006923	Flexible main hose (9 ft. extension) for air push control air massage - Kit (sold separately)	$ 209
10004306-001	White foam cushion with 2 suction pads (sold separately) Available color: White **(001)**	$ 138
10028641-084	Metal trim kit for Whirlpool and combined systems (sold separately) Available colors: Chrome **(084)** and Brushed Nickel **(105)**	$ 728
10028641-105		$ 728
10034250-084	Metal trim kit for Aeroeffect with Air Push Control (sold separately) Available colors: Chrome **(084)** and Brushed Nickel **(105)**	$ 82
10034250-105		$ 82
10022491-004	Cable-operated waste and overflow (16 in. to 22 in.) (sold separately) Available colors: White **(001)**, Bone **(004)**, Chrome **(084)** and Brushed Nickel **(105)**	$ 362

FOOTNOTES

No	Description
1	Components for standard colour units equipped with systems are colour-coordinated. Trim kit and/or air push with metallic finish can be added (additional charge applies). For non-standard colour units, please specify trim kit and/or air push colour (additional charge applies for metallic finishes). Please note that the positioning of the system's control could be in conflict with the door if one was installed on the unit. To insure compatibility, please contact customer service.
4	For details on pump position and requirements, see technical drawings on https://www.maax.com. When there is a pump position A or B indicated on the technical drawing, please specify position when ordering.
54	A selection of units come with an access panel by default when equipped with a system. However, if the unit is only equipped with chromatherapy, the access panel will not be provided by default.

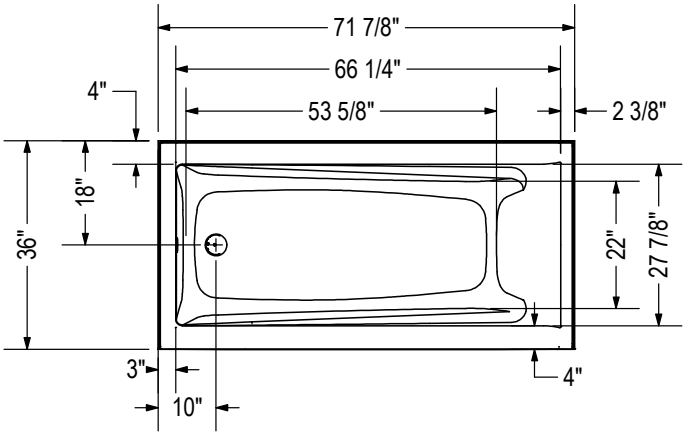

IFS Without System
Single tiling flange

IFS With System
(access panel)
Single tiling flange

1" Single integrated tiling
flange (not shown)
Drop-in model (shown)

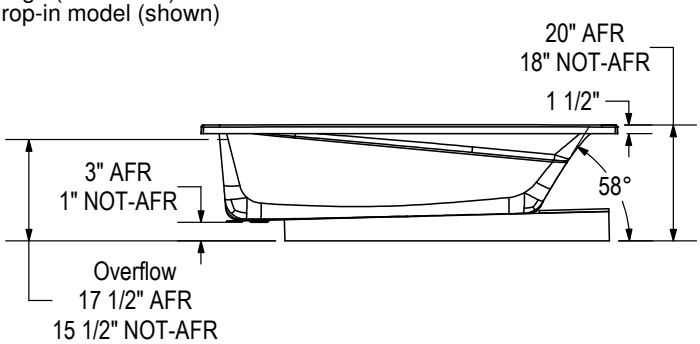

WHIRLPOOL SYSTEM

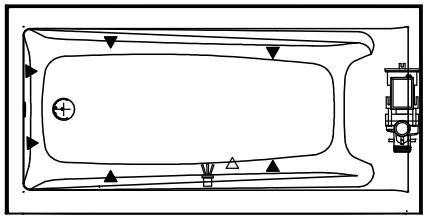

AIR SYTEM

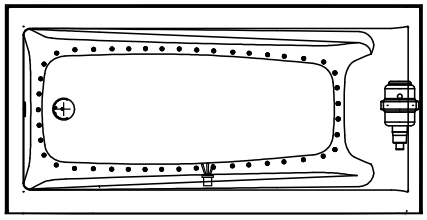

(▲) : Indicates whirlpool jets positioning
(△) : Indicates suction positioning
(●) : Indicates airjets positioning
( ) : Indicates chromatherapy light positioning

Technical drawing is universal for all Exhibit 7236 configurations.

Wood support design may vary.
Single Integrated tiling flange: 1" height x 1/4" thickness (not shown)

All dimensions are approximate.
Structure measurement must be verified against the unit to ensure proper fit.

Exhibit 7236 IFS DTF

Material : Acrylic

Features

- Rectangular shape bathtub in alcove installation
- Available in Above-the-Floor Rough (AFR) or not
- Minimalist look with discreet armrests and textured floor
- Integrated tiling flange
- When equipped with a system, the unit comes with an access panel

EXHIBIT 7236 IFS DTF - 106243

SKU	System	Color	Configuration	Dimensions & Weight	Packaging	MSRP
106243-000-001-106	Soaker - No System	White	Left Drain	71 7/8” x 36” x 18” / 95 lb	37 ft³	$ 2132
106243-000-001-107			Right Drain			$ 2132
106243-L-001-001	Whirlpool [1 4]		Left Drain			$ 3919
106243-L-096-001	Combined Whirlpool & Aeroeffect [1 3]					$ 6444
106243-L-103-001	Aeroeffect [1 2 5]					$ 5145
106243-R-001-001	Whirlpool [1 4]		Right Drain			$ 3919
106243-R-096-001	Combined Whirlpool & Aeroeffect [1 3]					$ 6444
106243-R-103-001	Aeroeffect [1 2 5]					$ 5145

EXHIBIT 7236 IFS AFR DTF - 106244

SKU	System	Color	Configuration	Dimensions & Weight	Packaging	MSRP
106244-000-001-108	Soaker - No System	White	Left Drain	71 7/8” x 36” x 20” / 95 lb	37 ft³	$ 2132
106244-000-001-109			Right Drain			$ 2132
106244-L-001-001	Whirlpool [1 4]		Left Drain			$ 3919
106244-L-096-001	Combined Whirlpool & Aeroeffect [1 3]					$ 6444
106244-L-103-001	Aeroeffect [1 2 5]					$ 5145
106244-R-001-001	Whirlpool [1 4]		Right Drain			$ 3919
106244-R-096-001	Combined Whirlpool & Aeroeffect [1 3]					$ 6444
106244-R-103-001	Aeroeffect [1 2 5]					$ 5145

COMMON OPTIONS

SKU	Description	MSRP
OPT20029-105	Metal trim kit for air push control (factory installed) Available colors: Chrome **(084)** and Brushed Nickel **(105)**	$ 82
OPT20029-084		$ 82
OPT20137-004	Cable-operated waste and overflow (16 in. to 22 in.) (included in product packaging when purchased) Available colors: White **(001)**, Bone **(004)**, Chrome **(084)** and Brushed Nickel **(105)**	$ 362
OPT20137-084		$ 362
OPT20137-105		$ 362
OPT20137-001		$ 362
OPT10019	Removable access panel	$ 419
OPT10053	One chromatherapy light (factory installed) [54]	$ 790
OPT10095	Water heater assembly for whirlpool and combined systems (factory installed)	$ 1033
OPT10106-084	Metal trim kit for whirlpool and combined systems (factory installed) Available colors: Chrome **(084)** and Brushed Nickel **(105)**	$ 728
OPT10106-105		$ 728

ACCESSORIES

SKU	Description	MSRP
10006923	Flexible main hose (9 ft. extension) for air push control air massage - Kit (sold separately)	$ 209
10004306-001	White foam cushion with 2 suction pads (sold separately) Available color: White **(001)**	$ 138
10028641-084	Metal trim kit for Whirlpool and combined systems (sold separately) Available colors: Chrome **(084)** and Brushed Nickel **(105)**	$ 728
10028641-105		$ 728
10034250-084	Metal trim kit for Aeroeffect with Air Push Control (sold separately) Available colors: Chrome **(084)** and Brushed Nickel **(105)**	$ 82
10034250-105		$ 82
10022491-004	Cable-operated waste and overflow (16 in. to 22 in.) (sold separately) Available colors: White **(001)**, Bone **(004)**, Chrome **(084)** and Brushed Nickel **(105)**	$ 362

FOOTNOTES

No	Description
54	A selection of units come with an access panel by default when equipped with a system. However, if the unit is only equipped with chromatherapy, the access panel will not be provided by default.

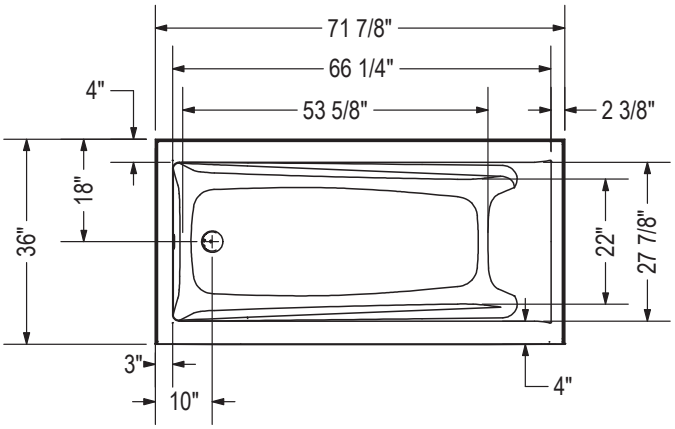

IFS Without System
Single tiling flange

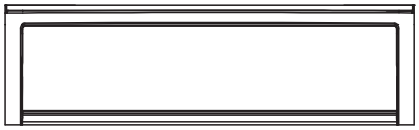

IFS With System
(access panel)
Single tiling flange

1" Single integrated tiling flange (not shown)
2" Double integrated tiling flange (not shown)
Drop-in model (shown)

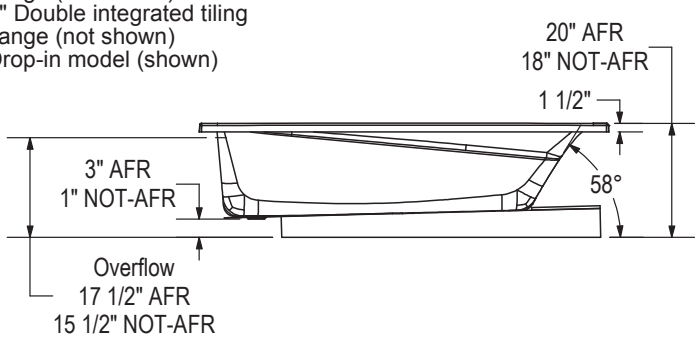

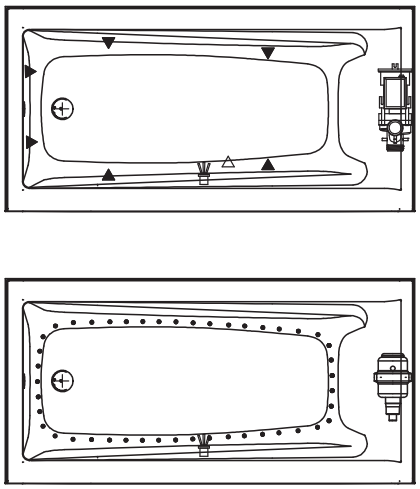

Technical drawing is universal for all Exhibit 7236 configurations.

Wood support design may vary.
Single Integrated tiling flange: 1" height x 1/4'' thickness (not shown)
Double Integrated tiling flange: 2" height (not shown)

All dimensions are approximate.
Structure measurement must be verified against the unit to ensure proper fit.

(▲) : Indicates whirlpool jets positioning
(△) : Indicates suction positioning
(●) : Indicates airjets positioning
(♛) : Indicates chromatherapy light positioning

Exhibit 7242

Material : Acrylic

Features

- Rectangular shape bathtub
- Drop-in or alcove installation with tiling flange
- Minimalist look with discreet armrests and textured floor
- End drain

EXHIBIT 7242 - 106185

SKU	System	Color	Configuration	Dimensions & Weight	Packaging	MSRP
106185-000-001-000	Soaker - No System	White	End Drain	71 7/8” x 42” x 18” / 86 lb	44 ft^3	$ 1912
106185-001-001-000	Whirlpool [1 4]					$ 3699
106185-002-001-100	Multi-Pack [9]					$ 8595
106185-096-001	Combined Whirlpool & Aeroeffect [1 3]					$ 6224
106185-103-001-000	Aeroeffect [1 2 5]					$ 4925

COMMON OPTIONS

SKU	Description	MSRP
OPT10053	One chromatherapy light (factory installed) [54]	$ 790
OPT10095	Water heater assembly for whirlpool and combined systems (factory installed)	$ 1033
OPT10106-084	Metal trim kit for whirlpool and combined systems (factory installed) Available colors: Chrome **(084)** and Brushed Nickel **(105)**	$ 728
OPT10106-105		$ 728
OPT20029-105	Metal trim kit for air push control (factory installed) Available colors: Chrome **(084)** and Brushed Nickel **(105)**	$ 82
OPT20029-084		$ 82
OPT20137-004	Cable-operated waste and overflow (16 in. to 22 in.) (included in product packaging when purchased) Available colors: White **(001)**, Bone **(004)**, Chrome **(084)** and Brushed Nickel **(105)**	$ 362
OPT20137-084		$ 362
OPT20137-105		$ 362
OPT20137-001		$ 362

ACCESSORIES

SKU	Description	MSRP
10006923	Flexible main hose (9 ft. extension) for air push control air massage - Kit (sold separately)	$ 209
10004306-001	White foam cushion with 2 suction pads (sold separately) Available color: White **(001)**	$ 138
10028641-084	Metal trim kit for Whirlpool and combined systems (sold separately) Available colors: Chrome **(084)** and Brushed Nickel **(105)**	$ 728
10028641-105		$ 728
10034250-084	Metal trim kit for Aeroeffect with Air Push Control (sold separately) Available colors: Chrome **(084)** and Brushed Nickel **(105)**	$ 82
10034250-105		$ 82
10022491-004	Cable-operated waste and overflow (16 in. to 22 in.) (sold separately) Available colors: White **(001)**, Bone **(004)**, Chrome **(084)** and Brushed Nickel **(105)**	$ 362

FOOTNOTES

No	Description
1	Components for standard colour units equipped with systems are colour-coordinated. Trim kit and/or air push with metallic finish can be added (additional charge applies). For non-standard colour units, please specify trim kit and/or air push colour (additional charge applies for metallic finishes). Please note that the positioning of the system’s control could be in conflict with the door if one was installed on the unit. To insure compatibility, please contact customer service.

FOOTNOTES

No	Description
2	Please order flexible main hose 10006923 for installation of the blower further than 3 ft from the bathtub. For the Tandem models and the Serenade models (freestanding and drop-in), the blower is always remote and not factory installed so a 9 ft flexible main hose is included. Please note that the positioning of the system's control could be in conflict with the door if one was installed on the unit. To insure compatibility, please contact customer service.
4	For details on pump position and requirements, see technical drawings on https://www.maax.com. When there is a pump position A or B indicated on the technical drawing, please specify position when ordering.
5	For details on blower position and requirements, see technical drawings on https://www.maax.com. When there is a blower position A or B indicated on the technical drawing, please specify position when ordering.
54	A selection of units come with an access panel by default when equipped with a system. However, if the unit is only equipped with chromatherapy, the access panel will not be provided by default.

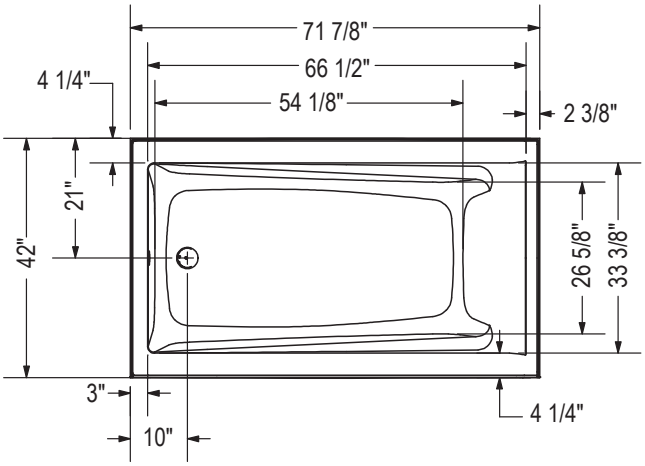

IFS Without System
Single tiling flange

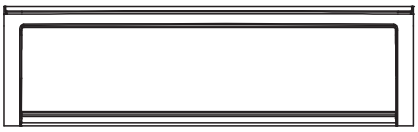

IFS With System
(access panel)
Single tiling flange

1" Single integrated tiling
flange (not shown)
Drop-in model (Shown)

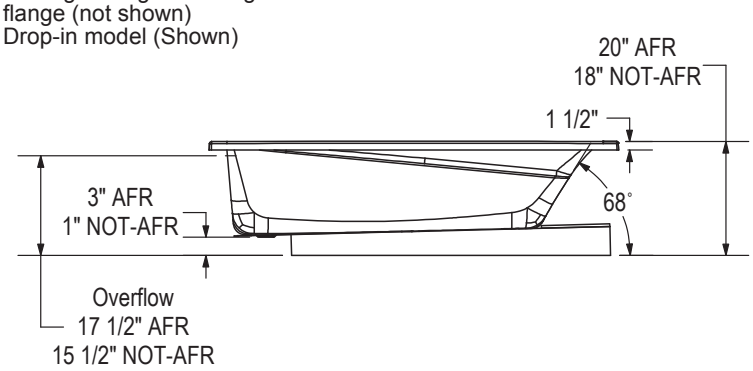

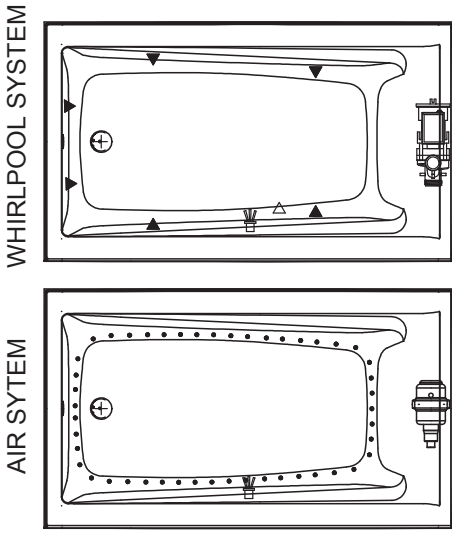

(▲) : Indicates whirlpool jets positioning
(△) : Indicates suction positioning
(●) : Indicates airjets positioning
( ) : Indicates chromatherapy light positioning

Technical drawing is universal for all Exhibit 7242 configurations.

Wood support design may vary.
Single Integrated tiling flange: 1" height x 1/4'' thickness (not shown)

All dimensions are approximate.
Structure measurement must be verified against the unit to ensure proper fit.

Exhibit 7242 IF

Material : Acrylic

Features

- Rectangular shape bathtub
- Drop-in or alcove installation with tiling flange
- Minimalist look with discreet armrests and textured floor
- End drain

EXHIBIT 7242 IF - 106186

SKU	System	Color	Configuration	Dimensions & Weight	Packaging	MSRP
106186-000-001-001	Soaker - No System	White	Left Drain	71 7/8” x 42” x 18” / 86 lb	44 ft³	$ 1912
106186-000-001-002			Right Drain			$ 1912
106186-001-001-001	Whirlpool [1 4]		Left Drain			$ 3699
106186-001-001-002			Right Drain			$ 3699
106186-002-001-101	Multi-Pack [9]		Left Drain			$ 8595
106186-002-001-102			Right Drain			$ 8595
106186-L-096-001	Combined Whirlpool & Aeroeffect [1 3]		Left Drain			$ 6224
106186-L-103-001	Aeroeffect [1 2 5]					$ 4925
106186-R-096-001	Combined Whirlpool & Aeroeffect [1 3]		Right Drain			$ 6224
106186-R-103-001	Aeroeffect [1 2 5]					$ 4925

COMMON OPTIONS

SKU	Description	MSRP
OPT20137-004	Cable-operated waste and overflow (16 in. to 22 in.) (included in product packaging when purchased) Available colors: White **(001)**, Bone **(004)**, Chrome **(084)** and Brushed Nickel **(105)**	$ 362
OPT20137-084		$ 362
OPT20137-105		$ 362
OPT20137-001		$ 362
OPT10053	One chromatherapy light (factory installed) [54]	$ 790
OPT10095	Water heater assembly for whirlpool and combined systems (factory installed)	$ 1033
OPT10106-084	Metal trim kit for whirlpool and combined systems (factory installed) Available colors: Chrome **(084)** and Brushed Nickel **(105)**	$ 728
OPT10106-105		$ 728
OPT20029-105	Metal trim kit for air push control (factory installed) Available colors: Chrome **(084)** and Brushed Nickel **(105)**	$ 82
OPT20029-084		$ 82

ACCESSORIES

SKU	Description	MSRP
10006923	Flexible main hose (9 ft. extension) for air push control air massage - Kit (sold separately)	$ 209
10004306-001	White foam cushion with 2 suction pads (sold separately) Available color: White **(001)**	$ 138
10028641-084	Metal trim kit for Whirlpool and combined systems (sold separately) Available colors: Chrome **(084)** and Brushed Nickel **(105)**	$ 728
10028641-105		$ 728
10034250-084	Metal trim kit for Aeroeffect with Air Push Control (sold separately) Available colors: Chrome **(084)** and Brushed Nickel **(105)**	$ 82
10034250-105		$ 82
10022491-004	Cable-operated waste and overflow (16 in. to 22 in.) (sold separately) Available colors: White **(001)**, Bone **(004)**, Chrome **(084)** and Brushed Nickel **(105)**	$ 362

FOOTNOTES

No	Description
1	Components for standard colour units equipped with systems are colour-coordinated. Trim kit and/or air push with metallic finish can be added (additional charge applies). For non-standard colour units, please specify trim kit and/or air push colour (additional charge applies for metallic finishes). Please note that the positioning of the system's control could be in conflict with the door if one was installed on the unit. To insure compatibility, please contact customer service.
2	Please order flexible main hose 10006923 for installation of the blower further than 3 ft from the bathtub. For the Tandem models and the Serenade models (freestanding and drop-in), the blower is always remote and not factory installed so a 9 ft flexible main hose is included. Please note that the positioning of the system's control could be in conflict with the door if one was installed on the unit. To insure compatibility, please contact customer service.
3	The blower is not factory installed (remote). 9 ft flexible main hose included. Please note that the positioning of the system's control could be in conflict with the door if one was installed on the unit. To insure compatibility, please contact customer service.
4	For details on pump position and requirements, see technical drawings on https://www.maax.com. When there is a pump position A or B indicated on the technical drawing, please specify position when ordering.
5	For details on blower position and requirements, see technical drawings on https://www.maax.com. When there is a blower position A or B indicated on the technical drawing, please specify position when ordering.
54	A selection of units come with an access panel by default when equipped with a system. However, if the unit is only equipped with chromatherapy, the access panel will not be provided by default.

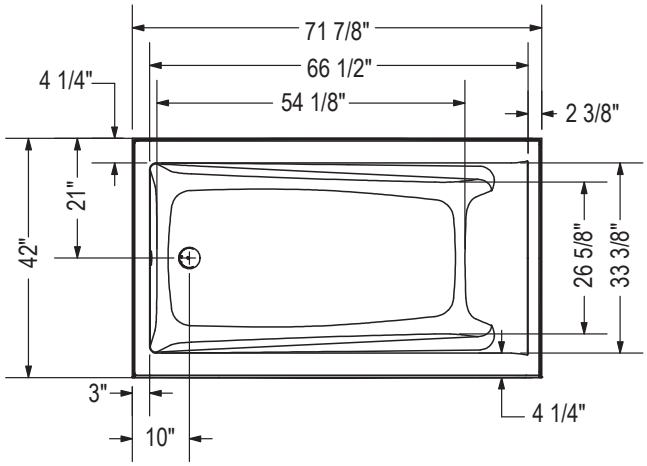

IFS Without System
Single tiling flange

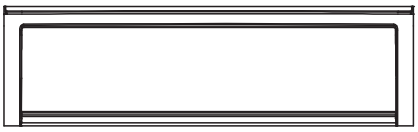

IFS With System
(access panel)
Single tiling flange

1" Single integrated tiling
flange (not shown)
Drop-in model (Shown)

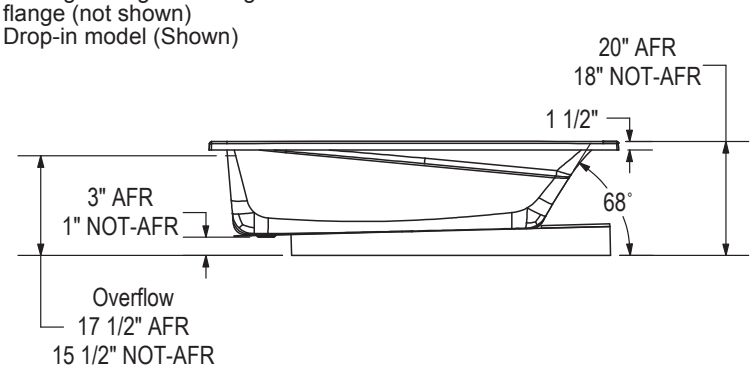

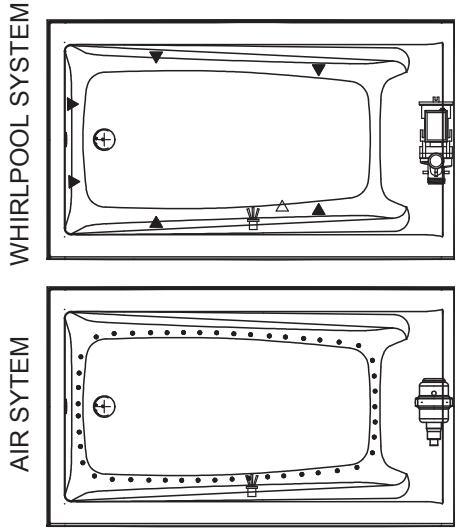

(▲) : Indicates whirlpool jets positioning
(△) : Indicates suction positioning
(●) : Indicates airjets positioning
( ) : Indicates chromatherapy light positioning

Technical drawing is universal for all Exhibit 7242 configurations.

Wood support design may vary.
Single Integrated tiling flange: 1" height x 1/4'' thickness (not shown)

All dimensions are approximate.
Structure measurement must be verified against the unit to ensure proper fit.

Exhibit 7242 IF DTF

Material : Acrylic

Features

- Unique feature: minimalist look with discreet armrests
- Textured bottom
- Alcove installation
- Apron with magnetic access panel available
- Integrated double tiling flange
- Access panel available on IFS models only

EXHIBIT 7242 IF DTF - 106245

SKU	System	Color	Configuration	Dimensions & Weight	Packaging	MSRP
106245-000-001-104	Soaker - No System	White	Left Drain	71 7/8” x 42” x 18” / 86 lb	44 ft³	$ 1912
106245-000-001-105			Right Drain			$ 1912
106245-L-001-001	Whirlpool [1 4]		Left Drain			$ 3699
106245-L-096-001	Combined Whirlpool & Aeroeffect [1 3]					$ 6224
106245-L-103-001	Aeroeffect [1 2 5]					$ 4925
106245-R-001-001	Whirlpool [1 4]		Right Drain			$ 3699
106245-R-096-001	Combined Whirlpool & Aeroeffect [1 3]					$ 6224
106245-R-103-001	Aeroeffect [1 2 5]					$ 4925

COMMON OPTIONS

SKU	Description	MSRP
OPT20029-105	Metal trim kit for air push control (factory installed) Available colors: Chrome **(084)** and Brushed Nickel **(105)**	$ 82
OPT20029-084		$ 82
OPT20137-004	Cable-operated waste and overflow (16 in. to 22 in.) (included in product packaging when purchased) Available colors: White **(001)**, Bone **(004)**, Chrome **(084)** and Brushed Nickel **(105)**	$ 362
OPT20137-084		$ 362
OPT20137-105		$ 362
OPT20137-001		$ 362
OPT10019	Removable access panel	$ 419
OPT10053	One chromatherapy light (factory installed) [54]	$ 790
OPT10095	Water heater assembly for whirlpool and combined systems (factory installed)	$ 1033
OPT10106-084	Metal trim kit for whirlpool and combined systems (factory installed) Available colors: Chrome **(084)** and Brushed Nickel **(105)**	$ 728
OPT10106-105		$ 728

ACCESSORIES

SKU	Description	MSRP
10006923	Flexible main hose (9 ft. extension) for air push control air massage - Kit (sold separately)	$ 209
10004306-001	White foam cushion with 2 suction pads (sold separately) Available color: White **(001)**	$ 138
10028641-084	Metal trim kit for Whirlpool and combined systems (sold separately) Available colors: Chrome **(084)** and Brushed Nickel **(105)**	$ 728
10028641-105		$ 728
10034250-084	Metal trim kit for Aeroeffect with Air Push Control (sold separately) Available colors: Chrome **(084)** and Brushed Nickel **(105)**	$ 82
10034250-105		$ 82
10022491-004	Cable-operated waste and overflow (16 in. to 22 in.) (sold separately) Available colors: White **(001)**, Bone **(004)**, Chrome **(084)** and Brushed Nickel **(105)**	$ 362

FOOTNOTES

No	Description
1	Components for standard colour units equipped with systems are colour-coordinated. Trim kit and/or air push with metallic finish can be added (additional charge applies). For non-standard colour units, please specify trim kit and/or air push colour (additional charge applies for metallic finishes). Please note that the positioning of the system's control could be in conflict with the door if one was installed on the unit. To insure compatibility, please contact customer service.
2	Please order flexible main hose 10006923 for installation of the blower further than 3 ft from the bathtub. For the Tandem models and the Serenade models (freestanding and drop-in), the blower is always remote and not factory installed so a 9 ft flexible main hose is included. Please note that the positioning of the system's control could be in conflict with the door if one was installed on the unit. To insure compatibility, please contact customer service.
3	The blower is not factory installed (remote). 9 ft flexible main hose included. Please note that the positioning of the system's control could be in conflict with the door if one was installed on the unit. To insure compatibility, please contact customer service.
4	For details on pump position and requirements, see technical drawings on https://www.maax.com. When there is a pump position A or B indicated on the technical drawing, please specify position when ordering.
5	For details on blower position and requirements, see technical drawings on https://www.maax.com. When there is a blower position A or B indicated on the technical drawing, please specify position when ordering.
54	A selection of units come with an access panel by default when equipped with a system. However, if the unit is only equipped with chromatherapy, the access panel will not be provided by default.

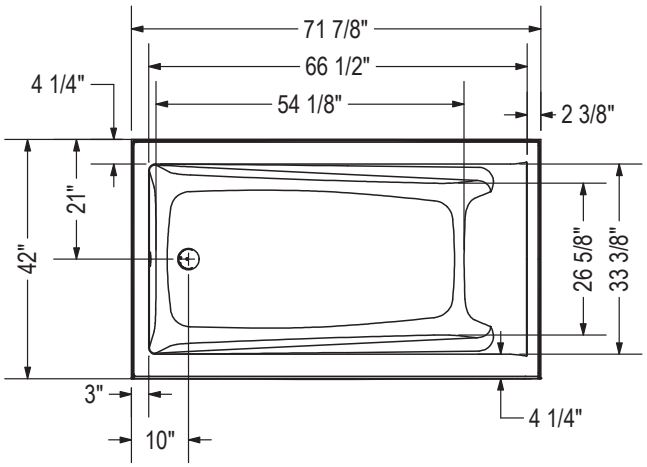

IFS Without System
Single tiling flange

IFS With System
(access panel)
Single tiling flange

1" Single integrated tiling flange (not shown)
2" Double integrated tiling flange (not shown)
Drop-in model (Shown)

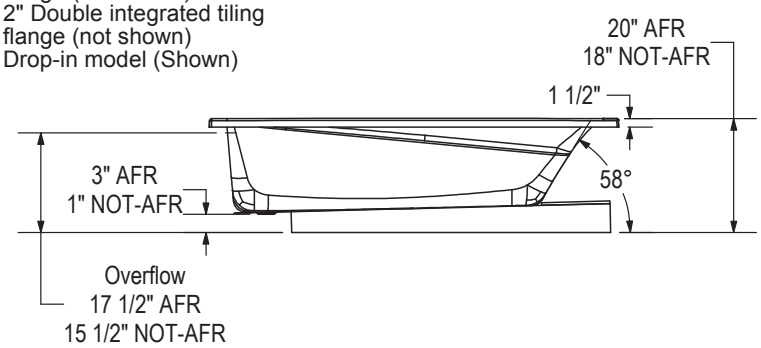

WHIRLPOOL SYSTEM

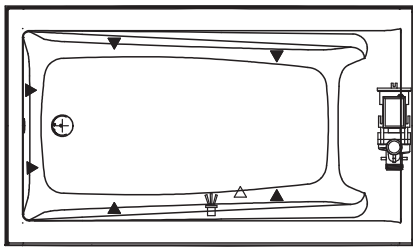

AIR SYSTEM

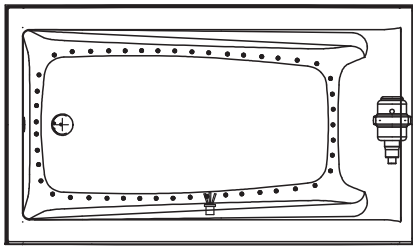

(▲) : Indicates whirlpool jets positioning
(△) : Indicates suction positioning
(●) : Indicates airjets positioning
( ) : Indicates chromatherapy light positioning

Technical drawing is universal for all Exhibit 7242 configurations.

Wood support design may vary.
Single Integrated tiling flange: 1" height x 1/4'' thickness (not shown)
Double Integrated tiling flange: 2" height (not shown)

All dimensions are approximate.
Structure measurement must be verified against the unit to ensure proper fit.

Exhibit 7242 IFS

Material : Acrylic

Features

- Rectangular shape bathtub in alcove installation
- Available in Above-the-Floor Rough (AFR) or not
- Minimalist look with discreet armrests and textured floor
- Integrated tiling flange
- When equipped with a system, the unit comes with an access panel

EXHIBIT 7242 IFS - 106187

SKU	System	Color	Configuration	Dimensions & Weight	Packaging	MSRP
106187-000-001-100	Soaker - No System	White	Left Drain	71 7/8” x 42” x 18” / 98 lb	44 ft³	$ 2297
106187-000-001-101			Right Drain			$ 2297
106187-L-001-001	Whirlpool [1 4]		Left Drain			$ 4084
106187-L-096-001	Combined Whirlpool & Aeroeffect [1 3]					$ 6609
106187-L-103-001	Aeroeffect [1 2 5]					$ 5310
106187-R-001-001	Whirlpool [1 4]		Right Drain			$ 4084
106187-R-096-001	Combined Whirlpool & Aeroeffect [1 3]					$ 6609
106187-R-103-001	Aeroeffect [1 2 5]					$ 5310

EXHIBIT 7242 IFS AFR - 106188

SKU	System	Color	Configuration	Dimensions & Weight	Packaging	MSRP
106188-000-001-102	Soaker - No System	White	Left Drain	71 7/8” x 42” x 20” / 98 lb	44 ft³	$ 2297
106188-000-001-103			Right Drain			$ 2297
106188-001-001-100	Whirlpool [1 4]		Left Drain			$ 4084
106188-001-001-101			Right Drain			$ 4084
106188-L-096-001	Combined Whirlpool & Aeroeffect [1 3]		Left Drain			$ 6609
106188-L-103-001	Aeroeffect [1 2 5]					$ 5310
106188-R-096-001	Combined Whirlpool & Aeroeffect [1 3]		Right Drain			$ 6609
106188-R-103-001	Aeroeffect [1 2 5]					$ 5310

COMMON OPTIONS

SKU	Description	MSRP
OPT20029-105	Metal trim kit for air push control (factory installed) Available colors: Chrome **(084)** and Brushed Nickel **(105)**	$ 82
OPT20029-084		$ 82
OPT20137-004	Cable-operated waste and overflow (16 in. to 22 in.) (included in product packaging when purchased) Available colors: White **(001)**, Bone **(004)**, Chrome **(084)** and Brushed Nickel **(105)**	$ 362
OPT20137-084		$ 362
OPT20137-105		$ 362
OPT20137-001		$ 362
OPT10019	Removable access panel	$ 419
OPT10053	One chromatherapy light (factory installed) [54]	$ 790
OPT10095	Water heater assembly for whirlpool and combined systems (factory installed)	$ 1033
OPT10106-084	Metal trim kit for whirlpool and combined systems (factory installed) Available colors: Chrome **(084)** and Brushed Nickel **(105)**	$ 728
OPT10106-105		$ 728

ACCESSORIES

SKU	Description	MSRP
10006923	Flexible main hose (9 ft. extension) for air push control air massage - Kit (sold separately)	$ 209
10004306-001	White foam cushion with 2 suction pads (sold separately) Available color: White **(001)**	$ 138
10028641-084	Metal trim kit for Whirlpool and combined systems (sold separately) Available colors: Chrome **(084)** and Brushed Nickel **(105)**	$ 728
10028641-105		$ 728
10034250-084	Metal trim kit for Aeroeffect with Air Push Control (sold separately) Available colors: Chrome **(084)** and Brushed Nickel **(105)**	$ 82
10034250-105		$ 82
10022491-004	Cable-operated waste and overflow (16 in. to 22 in.) (sold separately) Available colors: White **(001)**, Bone **(004)**, Chrome **(084)** and Brushed Nickel **(105)**	$ 362

FOOTNOTES

No	Description
1	Components for standard colour units equipped with systems are colour-coordinated. Trim kit and/or air push with metallic finish can be added (additional charge applies). For non-standard colour units, please specify trim kit and/or air push colour (additional charge applies for metallic finishes). Please note that the positioning of the system's control could be in conflict with the door if one was installed on the unit. To insure compatibility, please contact customer service.
2	Please order flexible main hose 10006923 for installation of the blower further than 3 ft from the bathtub. For the Tandem models and the Serenade models (freestanding and drop-in), the blower is always remote and not factory installed so a 9 ft flexible main hose is included. Please note that the positioning of the system's control could be in conflict with the door if one was installed on the unit. To insure compatibility, please contact customer service.
3	The blower is not factory installed (remote). 9 ft flexible main hose included. Please note that the positioning of the system's control could be in conflict with the door if one was installed on the unit. To insure compatibility, please contact customer service.
4	For details on pump position and requirements, see technical drawings on https://www.maax.com. When there is a pump position A or B indicated on the technical drawing, please specify position when ordering.
5	For details on blower position and requirements, see technical drawings on https://www.maax.com. When there is a blower position A or B indicated on the technical drawing, please specify position when ordering.
54	A selection of units come with an access panel by default when equipped with a system. However, if the unit is only equipped with chromatherapy, the access panel will not be provided by default.

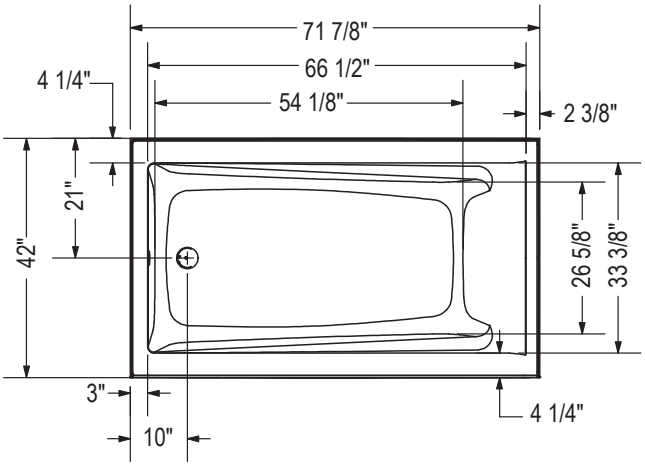

IFS Without System
Single tiling flange

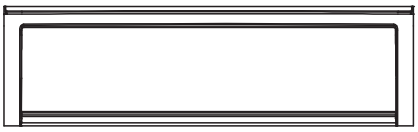

IFS With System
(access panel)
Single tiling flange

1" Single integrated tiling
flange (not shown)
Drop-in model (Shown)

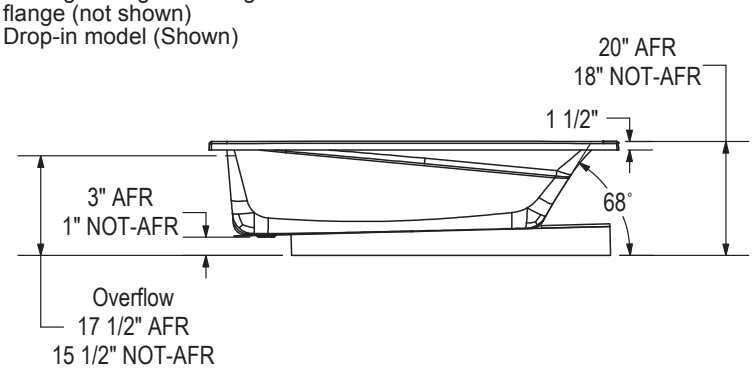

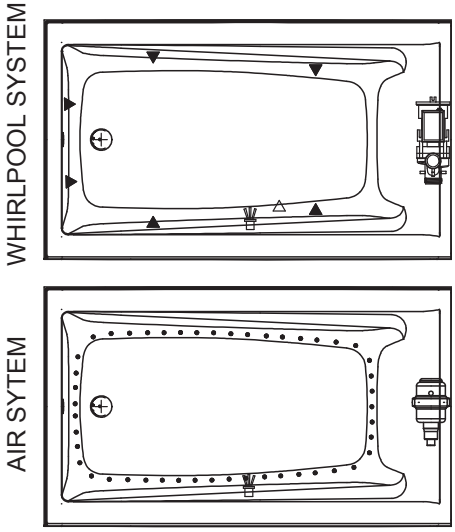

(▲) : Indicates whirlpool jets positioning
(△) : Indicates suction positioning
(●) : Indicates airjets positioning
( ) : Indicates chromatherapy light positioning

Technical drawing is universal for all Exhibit 7242 configurations.

Wood support design may vary.
Single Integrated tiling flange: 1" height x 1/4'' thickness (not shown)

All dimensions are approximate.
Structure measurement must be verified against the unit to ensure proper fit.

Exhibit 7242 IFS DTF

Material : Acrylic

Features

- Rectangular shape bathtub in alcove installation
- Available in Above-the-Floor Rough (AFR) or not
- Minimalist look with discreet armrests and textured floor
- Integrated tiling flange
- When equipped with a system, the unit comes with an access panel

EXHIBIT 7242 IFS DTF - 106246

SKU	System	Color	Configuration	Dimensions & Weight	Packaging	MSRP
106246-000-001-106	Soaker - No System	White	Left Drain	71 7/8” x 42” x 18” / 98 lb	44 ft³	$ 2297
106246-000-001-107			Right Drain			$ 2297
106246-L-001-001	Whirlpool [1 4]		Left Drain			$ 4084
106246-L-096-001	Combined Whirlpool & Aeroeffect [1 3]					$ 6609
106246-L-103-001	Aeroeffect [1 2 5]					$ 5310
106246-R-001-001	Whirlpool [1 4]		Right Drain			$ 4084
106246-R-096-001	Combined Whirlpool & Aeroeffect [1 3]					$ 6609
106246-R-103-001	Aeroeffect [1 2 5]					$ 5310

EXHIBIT 7242 IFS AFR DTF - 106247

SKU	System	Color	Configuration	Dimensions & Weight	Packaging	MSRP
106247-000-001-108	Soaker - No System	White	Left Drain	71 7/8” x 42” x 20” / 98 lb	44 ft³	$ 2297
106247-000-001-109			Right Drain			$ 2297
106247-L-001-001	Whirlpool [1 4]		Left Drain			$ 4084
106247-L-096-001	Combined Whirlpool & Aeroeffect [1 3]					$ 6609
106247-L-103-001	Aeroeffect [1 2 5]					$ 5310
106247-R-001-001	Whirlpool [1 4]		Right Drain			$ 4084
106247-R-096-001	Combined Whirlpool & Aeroeffect [1 3]					$ 6609
106247-R-103-001	Aeroeffect [1 2 5]					$ 5310

COMMON OPTIONS

SKU	Description	MSRP
OPT20029-105	Metal trim kit for air push control (factory installed) Available colors: Chrome **(084)** and Brushed Nickel **(105)**	$ 82
OPT20029-084		$ 82
OPT20137-004	Cable-operated waste and overflow (16 in. to 22 in.) (included in product packaging when purchased) Available colors: White **(001)**, Bone **(004)**, Chrome **(084)** and Brushed Nickel **(105)**	$ 362
OPT20137-084		$ 362
OPT20137-105		$ 362
OPT20137-001		$ 362
OPT10019	Removable access panel	$ 419
OPT10053	One chromatherapy light (factory installed) [54]	$ 790
OPT10095	Water heater assembly for whirlpool and combined systems (factory installed)	$ 1033
OPT10106-084	Metal trim kit for whirlpool and combined systems (factory installed) Available colors: Chrome **(084)** and Brushed Nickel **(105)**	$ 728
OPT10106-105		$ 728

ACCESSORIES

SKU	Description	MSRP
10006923	Flexible main hose (9 ft. extension) for air push control air massage - Kit (sold separately)	$ 209
10004306-001	White foam cushion with 2 suction pads (sold separately) Available color: White **(001)**	$ 138
10028641-084	Metal trim kit for Whirlpool and combined systems (sold separately) Available colors: Chrome **(084)** and Brushed Nickel **(105)**	$ 728
10028641-105		$ 728
10034250-084	Metal trim kit for Aeroeffect with Air Push Control (sold separately) Available colors: Chrome **(084)** and Brushed Nickel **(105)**	$ 82
10034250-105		$ 82
10022491-004	Cable-operated waste and overflow (16 in. to 22 in.) (sold separately) Available colors: White **(001)**, Bone **(004)**, Chrome **(084)** and Brushed Nickel **(105)**	$ 362

FOOTNOTES

No	Description
54	A selection of units come with an access panel by default when equipped with a system. However, if the unit is only equipped with chromatherapy, the access panel will not be provided by default.

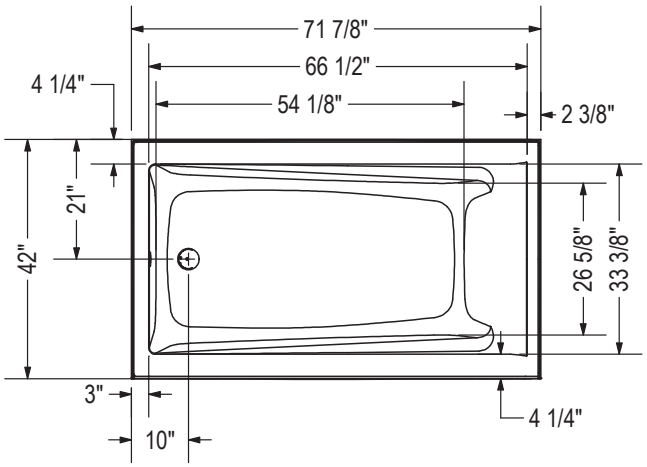

IFS Without System
Single tiling flange

IFS With System
(access panel)
Single tiling flange

1" Single integrated tiling flange (not shown)
2" Double integrated tiling flange (not shown)
Drop-in model (Shown)

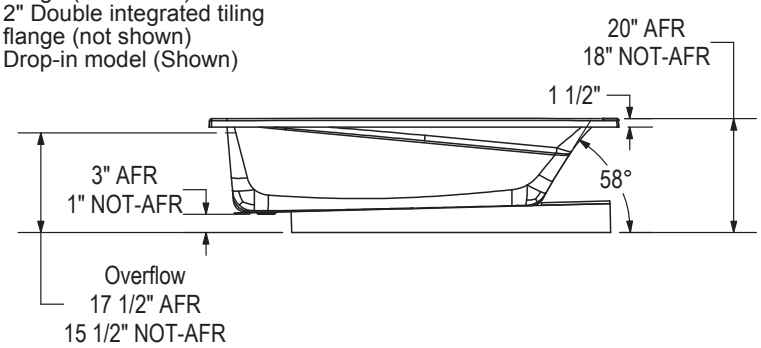

WHIRLPOOL SYSTEM

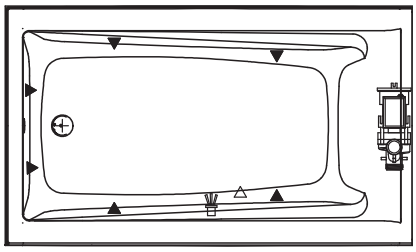

AIR SYSTEM

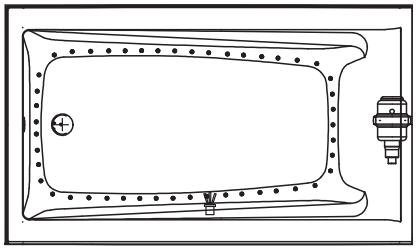

(▲) : Indicates whirlpool jets positioning
(△) : Indicates suction positioning
(●) : Indicates airjets positioning
( ) : Indicates chromatherapy light positioning

Technical drawing is universal for all Exhibit 7242 configurations.

Wood support design may vary.
Single Integrated tiling flange: 1" height x 1/4'' thickness (not shown)
Double Integrated tiling flange: 2" height (not shown)

All dimensions are approximate.
Structure measurement must be verified against the unit to ensure proper fit.

Pose 6030 - Corner left

Material : Acrylic

Features

- Rectangular shape bathtub with choices of two deck heights (3/8 or 2 in.) Please specify when ordering.
- Integrated flange (IF) for corner installation
- Textured floor
- Ample deck space for faucet installation
- Right or left drain available

POSE 6030 IF - 106199

SKU	System	Color	Configuration	Dimensions & Weight	Packaging	MSRP
106199-000-001-105	Soaker - No System	White	Left Drain	59 5/8” x 29 7/8” x 21 5/8” / 57 lb	26 ft³	$ 1320
106199-000-001-106			Right Drain			$ 1320
106199-L-001-001	Whirlpool [1 4]		Left Drain			$ 3107
106199-L-096-001	Combined Whirlpool & Aeroeffect [1 3]					$ 5632
106199-L-103-001	Aeroeffect [1 2 5]					$ 4333
106199-R-001-001	Whirlpool [1 4]		Right Drain			$ 3107
106199-R-096-001	Combined Whirlpool & Aeroeffect [1 3]					$ 5632
106199-R-103-001	Aeroeffect [1 2 5]					$ 4333

POSE 6030 IF - 106200

SKU	System	Color	Configuration	Dimensions & Weight	Packaging	MSRP
106200-000-001-107	Soaker - No System	White	Left Drain	59 5/8” x 29 7/8” x 21 5/8” / 57 lb	26 ft³	$ 1320
106200-000-001-108			Right Drain			$ 1320
106200-L-001-001	Whirlpool [1 4]		Left Drain			$ 3107
106200-L-096-001	Combined Whirlpool & Aeroeffect [1 3]					$ 5632
106200-L-103-001	Aeroeffect [1 2 5]					$ 4333
106200-R-001-001	Whirlpool [1 4]		Right Drain			$ 3107
106200-R-096-001	Combined Whirlpool & Aeroeffect [1 3]					$ 5632
106200-R-103-001	Aeroeffect [1 2 5]					$ 4333

COMMON OPTIONS

SKU	Description	MSRP
OPT10106-084	Metal trim kit for whirlpool and combined systems (factory installed) Available colors: Chrome **(084)** and Brushed Nickel **(105)**	$ 728
OPT10106-105		$ 728
OPT10260-084	Two 6-in. acrylic grab bars (factory installed) [8] Available colors: White **(001)**, Bone **(004)**, Biscuit **(007)**, Chrome **(084)** and Brushed Nickel **(105)**	$ 392
OPT10260-007		$ 392
OPT10260-004		$ 392
OPT10260-105		$ 392
OPT10260-001		$ 392
OPT20029-105	Metal trim kit for air push control (factory installed) Available colors: Chrome **(084)** and Brushed Nickel **(105)**	$ 82
OPT20029-084		$ 82
OPT20137-004	Cable-operated waste and overflow (16 in. to 22 in.) (included in product packaging when purchased) Available colors: White **(001)**, Bone **(004)**, Chrome **(084)** and Brushed Nickel **(105)**	$ 362
OPT20137-084		$ 362
OPT20137-105		$ 362
OPT20137-001		$ 362

COMMON OPTIONS

SKU	Description	MSRP
OPT20205	Lite option 3/8 in. thin deck [6] When chosen, this option is offered at no cost	$ 0
OPT10053	One chromatherapy light (factory installed) [54]	$ 790
OPT10095	Water heater assembly for whirlpool and combined systems (factory installed)	$ 1033

ACCESSORIES

SKU	Description	MSRP
10006923	Flexible main hose (9 ft. extension) for air push control air massage - Kit (sold separately)	$ 209
10004306-001	White foam cushion with 2 suction pads (sold separately) Available color: White **(001)**	$ 138
10028641-084	Metal trim kit for Whirlpool and combined systems (sold separately) Available colors: Chrome **(084)** and Brushed Nickel **(105)**	$ 728
10028641-105		$ 728
10034250-084	Metal trim kit for Aeroeffect with Air Push Control (sold separately) Available colors: Chrome **(084)** and Brushed Nickel **(105)**	$ 82
10034250-105		$ 82
10022491-004	Cable-operated waste and overflow (16 in. to 22 in.) (sold separately) Available colors: White **(001)**, Bone **(004)**, Chrome **(084)** and Brushed Nickel **(105)**	$ 362

FOOTNOTES

No	Description
1	Components for standard colour units equipped with systems are colour-coordinated. Trim kit and/or air push with metallic finish can be added (additional charge applies). For non-standard colour units, please specify trim kit and/or air push colour (additional charge applies for metallic finishes). Please note that the positioning of the system's control could be in conflict with the door if one was installed on the unit. To insure compatibility, please contact customer service.
2	Please order flexible main hose 10006923 for installation of the blower further than 3 ft from the bathtub. For the Tandem models and the Serenade models (freestanding and drop-in), the blower is always remote and not factory installed so a 9 ft flexible main hose is included. Please note that the positioning of the system's control could be in conflict with the door if one was installed on the unit. To insure compatibility, please contact customer service.
3	The blower is not factory installed (remote). 9 ft flexible main hose included. Please note that the positioning of the system's control could be in conflict with the door if one was installed on the unit. To insure compatibility, please contact customer service.
4	For details on pump position and requirements, see technical drawings on https://www.maax.com. When there is a pump position A or B indicated on the technical drawing, please specify position when ordering.
5	For details on blower position and requirements, see technical drawings on https://www.maax.com. When there is a blower position A or B indicated on the technical drawing, please specify position when ordering.
6	Specify 3/8 (Lite option) or 2 in. on deck height. If ordering unit with an apron, only 2 in. deck height is available.
8	Two 6 in. or 12 in. metal or acrylic grab bars are optional. Factory installed, only one positioning is possible (see technical drawings on https://www.maax.com).
54	A selection of units come with an access panel by default when equipped with a system. However, if the unit is only equipped with chromatherapy, the access panel will not be provided by default.

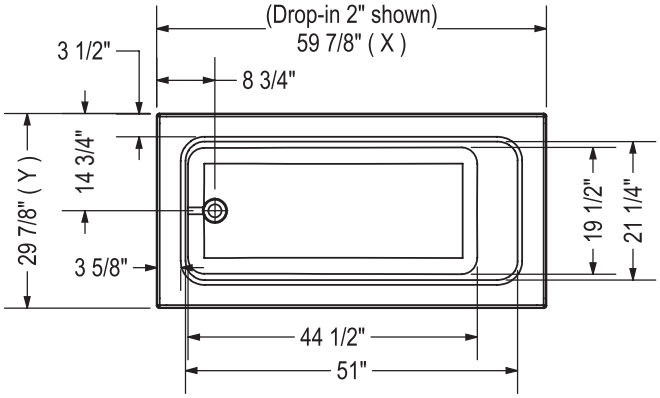

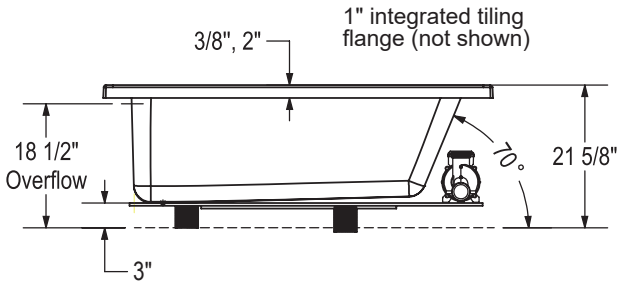

WHIRLPOOL SYSTEM

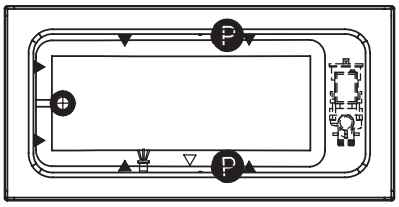

AIR SYSTEM

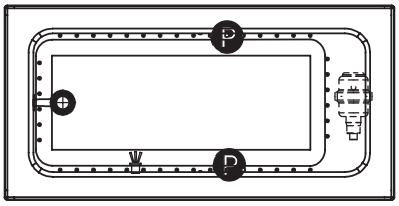

(P) : Indicates optional grab bar positioning
(▲) : Indicates whirlpool jets positioning
(●) : Indicates Aerofeel airjets positioning
(△) : Indicates suction positioning
( ) : Indicates chromatherapy light positioning

	DROP IN 2"	DROP IN 3/8"	ALCOVE / CORNER
X	59 7/8"	59 3/4"	59 5/8"
Y	29 7/8"	29 3/4"	29 7/8"

APRON (alcove version only)

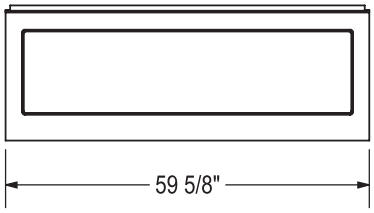

Technical drawing is universal for all 6030 configurations.
External dimension (X,Y) vary depending on configuration (see chart)

Wood support design may vary.
Integrated tiling flange: 1" height X 1/4" thickness (not shown)
Tiling flange position is determined by chosen configuration.

All dimensions are approximate.
Structure measurement must be verified against the unit to ensure proper fit.

Pose 6030 IF

Material : Acrylic

Features

- Rectangular shape bathtub with choices of two deck heights (3/8 or 2 in.) Please specify when ordering
- Drop-in or undermount [10] installation; model also available with integrated flange (IF) for alcove installation
- Textured floor
- Ample deck space for faucet installation
- Skirt with or without access panel available

POSE 6030 - 101456

SKU	System	Color	Configuration	Dimensions & Weight	Packaging	MSRP
101456-000-001-100	Soaker - No System	White	End Drain	59 7/8” x 29 7/8” x 21 5/8” / 57 lb	26 ft³	$ 1320
101456-001-001-100	Whirlpool [1 4]					$ 3107
101456-002-001-100	Multi-Pack [9]					$ 5935
101456-096-001-100	Combined Whirlpool & Aeroeffect [1 3]					$ 5632
101456-103-001-100	Aeroeffect [1 2 5]					$ 4333

POSE 6030 IF - 106198

SKU	System	Color	Configuration	Dimensions & Weight	Packaging	MSRP
106198-000-001-103	Soaker - No System	White	Left Drain	59 5/8” x 29 7/8” x 21 5/8” / 57 lb	26 ft³	$ 1320
106198-000-001-104			Right Drain			$ 1320
106198-002-001-101	Multi-Pack [9]		Left Drain			$ 5935
106198-002-001-102			Right Drain			$ 5935
106198-L-001-001	Whirlpool [1 4]		Left Drain			$ 3107
106198-L-096-001	Combined Whirlpool & Aeroeffect [1 3]					$ 5632
106198-L-103-001	Aeroeffect [1 2 5]					$ 4333
106198-R-001-001	Whirlpool [1 4]		Right Drain			$ 3107
106198-R-096-001	Combined Whirlpool & Aeroeffect [1 3]					$ 5632
106198-R-103-001	Aeroeffect [1 2 5]					$ 4333

COMMON OPTIONS

SKU	Description	MSRP
OPT10260-084	Two 6-in. acrylic grab bars (factory installed) [8] Available colors: White **(001)**, Bone **(004)**, Biscuit **(007)**, Chrome **(084)** and Brushed Nickel **(105)**	$ 392
OPT10260-007		$ 392
OPT10260-004		$ 392
OPT10260-105		$ 392
OPT10260-001		$ 392
OPT20029-105	Metal trim kit for air push control (factory installed) Available colors: Chrome **(084)** and Brushed Nickel **(105)**	$ 82
OPT20029-084		$ 82
OPT20137-004	Cable-operated waste and overflow (16 in. to 22 in.) (included in product packaging when purchased) Available colors: White **(001)**, Bone **(004)**, Chrome **(084)** and Brushed Nickel **(105)**	$ 362
OPT20137-084		$ 362
OPT20137-105		$ 362
OPT20137-001		$ 362
OPT10053	One chromatherapy light (factory installed) [54]	$ 790
OPT10095	Water heater assembly for whirlpool and combined systems (factory installed)	$ 1033
OPT10106-084	Metal trim kit for whirlpool and combined systems (factory installed) Available colors: Chrome **(084)** and Brushed Nickel **(105)**	$ 728

COMMON OPTIONS

SKU	Description	MSRP
OPT10106-105	Metal trim kit for whirlpool and combined systems (factory installed) Available colors: Chrome **(084)** and Brushed Nickel **(105)**	$ 728
OPT20205	Lite option 3/8 in. thin deck [6] When chosen, this option is offered at no cost	$ 0

ACCESSORIES

SKU	Description	MSRP
10006923	Flexible main hose (9 ft. extension) for air push control air massage - Kit (sold separately)	$ 209
10004306-001	White foam cushion with 2 suction pads (sold separately) Available color: White **(001)**	$ 138
10028641-084	Metal trim kit for Whirlpool and combined systems (sold separately) Available colors: Chrome **(084)** and Brushed Nickel **(105)**	$ 728
10028641-105		$ 728
10034250-084	Metal trim kit for Aeroeffect with Air Push Control (sold separately) Available colors: Chrome **(084)** and Brushed Nickel **(105)**	$ 82
10034250-105		$ 82
10022491-004	Cable-operated waste and overflow (16 in. to 22 in.) (sold separately) Available colors: White **(001)**, Bone **(004)**, Chrome **(084)** and Brushed Nickel **(105)**	$ 362

FOOTNOTES

No	Description
1	Components for standard colour units equipped with systems are colour-coordinated. Trim kit and/or air push with metallic finish can be added (additional charge applies). For non-standard colour units, please specify trim kit and/or air push colour (additional charge applies for metallic finishes). Please note that the positioning of the system's control could be in conflict with the door if one was installed on the unit. To insure compatibility, please contact customer service.
2	Please order flexible main hose 10006923 for installation of the blower further than 3 ft from the bathtub. For the Tandem models and the Serenade models (freestanding and drop-in), the blower is always remote and not factory installed so a 9 ft flexible main hose is included. Please note that the positioning of the system's control could be in conflict with the door if one was installed on the unit. To insure compatibility, please contact customer service.
3	The blower is not factory installed (remote). 9 ft flexible main hose included. Please note that the positioning of the system's control could be in conflict with the door if one was installed on the unit. To insure compatibility, please contact customer service.
4	For details on pump position and requirements, see technical drawings on https://www.maax.com. When there is a pump position A or B indicated on the technical drawing, please specify position when ordering.
5	For details on blower position and requirements, see technical drawings on https://www.maax.com. When there is a blower position A or B indicated on the technical drawing, please specify position when ordering.
6	Specify 3/8 (Lite option) or 2 in. on deck height. If ordering unit with an apron, only 2 in. deck height is available.
8	Two 6 in. or 12 in. metal or acrylic grab bars are optional. Factory installed, only one positioning is possible (see technical drawings on https://www.maax.com).
10	Systems not available with units installed undermount.
54	A selection of units come with an access panel by default when equipped with a system. However, if the unit is only equipped with chromatherapy, the access panel will not be provided by default.

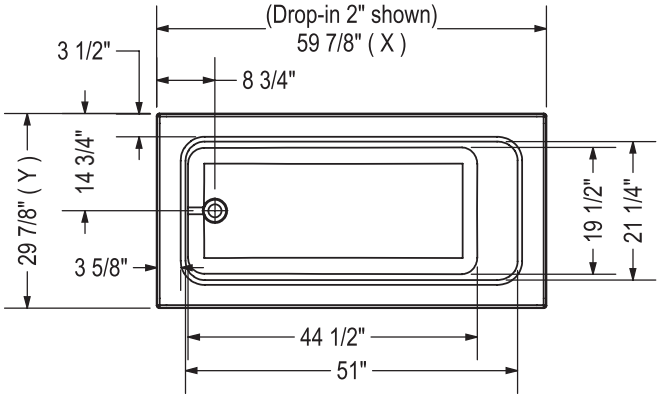

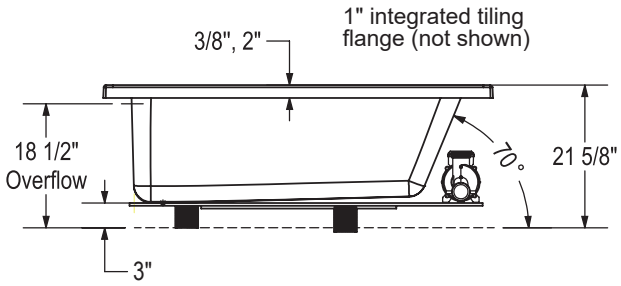

WHIRLPOOL SYSTEM

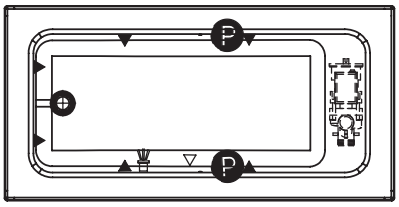

AIR SYSTEM

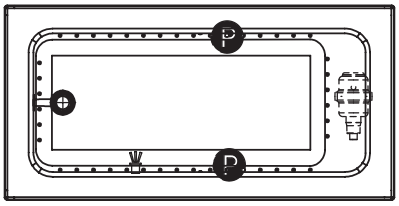

(P) : Indicates optional grab bar positioning
(▲) : Indicates whirlpool jets positioning
(●) : Indicates Aerofeel airjets positioning
(△) : Indicates suction positioning
( ) : Indicates chromatherapy light positioning

	DROP IN 2"	DROP IN 3/8"	ALCOVE / CORNER
X	59 7/8"	59 3/4"	59 5/8"
Y	29 7/8"	29 3/4"	29 7/8"

APRON (alcove version only)

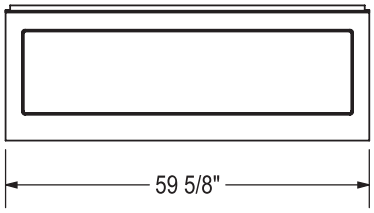

Technical drawing is universal for all 6030 configurations.
External dimension (X,Y) vary depending on configuration (see chart)

Wood support design may vary.
Integrated tiling flange: 1" height X 1/4" thickness (not shown)
Tiling flange position is determined by chosen configuration.

All dimensions are approximate.
Structure measurement must be verified against the unit to ensure proper fit.

Pose 6032 - Corner left

Material : Acrylic

Features

- Rectangular shape bathtub with choices of two deck heights (3/8 or 2 in.) Please specify when ordering.
- Integrated flange (IF) for corner installation
- Textured floor
- Ample deck space for faucet installation
- Right or left drain available

POSE 6032 IF - 106202

SKU	System	Color	Configuration	Dimensions & Weight	Packaging	MSRP
106202-000-001-113	Soaker - No System	White	Left Drain	59 5/8” x 31 5/8” x 23 5/8” / 61 lb	32 ft³	$ 1408
106202-000-001-114			Right Drain			$ 1408
106202-L-001-001	Whirlpool [1 4]		Left Drain			$ 3195
106202-L-096-001	Combined Whirlpool & Aeroeffect [1 3]					$ 5720
106202-L-103-001	Aeroeffect [1 2 5]					$ 4421
106202-R-001-001	Whirlpool [1 4]		Right Drain			$ 3195
106202-R-096-001	Combined Whirlpool & Aeroeffect [1 3]					$ 5720
106202-R-103-001	Aeroeffect [1 2 5]					$ 4421

POSE 6032 IF - 106203

SKU	System	Color	Configuration	Dimensions & Weight	Packaging	MSRP
106203-000-001-115	Soaker - No System	White	Left Drain	59 5/8” x 31 5/8” x 23 5/8” / 61 lb	32 ft³	$ 1408
106203-000-001-116			Right Drain			$ 1408
106203-L-001-001	Whirlpool [1 4]		Left Drain			$ 3195
106203-L-096-001	Combined Whirlpool & Aeroeffect [1 3]					$ 5720
106203-L-103-001	Aeroeffect [1 2 5]					$ 4421
106203-R-001-001	Whirlpool [1 4]		Right Drain			$ 3195
106203-R-096-001	Combined Whirlpool & Aeroeffect [1 3]					$ 5720
106203-R-103-001	Aeroeffect [1 2 5]					$ 4421

COMMON OPTIONS

SKU	Description	MSRP
OPT10106-084	Metal trim kit for whirlpool and combined systems (factory installed) Available colors: Chrome **(084)** and Brushed Nickel **(105)**	$ 728
OPT10106-105		$ 728
OPT10260-084	Two 6-in. acrylic grab bars (factory installed) [8] Available colors: White **(001)**, Bone **(004)**, Biscuit **(007)**, Chrome **(084)** and Brushed Nickel **(105)**	$ 392
OPT10260-007		$ 392
OPT10260-004		$ 392
OPT10260-105		$ 392
OPT10260-001		$ 392
OPT20029-105	Metal trim kit for air push control (factory installed) Available colors: Chrome **(084)** and Brushed Nickel **(105)**	$ 82
OPT20029-084		$ 82
OPT20137-004	Cable-operated waste and overflow (16 in. to 22 in.) (included in product packaging when purchased) Available colors: White **(001)**, Bone **(004)**, Chrome **(084)** and Brushed Nickel **(105)**	$ 362
OPT20137-084		$ 362
OPT20137-105		$ 362
OPT20137-001		$ 362

COMMON OPTIONS

SKU	Description	MSRP
OPT20205	Lite option 3/8 in. thin deck [6] When chosen, this option is offered at no cost	$ 0
OPT10053	One chromatherapy light (factory installed) [54]	$ 790
OPT10095	Water heater assembly for whirlpool and combined systems (factory installed)	$ 1033

ACCESSORIES

SKU	Description	MSRP
10006923	Flexible main hose (9 ft. extension) for air push control air massage - Kit (sold separately)	$ 209
10004306-001	White foam cushion with 2 suction pads (sold separately) Available color: White **(001)**	$ 138
10028641-084	Metal trim kit for Whirlpool and combined systems (sold separately) Available colors: Chrome **(084)** and Brushed Nickel **(105)**	$ 728
10028641-105		$ 728
10034250-084	Metal trim kit for Aeroeffect with Air Push Control (sold separately) Available colors: Chrome **(084)** and Brushed Nickel **(105)**	$ 82
10034250-105		$ 82
10022491-004	Cable-operated waste and overflow (16 in. to 22 in.) (sold separately) Available colors: White **(001)**, Bone **(004)**, Chrome **(084)** and Brushed Nickel **(105)**	$ 362

FOOTNOTES

No	Description
1	Components for standard colour units equipped with systems are colour-coordinated. Trim kit and/or air push with metallic finish can be added (additional charge applies). For non-standard colour units, please specify trim kit and/or air push colour (additional charge applies for metallic finishes). Please note that the positioning of the system's control could be in conflict with the door if one was installed on the unit. To insure compatibility, please contact customer service.
2	Please order flexible main hose 10006923 for installation of the blower further than 3 ft from the bathtub. For the Tandem models and the Serenade models (freestanding and drop-in), the blower is always remote and not factory installed so a 9 ft flexible main hose is included. Please note that the positioning of the system's control could be in conflict with the door if one was installed on the unit. To insure compatibility, please contact customer service.
3	The blower is not factory installed (remote). 9 ft flexible main hose included. Please note that the positioning of the system's control could be in conflict with the door if one was installed on the unit. To insure compatibility, please contact customer service.
4	For details on pump position and requirements, see technical drawings on https://www.maax.com. When there is a pump position A or B indicated on the technical drawing, please specify position when ordering.
5	For details on blower position and requirements, see technical drawings on https://www.maax.com. When there is a blower position A or B indicated on the technical drawing, please specify position when ordering.
6	Specify 3/8 (Lite option) or 2 in. on deck height. If ordering unit with an apron, only 2 in. deck height is available.
8	Two 6 in. or 12 in. metal or acrylic grab bars are optional. Factory installed, only one positioning is possible (see technical drawings on https://www.maax.com).
54	A selection of units come with an access panel by default when equipped with a system. However, if the unit is only equipped with chromatherapy, the access panel will not be provided by default.

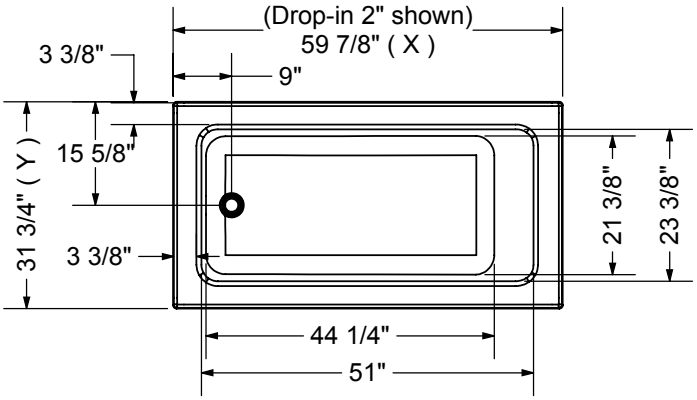

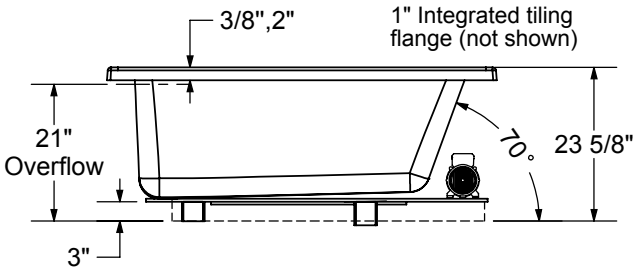

WHIRLPOOL SYSTEM

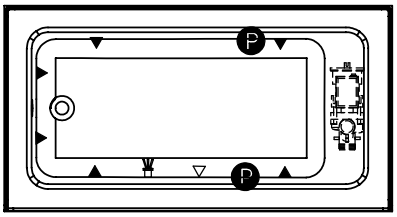

AIR SYSTEM

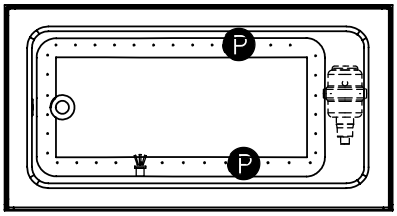

P : Indicates optional grab bar positioning
(▲) : Indicates whirlpool jets positioning
(△) : Indicates suction positioning
(●) : Indicates airjets positioning
( ) : Indicates chromatherapy light positioning

	DROP IN 2"	DROP IN 3/8"	ALCOVE / CORNER
X	59 7/8"	59 3/4"	59 5/8"
Y	31 3/4"	31 5/8"	31 5/8"

APRON (alcove version only)

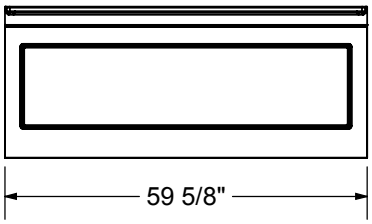

Technical drawing is universal for all 6032 configurations.
External dimension (X,Y) vary depending on configuration (see chart)

Wood support design may vary.
Integrated tiling flange: 1" height X 1/4" thickness (not shown)
Tiling flange position is determined by chosen configuration.

All dimensions are approximate.
Structure measurement must be verified against the unit to ensure proper fit.

Pose 6032 IF

Material : Acrylic

Features

- Rectangular shape bathtub with choices of two deck heights (3/8 or 2 in.) Please specify when ordering
- Drop-in or undermount [10] installation; model also available with integrated flange (IF) for alcove installation
- Textured floor
- Ample deck space for faucet installation
- Skirt with or without access panel available

POSE 6032 - 101457

SKU	System	Color	Configuration	Dimensions & Weight	Packaging	MSRP
101457-000-001-100	Soaker - No System	White	End Drain	59 7/8” x 31 3/4” x 23 5/8” / 61 lb	32 ft³	$ 1408
101457-001-001-100	Whirlpool [1 4]					$ 3195
101457-002-001-100	Multi-Pack [9]					$ 6335
101457-096-001-100	Combined Whirlpool & Aeroeffect [1 3]					$ 5720
101457-103-001-100	Aeroeffect [1 2 5]					$ 4421

POSE 6032 IF - 106201

SKU	System	Color	Configuration	Dimensions & Weight	Packaging	MSRP
106201-000-001-111	Soaker - No System	White	Left Drain	59 5/8” x 31 5/8” x 23 5/8” / 61 lb	32 ft³	$ 1408
106201-000-001-112			Right Drain			$ 1408
106201-002-001-102	Multi-Pack [9]		Left Drain			$ 6335
106201-002-001-103			Right Drain			$ 6335
106201-L-001-001	Whirlpool [1 4]		Left Drain			$ 3195
106201-L-096-001	Combined Whirlpool & Aeroeffect [1 3]					$ 5720
106201-L-103-001	Aeroeffect [1 2 5]					$ 4421
106201-R-001-001	Whirlpool [1 4]		Right Drain			$ 3195
106201-R-096-001	Combined Whirlpool & Aeroeffect [1 3]					$ 5720
106201-R-103-001	Aeroeffect [1 2 5]					$ 4421

COMMON OPTIONS

SKU	Description	MSRP
OPT10095	Water heater assembly for whirlpool and combined systems (factory installed)	$ 1033
OPT10106-084	Metal trim kit for whirlpool and combined systems (factory installed) Available colors: Chrome **(084)** and Brushed Nickel **(105)**	$ 728
OPT10106-105		$ 728
OPT10260-084	Two 6-in. acrylic grab bars (factory installed) [8] Available colors: White **(001)**, Bone **(004)**, Biscuit **(007)**, Chrome **(084)** and Brushed Nickel **(105)**	$ 392
OPT10260-007		$ 392
OPT10260-004		$ 392
OPT10260-105		$ 392
OPT10260-001		$ 392
OPT20029-105	Metal trim kit for air push control (factory installed) Available colors: Chrome **(084)** and Brushed Nickel **(105)**	$ 82
OPT20029-084		$ 82
OPT20137-004	Cable-operated waste and overflow (16 in. to 22 in.) (included in product packaging when purchased) Available colors: White **(001)**, Bone **(004)**, Chrome **(084)** and Brushed Nickel **(105)**	$ 362
OPT20137-084		$ 362
OPT20137-105		$ 362
OPT20137-001		$ 362

COMMON OPTIONS

SKU	Description	MSRP
OPT10053	One chromatherapy light (factory installed) [54]	$ 790
101953-000-001-100	Acrylic apron without access panel. Specify: Standard colors: White **(001)**, Bone **(004)**, Biscuit **(007)**	$ 490
101956-000-001-100	Acrylic apron with access panel. Specify: Standard colors: White **(001)**, Bone **(004)**, Biscuit **(007)**	$ 581
OPT20205	Lite option 3/8 in. thin deck [6] When chosen, this option is offered at no cost	$ 0

ACCESSORIES

SKU	Description	MSRP
10006923	Flexible main hose (9 ft. extension) for air push control air massage - Kit (sold separately)	$ 209
10004306-001	White foam cushion with 2 suction pads (sold separately) Available color: White **(001)**	$ 138
10028641-084	Metal trim kit for Whirlpool and combined systems (sold separately) Available colors: Chrome **(084)** and Brushed Nickel **(105)**	$ 728
10028641-105		$ 728
10034250-084	Metal trim kit for Aeroeffect with Air Push Control (sold separately) Available colors: Chrome **(084)** and Brushed Nickel **(105)**	$ 82
10034250-105		$ 82
10022491-004	Cable-operated waste and overflow (16 in. to 22 in.) (sold separately) Available colors: White **(001)**, Bone **(004)**, Chrome **(084)** and Brushed Nickel **(105)**	$ 362

FOOTNOTES

No	Description
6	Specify 3/8 (Lite option) or 2 in. on deck height. If ordering unit with an apron, only 2 in. deck height is available.
8	Two 6 in. or 12 in. metal or acrylic grab bars are optional. Factory installed, only one positioning is possible (see technical drawings on https://www.maax.com).
10	Systems not available with units installed undermount.
54	A selection of units come with an access panel by default when equipped with a system. However, if the unit is only equipped with chromatherapy, the access panel will not be provided by default.

RECOMMENDED DOORS - VISIT OUR WEBSITE FOR A COMPLETE LIST OF RECOMMENDED DOORS

SKU	Product Name	Pag.
139398	Halo 56 ½-59 x 59 - 8mm	990
139351	Incognito 57 56-59 x 56 3/4 in. 6mm Tub Door	1007
139354	Incognito 57 56-59 x 56 3/4 in. 8mm Tub Door	1011
135330	Incognito 57 Shaker 56-59 x 56 3/4 in. 8mm Tub Door	1005
135695	Revelation Square 56-59 x 56 ¾-59 ¼ - 8mm	1022
135692	Revelation Square 56-59 x 56 ¾-58 ¼ - 6mm	1020
136692	Revelation Round 56-59 x 56 3/4-59 1/4	1017
136695	Revelation Round 56-59 x 56 ¾-59 ¼ - 8 mm	1018
135320	Uptown 56-59 x 58 in. 8 mm	1024
136270	Duel 56-59 x 55 1/2-59	1003
138760	Inverto 56-59 x 55 ½-59 - 8mm	1013
138485	Vela 56 ½-59 x 59 - 8mm	988
138480		986
134661	Kameleon SC 55-59 x 57 - 6mm	995
134573	Kameleon 55-59 x 57 - 8mm	997
134670	Kameleon SC 55-59 x 57 - 8mm	991
134561	Kameleon 55-59 x 57 - 6mm	999
105410	Polar 54-59 1/2 x 57 1/2 in.	1017
105409	Mika 54 - 59 ½ x 55 in.	1015

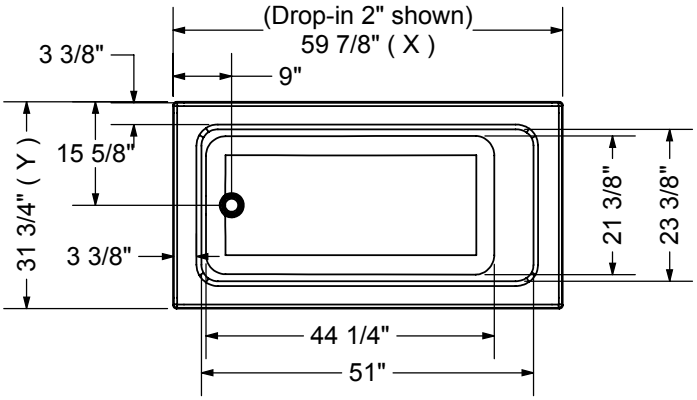

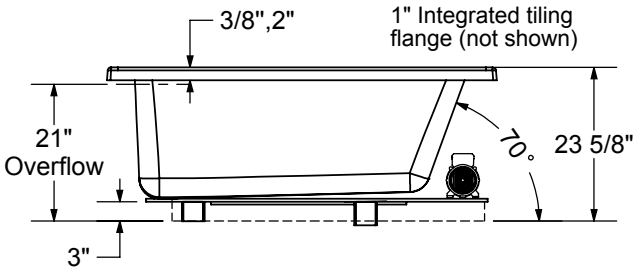

WHIRLPOOL SYSTEM

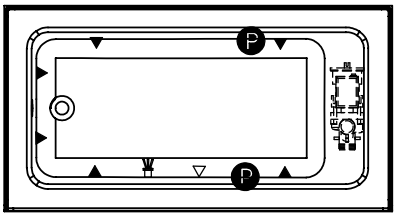

AIR SYSTEM

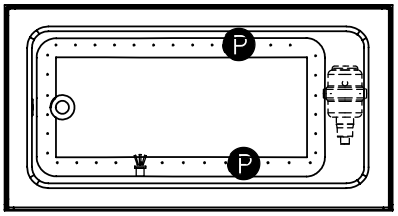

P : Indicates optional grab bar positioning
(▲) : Indicates whirlpool jets positioning
(△) : Indicates suction positioning
(●) : Indicates airjets positioning
( ) : Indicates chromatherapy light positioning

	DROP IN 2"	DROP IN 3/8"	ALCOVE / CORNER
X	59 7/8"	59 3/4"	59 5/8"
Y	31 3/4"	31 5/8"	31 5/8"

APRON (alcove version only)

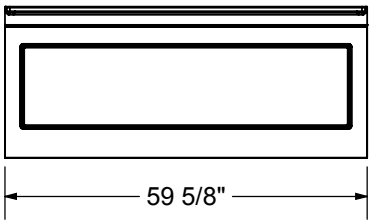

Technical drawing is universal for all 6032 configurations.
External dimension (X,Y) vary depending on configuration (see chart)

Wood support design may vary.
Integrated tiling flange: 1" height X 1/4" thickness (not shown)
Tiling flange position is determined by chosen configuration.

All dimensions are approximate.
Structure measurement must be verified against the unit to ensure proper fit.

Pose 6632 - Corner left

Material : Acrylic

Features

- Rectangular shape bathtub with choices of two deck heights (3/8 or 2 in.) Please specify when ordering.
- Integrated flange (IF) for corner installation
- Textured floor
- Ample deck space for faucet installation
- Right or left drain available

POSE 6632 IF - 106205

SKU	System	Color	Configuration	Dimensions & Weight	Packaging	MSRP
106205-000-001-105	Soaker - No System	White	Left Drain	65 3/4” x 31 5/8” x 23 1/2” / 67 lb	37 ft³	$ 1620
106205-000-001-106			Right Drain			$ 1620
106205-L-001-001	Whirlpool [1 4]		Left Drain			$ 3407
106205-L-096-001	Combined Whirlpool & Aeroeffect [1 3]					$ 5932
106205-L-103-001	Aeroeffect [1 2 5]					$ 4633
106205-R-001-001	Whirlpool [1 4]		Right Drain			$ 3407
106205-R-096-001	Combined Whirlpool & Aeroeffect [1 3]					$ 5932
106205-R-103-001	Aeroeffect [1 2 5]					$ 4633

POSE 6632 IF - 106206

SKU	System	Color	Configuration	Dimensions & Weight	Packaging	MSRP
106206-000-001-107	Soaker - No System	White	Left Drain	65 3/4” x 31 5/8” x 23 1/2” / 67 lb	37 ft³	$ 1620
106206-000-001-108			Right Drain			$ 1620
106206-L-001-001	Whirlpool [1 4]		Left Drain			$ 3407
106206-L-096-001	Combined Whirlpool & Aeroeffect [1 3]					$ 5932
106206-L-103-001	Aeroeffect [1 2 5]					$ 4633
106206-R-001-001	Whirlpool [1 4]		Right Drain			$ 3407
106206-R-096-001	Combined Whirlpool & Aeroeffect [1 3]					$ 5932
106206-R-103-001	Aeroeffect [1 2 5]					$ 4633

COMMON OPTIONS

SKU	Description	MSRP
OPT20205	Lite option 3/8 in. thin deck [6] When chosen, this option is offered at no cost	$ 0
OPT10053	One chromatherapy light (factory installed) [54]	$ 790
OPT10095	Water heater assembly for whirlpool and combined systems (factory installed)	$ 1033
OPT10106-084	Metal trim kit for whirlpool and combined systems (factory installed) Available colors: Chrome **(084)** and Brushed Nickel **(105)**	$ 728
OPT10106-105		$ 728
OPT10260-084	Two 6-in. acrylic grab bars (factory installed) [8] Available colors: White **(001)**, Bone **(004)**, Biscuit **(007)**, Chrome **(084)** and Brushed Nickel **(105)**	$ 392
OPT10260-007		$ 392
OPT10260-004		$ 392
OPT10260-105		$ 392
OPT10260-001		$ 392
OPT20029-105	Metal trim kit for air push control (factory installed) Available colors: Chrome **(084)** and Brushed Nickel **(105)**	$ 82

COMMON OPTIONS

SKU	Description	MSRP
OPT20029-084	Metal trim kit for air push control (factory installed) Available colors: Chrome **(084)** and Brushed Nickel **(105)**	$ 82
OPT20137-004	Cable-operated waste and overflow (16 in. to 22 in.) (included in product packaging when purchased) Available colors: White **(001)**, Bone **(004)**, Chrome **(084)** and Brushed Nickel **(105)**	$ 362
OPT20137-084		$ 362
OPT20137-105		$ 362
OPT20137-001		$ 362

ACCESSORIES

SKU	Description	MSRP
10006923	Flexible main hose (9 ft. extension) for air push control air massage - Kit (sold separately)	$ 209
10004306-001	White foam cushion with 2 suction pads (sold separately) Available color: White **(001)**	$ 138
10028641-084	Metal trim kit for Whirlpool and combined systems (sold separately) Available colors: Chrome **(084)** and Brushed Nickel **(105)**	$ 728
10028641-105		$ 728
10034250-084	Metal trim kit for Aeroeffect with Air Push Control (sold separately) Available colors: Chrome **(084)** and Brushed Nickel **(105)**	$ 82
10034250-105		$ 82
10022491-004	Cable-operated waste and overflow (16 in. to 22 in.) (sold separately) Available colors: White **(001)**, Bone **(004)**, Chrome **(084)** and Brushed Nickel **(105)**	$ 362

FOOTNOTES

No	Description
1	Components for standard colour units equipped with systems are colour-coordinated. Trim kit and/or air push with metallic finish can be added (additional charge applies). For non-standard colour units, please specify trim kit and/or air push colour (additional charge applies for metallic finishes). Please note that the positioning of the system's control could be in conflict with the door if one was installed on the unit. To insure compatibility, please contact customer service.
2	Please order flexible main hose 10006923 for installation of the blower further than 3 ft from the bathtub. For the Tandem models and the Serenade models (freestanding and drop-in), the blower is always remote and not factory installed so a 9 ft flexible main hose is included. Please note that the positioning of the system's control could be in conflict with the door if one was installed on the unit. To insure compatibility, please contact customer service.
3	The blower is not factory installed (remote). 9 ft flexible main hose included. Please note that the positioning of the system's control could be in conflict with the door if one was installed on the unit. To insure compatibility, please contact customer service.
4	For details on pump position and requirements, see technical drawings on https://www.maax.com. When there is a pump position A or B indicated on the technical drawing, please specify position when ordering.
5	For details on blower position and requirements, see technical drawings on https://www.maax.com. When there is a blower position A or B indicated on the technical drawing, please specify position when ordering.
6	Specify 3/8 (Lite option) or 2 in. on deck height. If ordering unit with an apron, only 2 in. deck height is available.
8	Two 6 in. or 12 in. metal or acrylic grab bars are optional. Factory installed, only one positioning is possible (see technical drawings on https://www.maax.com).
54	A selection of units come with an access panel by default when equipped with a system. However, if the unit is only equipped with chromatherapy, the access panel will not be provided by default.

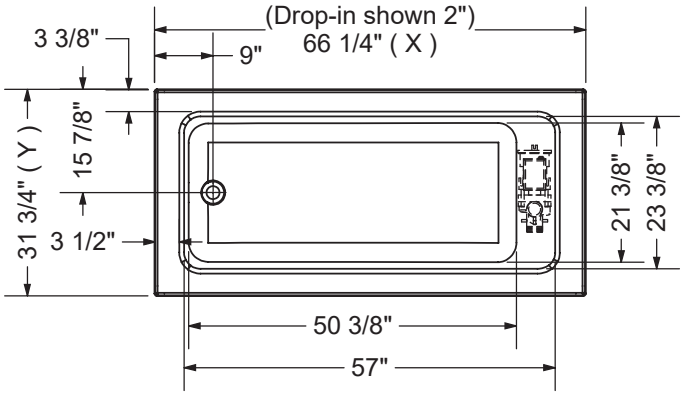

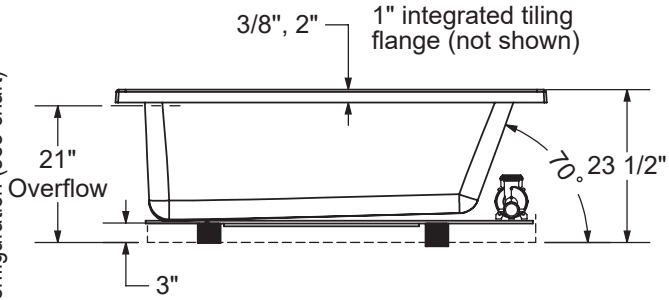

WHIRLPOOL SYSTEM

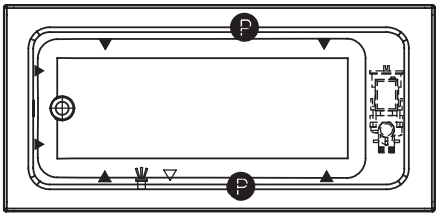

AIR SYSTEM

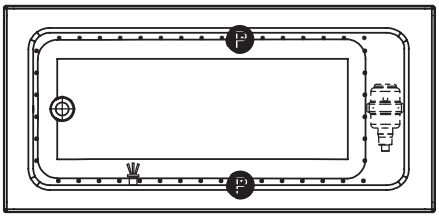

P : Indicates optional grab bar positioning
(▲) : Indicates whirlpool jets positioning
(△) : Indicates suction positioning
(●) : Indicate airjets positioning
( ) : Indicates chromatherapy light positioning

	DROP IN 2"	DROP IN 3/8"	ALCOVE / CORNER
X	66 1/4"	66"	65 3/4"
Y	31 3/4"	31 5/8"	31 5/8"

APRON (alcove version only)

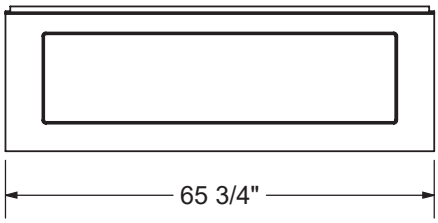

Technical drawing is universal for all 6632 configurations.
External dimension (X,Y) vary depending on configuration (see chart)

Wood support design may vary.
Integrated tiling flange: 1" height X 1/4" thickness (not shown)
Tiling flange position is determined by chosen configuration.

All dimensions are approximate.
Structure measurement must be verified against the unit to ensure proper fit.

Pose 6632 IF

Material : Acrylic

Features

- Rectangular shape bathtub with choices of two deck heights (3/8 or 2 in.) Please specify when ordering
- Drop-in or undermount [10] installation; model also available with integrated flange (IF) for alcove installation
- Textured floor
- Ample deck space for faucet installation

POSE 6632 - 101458

SKU	System	Color	Configuration	Dimensions & Weight	Packaging	MSRP
101458-000-001-100	Soaker - No System	White	End Drain	66 1/4” x 31 3/4” x 23 1/2” / 67 lb	37 ft³	$ 1620
101458-001-001-100	Whirlpool [1 4]					$ 3407
101458-002-001-100	Multi-Pack [9]					$ 7295
101458-096-001-100	Combined Whirlpool & Aeroeffect [1 3]					$ 5932
101458-103-001-100	Aeroeffect [1 2 5]					$ 4633

POSE 6632 IF - 106204

SKU	System	Color	Configuration	Dimensions & Weight	Packaging	MSRP
106204-000-001-103	Soaker - No System	White	Left Drain	65 3/4” x 31 3/4” x 23 1/2” / 67 lb	37 ft³	$ 1620
106204-000-001-104			Right Drain			$ 1620
106204-002-001-101	Multi-Pack [9]		Left Drain			$ 7295
106204-002-001-102			Right Drain			$ 7295
106204-L-001-001	Whirlpool [1 4]		Left Drain			$ 3407
106204-L-096-001	Combined Whirlpool & Aeroeffect [1 3]					$ 5932
106204-L-103-001	Aeroeffect [1 2 5]					$ 4633
106204-R-001-001	Whirlpool [1 4]		Right Drain			$ 3407
106204-R-096-001	Combined Whirlpool & Aeroeffect [1 3]					$ 5932
106204-R-103-001	Aeroeffect [1 2 5]					$ 4633

COMMON OPTIONS

SKU	Description	MSRP
OPT10095	Water heater assembly for whirlpool and combined systems (factory installed)	$ 1033
OPT10106-084	Metal trim kit for whirlpool and combined systems (factory installed) Available colors: Chrome **(084)** and Brushed Nickel **(105)**	$ 728
OPT10106-105		$ 728
OPT10260-084	Two 6-in. acrylic grab bars (factory installed) [8] Available colors: White **(001)**, Bone **(004)**, Biscuit **(007)**, Chrome **(084)** and Brushed Nickel **(105)**	$ 392
OPT10260-007		$ 392
OPT10260-004		$ 392
OPT10260-105		$ 392
OPT10260-001		$ 392
OPT20029-105	Metal trim kit for air push control (factory installed) Available colors: Chrome **(084)** and Brushed Nickel **(105)**	$ 82
OPT20029-084		$ 82
OPT20137-004	Cable-operated waste and overflow (16 in. to 22 in.) (included in product packaging when purchased) Available colors: White **(001)**, Bone **(004)**, Chrome **(084)** and Brushed Nickel **(105)**	$ 362
OPT20137-084		$ 362
OPT20137-105		$ 362
OPT20137-001		$ 362

COMMON OPTIONS

SKU	Description	MSRP
OPT10053	One chromatherapy light (factory installed) [54]	$ 790
101954-000-001-100	Acrylic apron without access panel. Specify: Standard colors: White **(001)**, Bone **(004)**, Biscuit **(007)**	$ 605
101957-000-001-100	Acrylic apron with access panel. Specify: Standard colors: White **(001)**, Bone **(004)**, Biscuit **(007)**	$ 720
OPT20205	Lite option 3/8 in. thin deck [6] When chosen, this option is offered at no cost	$ 0

ACCESSORIES

SKU	Description	MSRP
10006923	Flexible main hose (9 ft. extension) for air push control air massage - Kit (sold separately)	$ 209
10004306-001	White foam cushion with 2 suction pads (sold separately) Available color: White **(001)**	$ 138
10028641-084	Metal trim kit for Whirlpool and combined systems (sold separately) Available colors: Chrome **(084)** and Brushed Nickel **(105)**	$ 728
10028641-105		$ 728
10034250-084	Metal trim kit for Aeroeffect with Air Push Control (sold separately) Available colors: Chrome **(084)** and Brushed Nickel **(105)**	$ 82
10034250-105		$ 82
10022491-004	Cable-operated waste and overflow (16 in. to 22 in.) (sold separately) Available colors: White **(001)**, Bone **(004)**, Chrome **(084)** and Brushed Nickel **(105)**	$ 362

FOOTNOTES

No	Description
6	Specify 3/8 (Lite option) or 2 in. on deck height. If ordering unit with an apron, only 2 in. deck height is available.
8	Two 6 in. or 12 in. metal or acrylic grab bars are optional. Factory installed, only one positioning is possible (see technical drawings on https://www.maax.com).
10	Systems not available with units installed undermount.
54	A selection of units come with an access panel by default when equipped with a system. However, if the unit is only equipped with chromatherapy, the access panel will not be provided by default.

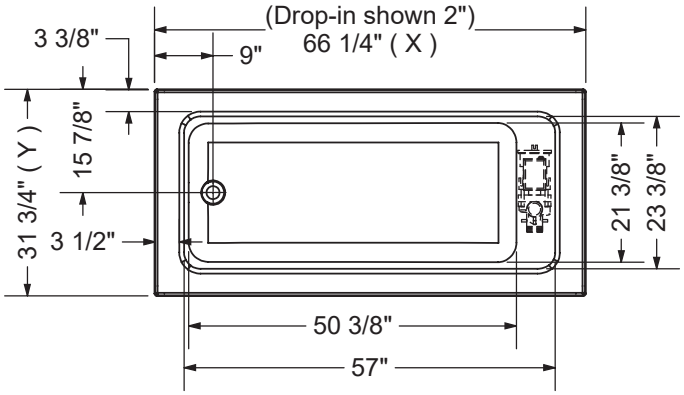

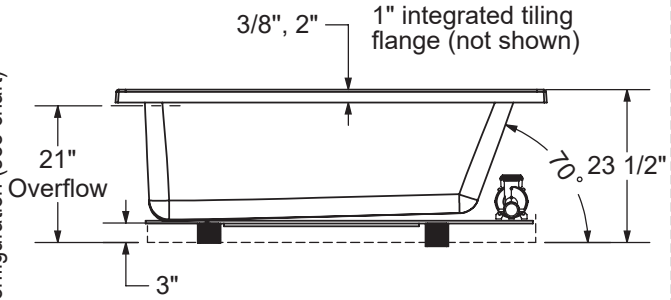

WHIRLPOOL SYSTEM

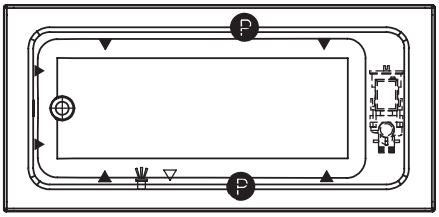

AIR SYSTEM

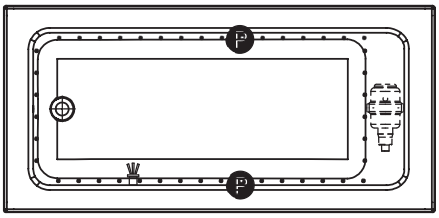

- (P) : Indicates optional grab bar positioning
- (▲) : Indicates whirlpool jets positioning
- (△) : Indicates suction positioning
- (●) : Indicate airjets positioning
- ( ) : Indicates chromatherapy light positioning

	DROP IN 2"	DROP IN 3/8"	ALCOVE / CORNER
X	66 1/4"	66"	65 3/4"
Y	31 3/4"	31 5/8"	31 5/8"

APRON (alcove version only)

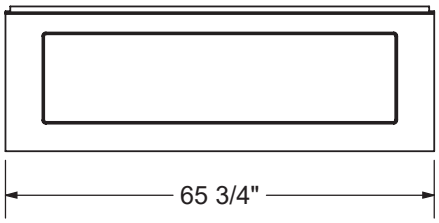

Technical drawing is universal for all 6632 configurations.
External dimension (X,Y) vary depending on configuration (see chart)

Wood support design may vary.
Integrated tiling flange: 1" height X 1/4" thickness (not shown)
Tiling flange position is determined by chosen configuration.

All dimensions are approximate.
Structure measurement must be verified against the unit to ensure proper fit.

Pose 6636 - Corner left

Material : Acrylic

Features

- Rectangular shape bathtub with choices of two deck heights (3/8 or 2 in.) Please specify when ordering.
- Integrated flange (IF) for corner installation
- Textured floor
- Ample deck space for faucet installation
- Right or left drain available

POSE 6636 IF - 106208

SKU	System	Color	Configuration	Dimensions & Weight	Packaging	MSRP
106208-000-001-111	Soaker - No System	White	Left Drain	65 3/4” x 35 5/8” x 23 5/8” / 75 lb	39 ft³	$ 1743
106208-000-001-112			Right Drain			$ 1743
106208-L-001-001	Whirlpool [1 4]		Left Drain			$ 3530
106208-L-096-001	Combined Whirlpool & Aeroeffect [1 3]					$ 6055
106208-L-103-001	Aeroeffect [1 2 5]					$ 4756
106208-R-001-001	Whirlpool [1 4]		Right Drain			$ 3530
106208-R-096-001	Combined Whirlpool & Aeroeffect [1 3]					$ 6055
106208-R-103-001	Aeroeffect [1 2 5]					$ 4756

POSE 6636 IF - 106209

SKU	System	Color	Configuration	Dimensions & Weight	Packaging	MSRP
106209-000-001-113	Soaker - No System	White	Left Drain	65 3/4” x 35 5/8” x 23 5/8” / 75 lb	39 ft³	$ 1743
106209-000-001-114			Right Drain			$ 1743
106209-L-001-001	Whirlpool [1 4]		Left Drain			$ 3530
106209-L-096-001	Combined Whirlpool & Aeroeffect [1 3]					$ 6055
106209-L-103-001	Aeroeffect [1 2 5]					$ 4756
106209-R-001-001	Whirlpool [1 4]		Right Drain			$ 3530
106209-R-096-001	Combined Whirlpool & Aeroeffect [1 3]					$ 6055
106209-R-103-001	Aeroeffect [1 2 5]					$ 4756

COMMON OPTIONS

SKU	Description	MSRP
OPT10106-084	Metal trim kit for whirlpool and combined systems (factory installed) Available colors: Chrome **(084)** and Brushed Nickel **(105)**	$ 728
OPT10106-105		$ 728
OPT10260-084	Two 6-in. acrylic grab bars (factory installed) [8] Available colors: White **(001)**, Bone **(004)**, Biscuit **(007)**, Chrome **(084)** and Brushed Nickel **(105)**	$ 392
OPT10260-007		$ 392
OPT10260-004		$ 392
OPT10260-105		$ 392
OPT10260-001		$ 392
OPT20029-105	Metal trim kit for air push control (factory installed) Available colors: Chrome **(084)** and Brushed Nickel **(105)**	$ 82
OPT20029-084		$ 82
OPT20137-004	Cable-operated waste and overflow (16 in. to 22 in.) (included in product packaging when purchased) Available colors: White **(001)**, Bone **(004)**, Chrome **(084)** and Brushed Nickel **(105)**	$ 362
OPT20137-084		$ 362
OPT20137-105		$ 362
OPT20137-001		$ 362

COMMON OPTIONS

SKU	Description	MSRP
OPT20205	Lite option 3/8 in. thin deck [6] When chosen, this option is offered at no cost	$ 0
OPT10053	One chromatherapy light (factory installed) [54]	$ 790
OPT10095	Water heater assembly for whirlpool and combined systems (factory installed)	$ 1033

ACCESSORIES

SKU	Description	MSRP
10006923	Flexible main hose (9 ft. extension) for air push control air massage - Kit (sold separately)	$ 209
10004306-001	White foam cushion with 2 suction pads (sold separately) Available color: White **(001)**	$ 138
10028641-084	Metal trim kit for Whirlpool and combined systems (sold separately) Available colors: Chrome **(084)** and Brushed Nickel **(105)**	$ 728
10028641-105		$ 728
10034250-084	Metal trim kit for Aeroeffect with Air Push Control (sold separately) Available colors: Chrome **(084)** and Brushed Nickel **(105)**	$ 82
10034250-105		$ 82
10022491-004	Cable-operated waste and overflow (16 in. to 22 in.) (sold separately) Available colors: White **(001)**, Bone **(004)**, Chrome **(084)** and Brushed Nickel **(105)**	$ 362

FOOTNOTES

No	Description
6	Specify 3/8 (Lite option) or 2 in. on deck height. If ordering unit with an apron, only 2 in. deck height is available.
8	Two 6 in. or 12 in. metal or acrylic grab bars are optional. Factory installed, only one positioning is possible (see technical drawings on https://www.maax.com).
54	A selection of units come with an access panel by default when equipped with a system. However, if the unit is only equipped with chromatherapy, the access panel will not be provided by default.

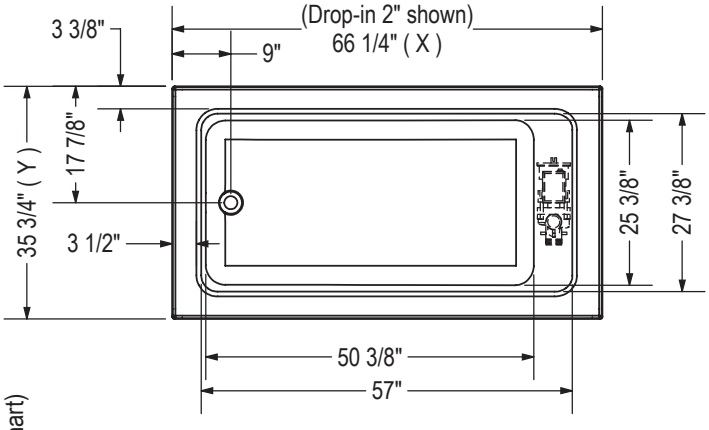

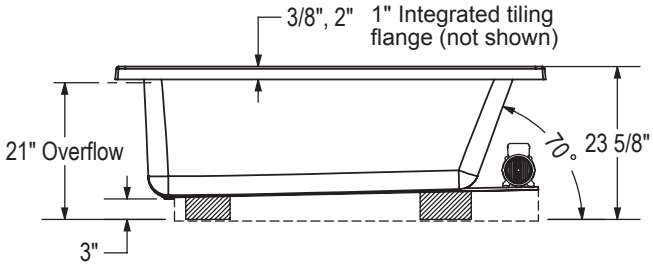

Technical drawing is universal for all 6636 configurations.
External dimension (X,Y) vary depending on configuration (see chart)

WHIRLPOOL SYSTEM

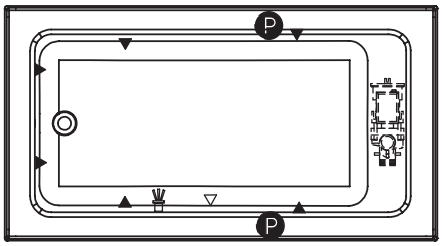

AIR SYSTEM

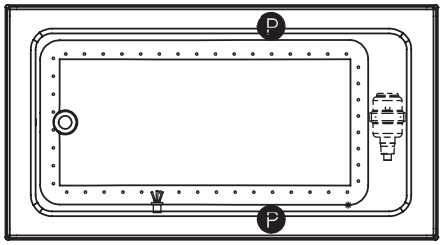

P : Indicates optional grab bar positioning
(▲) : Indicates whirlpool jets positioning
(△) : Indicates suction positioning
(●) : Indicates airjets positioning
( ) : Indicates chromatherapy light positioning

	DROP IN 2"	DROP IN 3/8"	ALCOVE / CORNER
X	66 1/4"	66"	65 3/4"
Y	35 3/4"	35 5/8"	35 5/8"

APRON (alcove version only)

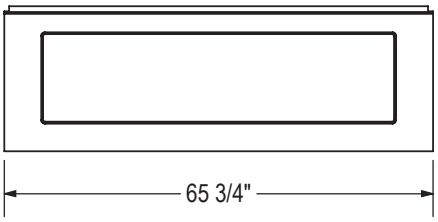

Wood support design may vary.
Integrated tiling flange: 1" height X 1/4" thickness (not shown)
Tiling flange position is determined by chosen configuration.

All dimensions are approximate.
Structure measurement must be verified against the unit to ensure proper fit.

Pose 6636 IF

Material : Acrylic

Features

- Rectangular shape bathtub with choices of two deck heights (3/8 or 2 in.) Please specify when ordering
- Drop-in or undermount [10] installation; model also available with integrated flange (IF) for alcove installation
- Textured floor
- Ample deck space for faucet installation
- Skirt with or without access panel available

POSE 6636 - 101459

SKU	System	Color	Configuration	Dimensions & Weight	Packaging	MSRP
101459-000-001-100	Soaker - No System	White	End Drain	66 1/4” x 35 3/4” x 23 5/8” / 75 lb	39 ft³	$ 1743
101459-001-001-100	Whirlpool [1 4]					$ 3530
101459-002-001-100	Multi-Pack [9]					$ 7860
101459-096-001-100	Combined Whirlpool & Aeroeffect [1 3]					$ 6055
101459-103-001-100	Aeroeffect [1 2 5]					$ 4756

POSE 6636 IF - 106207

SKU	System	Color	Configuration	Dimensions & Weight	Packaging	MSRP
106207-000-001-109	Soaker - No System	White	Left Drain	65 3/4” x 35 5/8” x 23 5/8” / 75 lb	39 ft³	$ 1743
106207-000-001-110			Right Drain			$ 1743
106207-002-001-101	Multi-Pack [9]		Left Drain			$ 7860
106207-002-001-102			Right Drain			$ 7860
106207-L-001-001	Whirlpool [1 4]		Left Drain			$ 3530
106207-L-096-001	Combined Whirlpool & Aeroeffect [1 3]					$ 6055
106207-L-103-001	Aeroeffect [1 2 5]					$ 4756
106207-R-001-001	Whirlpool [1 4]		Right Drain			$ 3530
106207-R-096-001	Combined Whirlpool & Aeroeffect [1 3]					$ 6055
106207-R-103-001	Aeroeffect [1 2 5]					$ 4756

COMMON OPTIONS

SKU	Description	MSRP
OPT10095	Water heater assembly for whirlpool and combined systems (factory installed)	$ 1033
OPT10106-084	Metal trim kit for whirlpool and combined systems (factory installed) Available colors: Chrome **(084)** and Brushed Nickel **(105)**	$ 728
OPT10106-105		$ 728
OPT10260-084	Two 6-in. acrylic grab bars (factory installed) [8] Available colors: White **(001)**, Bone **(004)**, Biscuit **(007)**, Chrome **(084)** and Brushed Nickel **(105)**	$ 392
OPT10260-007		$ 392
OPT10260-004		$ 392
OPT10260-105		$ 392
OPT10260-001		$ 392
OPT20029-105	Metal trim kit for air push control (factory installed) Available colors: Chrome **(084)** and Brushed Nickel **(105)**	$ 82
OPT20029-084		$ 82
OPT20137-004	Cable-operated waste and overflow (16 in. to 22 in.) (included in product packaging when purchased) Available colors: White **(001)**, Bone **(004)**, Chrome **(084)** and Brushed Nickel **(105)**	$ 362
OPT20137-084		$ 362
OPT20137-105		$ 362
OPT20137-001		$ 362

COMMON OPTIONS

SKU	Description	MSRP
OPT10053	One chromatherapy light (factory installed) [54]	$ 790
101954-000-001-100	Acrylic apron without access panel. Specify: Standard colors: White **(001)**, Bone **(004)**, Biscuit **(007)**	$ 605
101957-000-001-100	Acrylic apron with access panel. Specify: Standard colors: White **(001)**, Bone **(004)**, Biscuit **(007)**	$ 720
OPT20205	Lite option 3/8 in. thin deck [6] When chosen, this option is offered at no cost	$ 0

ACCESSORIES

SKU	Description	MSRP
10006923	Flexible main hose (9 ft. extension) for air push control air massage - Kit (sold separately)	$ 209
10004306-001	White foam cushion with 2 suction pads (sold separately) Available color: White **(001)**	$ 138
10028641-084	Metal trim kit for Whirlpool and combined systems (sold separately) Available colors: Chrome **(084)** and Brushed Nickel **(105)**	$ 728
10028641-105		$ 728
10034250-084	Metal trim kit for Aeroeffect with Air Push Control (sold separately) Available colors: Chrome **(084)** and Brushed Nickel **(105)**	$ 82
10034250-105		$ 82
10022491-004	Cable-operated waste and overflow (16 in. to 22 in.) (sold separately) Available colors: White **(001)**, Bone **(004)**, Chrome **(084)** and Brushed Nickel **(105)**	$ 362

FOOTNOTES

No	Description
6	Specify 3/8 (Lite option) or 2 in. on deck height. If ordering unit with an apron, only 2 in. deck height is available.
8	Two 6 in. or 12 in. metal or acrylic grab bars are optional. Factory installed, only one positioning is possible (see technical drawings on https://www.maax.com).
10	Systems not available with units installed undermount.
54	A selection of units come with an access panel by default when equipped with a system. However, if the unit is only equipped with chromatherapy, the access panel will not be provided by default.

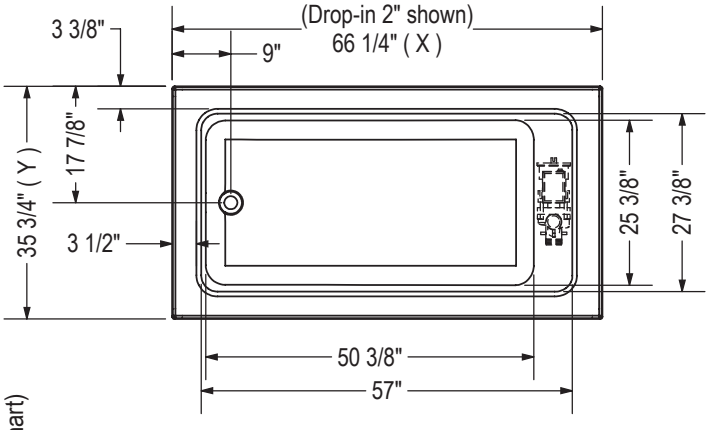

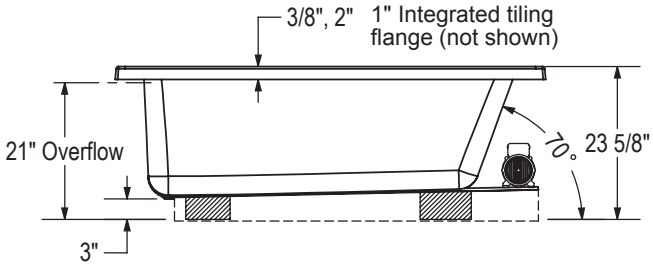

Technical drawing is universal for all 6636 configurations.
External dimension (X,Y) vary depending on configuration (see chart)

WHIRLPOOL SYSTEM

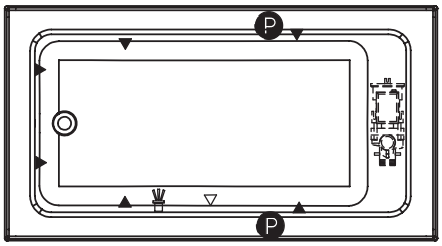

AIR SYSTEM

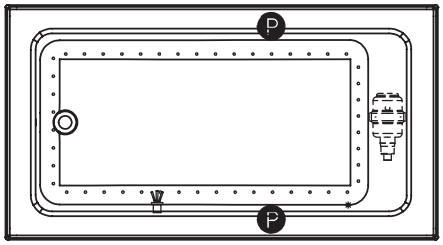

P : Indicates optional grab bar positioning
(▲) : Indicates whirlpool jets positioning
(△) : Indicates suction positioning
(●) : Indicates airjets positioning
( ) : Indicates chromatherapy light positioning

	DROP IN 2"	DROP IN 3/8"	ALCOVE / CORNER
X	66 1/4"	66"	65 3/4"
Y	35 3/4"	35 5/8"	35 5/8"

APRON (alcove version only)

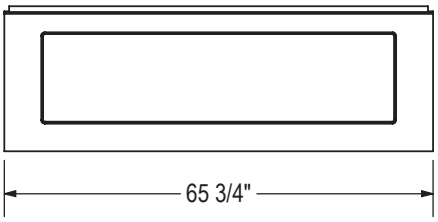

Wood support design may vary.
Integrated tiling flange: 1" height X 1/4" thickness (not shown)
Tiling flange position is determined by chosen configuration.

All dimensions are approximate.
Structure measurement must be verified against the unit to ensure proper fit.

Pose 7236 - Corner left

Material : Acrylic

Features

- Rectangular shape bathtub with choices of two deck heights (3/8 or 2 in.) Please specify when ordering.
- Integrated flange (IF) for corner installation
- Textured floor
- Ample deck space for faucet installation
- Right or left drain available

POSE 7236 IF - 106211

SKU	System	Color	Configuration	Dimensions & Weight	Packaging	MSRP
106211-000-001-105	Soaker - No System	White	Left Drain	71 1/2” x 35 3/8” x 23 5/8” / 82 lb	42 ft³	$ 1874
106211-000-001-106			Right Drain			$ 1874
106211-L-001-001	Whirlpool [1 4]		Left Drain			$ 3661
106211-L-096-001	Combined Whirlpool & Aeroeffect [1 3]					$ 6186
106211-L-103-001	Aeroeffect [1 2 5]					$ 4887
106211-R-001-001	Whirlpool [1 4]		Right Drain			$ 3661
106211-R-096-001	Combined Whirlpool & Aeroeffect [1 3]					$ 6186
106211-R-103-001	Aeroeffect [1 2 5]					$ 4887

POSE 7236 IF - 106212

SKU	System	Color	Configuration	Dimensions & Weight	Packaging	MSRP
106212-000-001-107	Soaker - No System	White	Left Drain	71 1/2” x 35 3/8” x 23 5/8” / 82 lb	42 ft³	$ 1874
106212-000-001-108			Right Drain			$ 1874
106212-L-001-001	Whirlpool [1 4]		Left Drain			$ 3661
106212-L-096-001	Combined Whirlpool & Aeroeffect [1 3]					$ 6186
106212-L-103-001	Aeroeffect [1 2 5]					$ 4887
106212-R-001-001	Whirlpool [1 4]		Right Drain			$ 3661
106212-R-096-001	Combined Whirlpool & Aeroeffect [1 3]					$ 6186
106212-R-103-001	Aeroeffect [1 2 5]					$ 4887

COMMON OPTIONS

SKU	Description	MSRP
OPT10106-084	Metal trim kit for whirlpool and combined systems (factory installed) Available colors: Chrome **(084)** and Brushed Nickel **(105)**	$ 728
OPT10106-105		$ 728
OPT10260-084	Two 6-in. acrylic grab bars (factory installed) [8] Available colors: White **(001)**, Bone **(004)**, Biscuit **(007)**, Chrome **(084)** and Brushed Nickel **(105)**	$ 392
OPT10260-007		$ 392
OPT10260-004		$ 392
OPT10260-105		$ 392
OPT10260-001		$ 392
OPT20029-105	Metal trim kit for air push control (factory installed) Available colors: Chrome **(084)** and Brushed Nickel **(105)**	$ 82
OPT20029-084		$ 82
OPT20137-004	Cable-operated waste and overflow (16 in. to 22 in.) (included in product packaging when purchased) Available colors: White **(001)**, Bone **(004)**, Chrome **(084)** and Brushed Nickel **(105)**	$ 362
OPT20137-084		$ 362
OPT20137-105		$ 362
OPT20137-001		$ 362

COMMON OPTIONS

SKU	Description	MSRP
OPT20205	Lite option 3/8 in. thin deck [6] When chosen, this option is offered at no cost	$ 0
OPT10053	One chromatherapy light (factory installed) [54]	$ 790
OPT10095	Water heater assembly for whirlpool and combined systems (factory installed)	$ 1033

ACCESSORIES

SKU	Description	MSRP
10006923	Flexible main hose (9 ft. extension) for air push control air massage - Kit (sold separately)	$ 209
10004306-001	White foam cushion with 2 suction pads (sold separately) Available color: White **(001)**	$ 138
10028641-084	Metal trim kit for Whirlpool and combined systems (sold separately) Available colors: Chrome **(084)** and Brushed Nickel **(105)**	$ 728
10028641-105		$ 728
10034250-084	Metal trim kit for Aeroeffect with Air Push Control (sold separately) Available colors: Chrome **(084)** and Brushed Nickel **(105)**	$ 82
10034250-105		$ 82
10022491-004	Cable-operated waste and overflow (16 in. to 22 in.) (sold separately) Available colors: White **(001)**, Bone **(004)**, Chrome **(084)** and Brushed Nickel **(105)**	$ 362

FOOTNOTES

No	Description
6	Specify 3/8 (Lite option) or 2 in. on deck height. If ordering unit with an apron, only 2 in. deck height is available.
8	Two 6 in. or 12 in. metal or acrylic grab bars are optional. Factory installed, only one positioning is possible (see technical drawings on https://www.maax.com).
54	A selection of units come with an access panel by default when equipped with a system. However, if the unit is only equipped with chromatherapy, the access panel will not be provided by default.

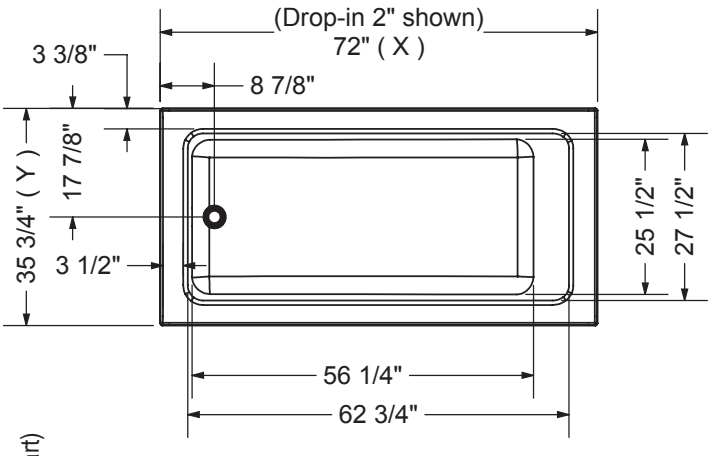

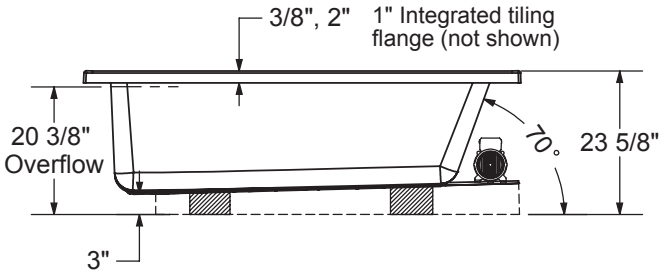

Technical drawing is universal for all 7236 configurations.
External dimension (X,Y) vary depending on configuration (see chart)

	DROP IN 2"	DROP IN 3/8"	ALCOVE / CORNER
X	72"	71 7/8"	71 1/2"
Y	35 3/4"	35 5/8"	35 3/8"

WHIRLPOOL SYSTEM

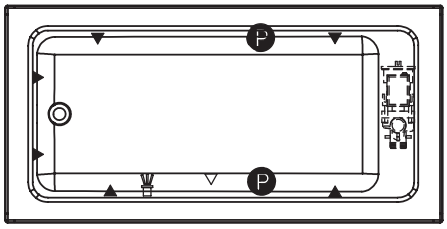

AIR SYSTEM

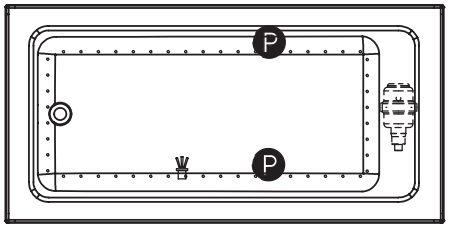

P : Indicates optional grab bar positioning
(▲) : Indicates whirlpool jets positioning
(△) : Indicates suction positioning
(●) : Indicates airjets positioning
( ) : Indicates chromatherapy light positioning

APRON (alcove version only)

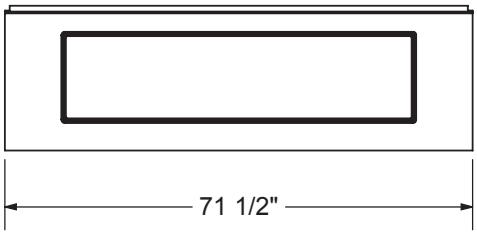

Wood support design may vary.
Integrated tiling flange: 1" height X 1/4" thickness (not shown)
Tiling flange position is determined by chosen configuration.
All dimensions are approximate.
Structure measurement must be verified against the unit to ensure proper fit.

Pose 7236 IF

Material : Acrylic

Features

- Rectangular shape bathtub with choices of two deck heights (3/8 or 2 in.) Please specify when ordering
- Drop-in or undermount [10] installation; model also available with integrated flange (IF) for alcove installation
- Textured floor
- Ample deck space for faucet installation
- Skirt with or without access panel available

POSE 7236 - 101460

SKU	System	Color	Configuration	Dimensions & Weight	Packaging	MSRP
101460-000-001-100	Soaker - No System	White	End Drain	72” x 35 3/4” x 23 5/8” / 82 lb	42 ft^3	$ 1874
101460-001-001-100	Whirlpool [1 4]					$ 3661
101460-002-001-100	Multi-Pack [9]					$ 8430
101460-096-001-100	Combined Whirlpool & Aeroeffect [1 3]					$ 6186
101460-103-001-100	Aeroeffect [1 2 5]					$ 4887

POSE 7236 IF - 106210

SKU	System	Color	Configuration	Dimensions & Weight	Packaging	MSRP
106210-000-001-103	Soaker - No System	White	Left Drain	71 1/2” x 35 3/4” x 23 5/8” / 82 lb	42 ft^3	$ 1874
106210-000-001-104			Right Drain			$ 1874
106210-002-001-101	Multi-Pack [9]		Left Drain			$ 8430
106210-002-001-102			Right Drain			$ 8430
106210-L-001-001	Whirlpool [1 4]		Left Drain			$ 3661
106210-L-096-001	Combined Whirlpool & Aeroeffect [1 3]					$ 6186
106210-L-103-001	Aeroeffect [1 2 5]					$ 4887
106210-R-001-001	Whirlpool [1 4]		Right Drain			$ 3661
106210-R-096-001	Combined Whirlpool & Aeroeffect [1 3]					$ 6186
106210-R-103-001	Aeroeffect [1 2 5]					$ 4887

COMMON OPTIONS

SKU	Description	MSRP
OPT10095	Water heater assembly for whirlpool and combined systems (factory installed)	$ 1033
OPT10106-084	Metal trim kit for whirlpool and combined systems (factory installed) Available colors: Chrome **(084)** and Brushed Nickel **(105)**	$ 728
OPT10106-105		$ 728
OPT10260-084	Two 6-in. acrylic grab bars (factory installed) [8] Available colors: White **(001)**, Bone **(004)**, Biscuit **(007)**, Chrome **(084)** and Brushed Nickel **(105)**	$ 392
OPT10260-007		$ 392
OPT10260-004		$ 392
OPT10260-105		$ 392
OPT10260-001		$ 392
OPT20029-105	Metal trim kit for air push control (factory installed) Available colors: Chrome **(084)** and Brushed Nickel **(105)**	$ 82
OPT20029-084		$ 82
OPT20137-004	Cable-operated waste and overflow (16 in. to 22 in.) (included in product packaging when purchased) Available colors: White **(001)**, Bone **(004)**, Chrome **(084)** and Brushed Nickel **(105)**	$ 362
OPT20137-084		$ 362
OPT20137-105		$ 362
OPT20137-001		$ 362

COMMON OPTIONS

SKU	Description	MSRP
OPT10053	One chromatherapy light (factory installed) [54]	$ 790
101955-000-001-100	Acrylic apron without access panel. Specify: Standard colors: White **(001)**, Bone **(004)**, Biscuit **(007)**	$ 605
101958-000-001-100	Acrylic apron with access panel. Specify: Standard colors: White **(001)**, Bone **(004)**, Biscuit **(007)**	$ 720
OPT20205	Lite option 3/8 in. thin deck [6] When chosen, this option is offered at no cost	$ 0

ACCESSORIES

SKU	Description	MSRP
10006923	Flexible main hose (9 ft. extension) for air push control air massage - Kit (sold separately)	$ 209
10004306-001	White foam cushion with 2 suction pads (sold separately) Available color: White **(001)**	$ 138
10028641-084	Metal trim kit for Whirlpool and combined systems (sold separately) Available colors: Chrome **(084)** and Brushed Nickel **(105)**	$ 728
10028641-105		$ 728
10034250-084	Metal trim kit for Aeroeffect with Air Push Control (sold separately) Available colors: Chrome **(084)** and Brushed Nickel **(105)**	$ 82
10034250-105		$ 82
10022491-004	Cable-operated waste and overflow (16 in. to 22 in.) (sold separately) Available colors: White **(001)**, Bone **(004)**, Chrome **(084)** and Brushed Nickel **(105)**	$ 362

FOOTNOTES

No	Description
6	Specify 3/8 (Lite option) or 2 in. on deck height. If ordering unit with an apron, only 2 in. deck height is available.
8	Two 6 in. or 12 in. metal or acrylic grab bars are optional. Factory installed, only one positioning is possible (see technical drawings on https://www.maax.com).
10	Systems not available with units installed undermount.
54	A selection of units come with an access panel by default when equipped with a system. However, if the unit is only equipped with chromatherapy, the access panel will not be provided by default.

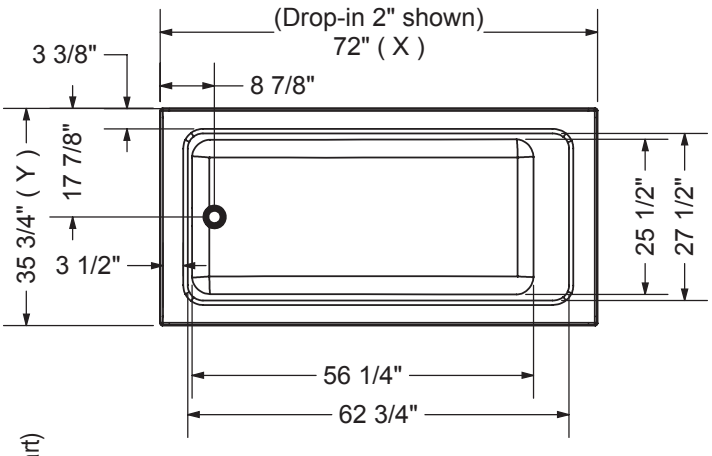

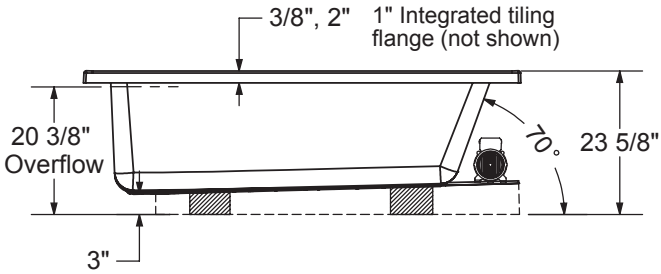

Technical drawing is universal for all 7236 configurations.
External dimension (X,Y) vary depending on configuration (see chart)

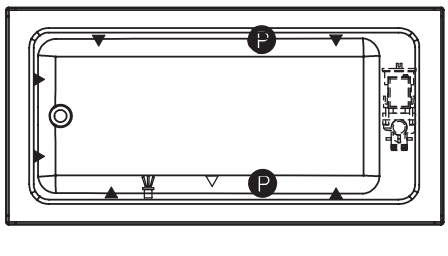

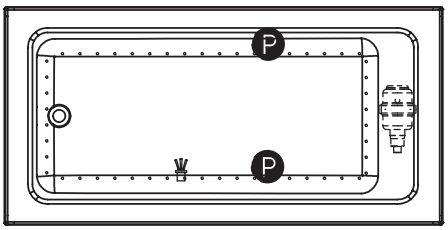

- (P) : Indicates optional grab bar positioning
- (▲) : Indicates whirlpool jets positioning
- (△) : Indicates suction positioning
- (●) : Indicates airjets positioning
- ( ) : Indicates chromatherapy light positioning

	DROP IN 2"	DROP IN 3/8"	ALCOVE / CORNER
X	72"	71 7/8"	71 1/2"
Y	35 3/4"	35 5/8"	35 3/8"

APRON (alcove version only)

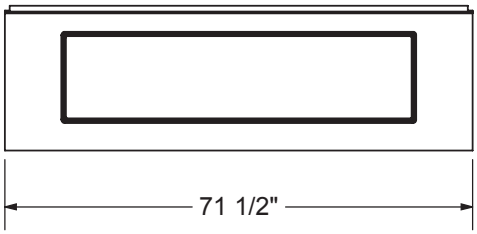

Wood support design may vary.
Integrated tiling flange: 1" height X 1/4" thickness (not shown)
Tiling flange position is determined by chosen configuration.
All dimensions are approximate.
Structure measurement must be verified against the unit to ensure proper fit.

Pose 7242 - Corner left

Material : Acrylic

Features

- Rectangular shape bathtub with choices of two deck heights (3/8 or 2 in.) Please specify when ordering.
- Integrated flange (IF) for corner installation
- Textured floor
- Ample deck space for faucet installation
- Right or left drain available

POSE 7242 IF - 106214

SKU	System	Color	Configuration	Dimensions & Weight	Packaging	MSRP
106214-000-001-107	Soaker - No System	White	Left Drain	71 1/2” x 41 5/8” x 23 5/8” / 95 lb	49 ft³	$ 2041
106214-000-001-108			Right Drain			$ 2041
106214-L-001-001	Whirlpool [1 4]		Left Drain			$ 3828
106214-L-096-001	Combined Whirlpool & Aeroeffect [1 3]					$ 6353
106214-L-103-001	Aeroeffect [1 2 5]					$ 5054
106214-R-001-001	Whirlpool [1 4]		Right Drain			$ 3828
106214-R-096-001	Combined Whirlpool & Aeroeffect [1 3]					$ 6353
106214-R-103-001	Aeroeffect [1 2 5]					$ 5054

POSE 7242 IF - 106215

SKU	System	Color	Configuration	Dimensions & Weight	Packaging	MSRP
106215-000-001-105	Soaker - No System	White	Left Drain	71 1/2” x 41 5/8” x 23 5/8” / 95 lb	49 ft³	$ 2041
106215-000-001-106			Right Drain			$ 2041
106215-L-001-001	Whirlpool [1 4]		Left Drain			$ 3828
106215-L-096-001	Combined Whirlpool & Aeroeffect [1 3]					$ 6353
106215-L-103-001	Aeroeffect [1 2 5]					$ 5054
106215-R-001-001	Whirlpool [1 4]		Right Drain			$ 3828
106215-R-096-001	Combined Whirlpool & Aeroeffect [1 3]					$ 6353
106215-R-103-001	Aeroeffect [1 2 5]					$ 5054

COMMON OPTIONS

SKU	Description	MSRP
OPT20205	Lite option 3/8 in. thin deck [6] When chosen, this option is offered at no cost	$ 0
OPT10053	One chromatherapy light (factory installed) [54]	$ 790
OPT10095	Water heater assembly for whirlpool and combined systems (factory installed)	$ 1033
OPT10106-084	Metal trim kit for whirlpool and combined systems (factory installed) Available colors: Chrome **(084)** and Brushed Nickel **(105)**	$ 728
OPT10106-105		$ 728
OPT10260-084	Two 6-in. acrylic grab bars (factory installed) [8] Available colors: White **(001)**, Bone **(004)**, Biscuit **(007)**, Chrome **(084)** and Brushed Nickel **(105)**	$ 392
OPT10260-007		$ 392
OPT10260-004		$ 392
OPT10260-105		$ 392
OPT10260-001		$ 392
OPT20029-105	Metal trim kit for air push control (factory installed) Available colors: Chrome **(084)** and Brushed Nickel **(105)**	$ 82

COMMON OPTIONS

SKU	Description	MSRP
OPT20029-084	Metal trim kit for air push control (factory installed) Available colors: Chrome **(084)** and Brushed Nickel **(105)**	$ 82
OPT20137-004	Cable-operated waste and overflow (16 in. to 22 in.) (included in product packaging when purchased) Available colors: White **(001)**, Bone **(004)**, Chrome **(084)** and Brushed Nickel **(105)**	$ 362
OPT20137-084		$ 362
OPT20137-105		$ 362
OPT20137-001		$ 362

ACCESSORIES

SKU	Description	MSRP
10006923	Flexible main hose (9 ft. extension) for air push control air massage - Kit (sold separately)	$ 209
10004306-001	White foam cushion with 2 suction pads (sold separately) Available color: White **(001)**	$ 138
10028641-084	Metal trim kit for Whirlpool and combined systems (sold separately) Available colors: Chrome **(084)** and Brushed Nickel **(105)**	$ 728
10028641-105		$ 728
10034250-084	Metal trim kit for Aeroeffect with Air Push Control (sold separately) Available colors: Chrome **(084)** and Brushed Nickel **(105)**	$ 82
10034250-105		$ 82
10022491-004	Cable-operated waste and overflow (16 in. to 22 in.) (sold separately) Available colors: White **(001)**, Bone **(004)**, Chrome **(084)** and Brushed Nickel **(105)**	$ 362

FOOTNOTES

No	Description
1	Components for standard colour units equipped with systems are colour-coordinated. Trim kit and/or air push with metallic finish can be added (additional charge applies). For non-standard colour units, please specify trim kit and/or air push colour (additional charge applies for metallic finishes). Please note that the positioning of the system's control could be in conflict with the door if one was installed on the unit. To insure compatibility, please contact customer service.
2	Please order flexible main hose 10006923 for installation of the blower further than 3 ft from the bathtub. For the Tandem models and the Serenade models (freestanding and drop-in), the blower is always remote and not factory installed so a 9 ft flexible main hose is included. Please note that the positioning of the system's control could be in conflict with the door if one was installed on the unit. To insure compatibility, please contact customer service.
3	The blower is not factory installed (remote). 9 ft flexible main hose included. Please note that the positioning of the system's control could be in conflict with the door if one was installed on the unit. To insure compatibility, please contact customer service.
4	For details on pump position and requirements, see technical drawings on https://www.maax.com. When there is a pump position A or B indicated on the technical drawing, please specify position when ordering.
5	For details on blower position and requirements, see technical drawings on https://www.maax.com. When there is a blower position A or B indicated on the technical drawing, please specify position when ordering.
6	Specify 3/8 (Lite option) or 2 in. on deck height. If ordering unit with an apron, only 2 in. deck height is available.
8	Two 6 in. or 12 in. metal or acrylic grab bars are optional. Factory installed, only one positioning is possible (see technical drawings on https://www.maax.com).
54	A selection of units come with an access panel by default when equipped with a system. However, if the unit is only equipped with chromatherapy, the access panel will not be provided by default.

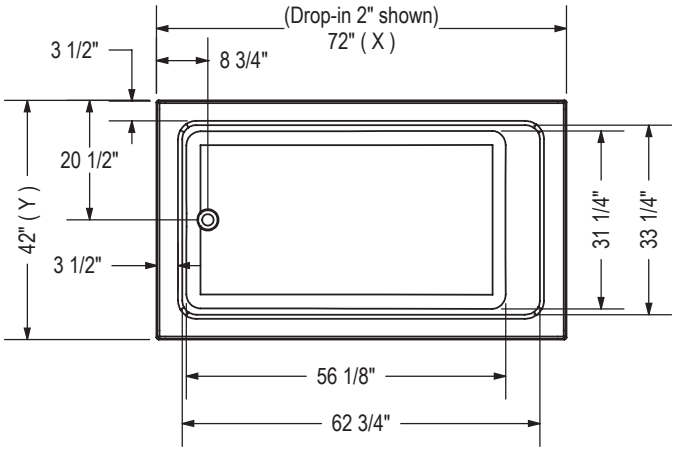

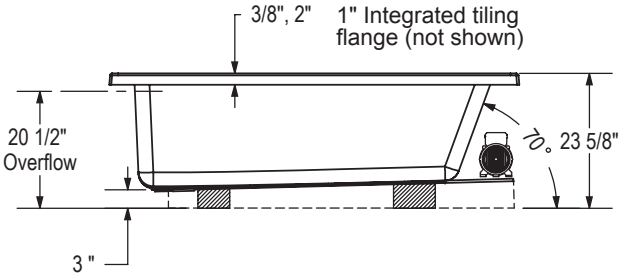

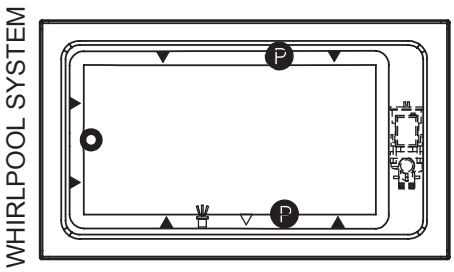

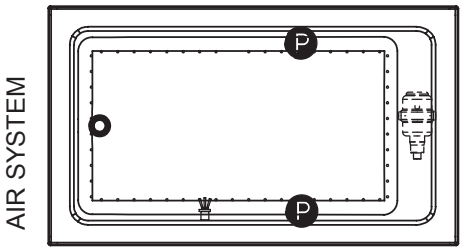

P : Indicates optional grab bar positioning
(▲) : Indicates whirlpool jets positioning
(△) : Indicates suction positioning
(●) : Indicates Aerofeel airjets positioning
( ) : Indicates chromatherapy light positioning

	DROP IN 2"	DROP IN 3/8"	ALCOVE / CORNER
X	72"	71 3/4"	71 1/2"
Y	42"	41 1/2"	41 5/8"

APRON (alcove version only)

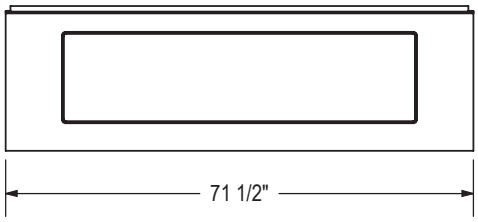

Technical drawing is universal for all 7242 configurations.
External dimension (X,Y) vary depending on configuration (see chart)

Wood support design may vary.
Integrated tiling flange: 1" height X 1/4" thickness (not shown)
Tiling flange position is determined by chosen configuration.

All dimensions are approximate.
Structure measurement must be verified against the unit to ensure proper fit.

Pose 7242 IF

Material : Acrylic

Features

- Rectangular shape bathtub with choices of two deck heights (3/8 or 2 in.) Please specify when ordering
- Drop-in or undermount [10] installation; model also available with integrated flange (IF) for alcove installation
- Textured floor
- Ample deck space for faucet installation
- Skirt with or without access panel available

POSE 7242 - 101461

SKU	System	Color	Configuration	Dimensions & Weight	Packaging	MSRP
101461-000-001-100	Soaker - No System	White	End Drain	72” x 42” x 23 5/8” / 95 lb	49 ft³	$ 2041
101461-001-001-100	Whirlpool [1 4]					$ 3828
101461-002-001-100	Multi-Pack [9]					$ 9205
101461-096-001-100	Combined Whirlpool & Aeroeffect [1 3]					$ 6353
101461-103-001-100	Aeroeffect [1 2 5]					$ 5054

POSE 7242 IF - 106213

SKU	System	Color	Configuration	Dimensions & Weight	Packaging	MSRP
106213-000-001-103	Soaker - No System	White	Left Drain	72” x 42” x 23 5/8” / 95 lb	49 ft³	$ 2041
106213-000-001-104			Right Drain			$ 2041
106213-002-001-101	Multi-Pack [9]		Left Drain			$ 9205
106213-002-001-102			Right Drain			$ 9205
106213-L-001-001	Whirlpool [1 4]		Left Drain			$ 3828
106213-L-096-001	Combined Whirlpool & Aeroeffect [1 3]					$ 6353
106213-L-103-001	Aeroeffect [1 2 5]					$ 5054
106213-R-001-001	Whirlpool [1 4]		Right Drain			$ 3828
106213-R-096-001	Combined Whirlpool & Aeroeffect [1 3]					$ 6353
106213-R-103-001	Aeroeffect [1 2 5]					$ 5054

COMMON OPTIONS

SKU	Description	MSRP
OPT10095	Water heater assembly for whirlpool and combined systems (factory installed)	$ 1033
OPT10106-084	Metal trim kit for whirlpool and combined systems (factory installed) Available colors: Chrome **(084)** and Brushed Nickel **(105)**	$ 728
OPT10106-105		$ 728
OPT10260-084	Two 6-in. acrylic grab bars (factory installed) [8] Available colors: White **(001)**, Bone **(004)**, Biscuit **(007)**, Chrome **(084)** and Brushed Nickel **(105)**	$ 392
OPT10260-007		$ 392
OPT10260-004		$ 392
OPT10260-105		$ 392
OPT10260-001		$ 392
OPT20029-105	Metal trim kit for air push control (factory installed) Available colors: Chrome **(084)** and Brushed Nickel **(105)**	$ 82
OPT20029-084		$ 82
OPT20137-004	Cable-operated waste and overflow (16 in. to 22 in.) (included in product packaging when purchased) Available colors: White **(001)**, Bone **(004)**, Chrome **(084)** and Brushed Nickel **(105)**	$ 362
OPT20137-084		$ 362
OPT20137-105		$ 362
OPT20137-001		$ 362

COMMON OPTIONS

SKU	Description	MSRP
OPT10053	One chromatherapy light (factory installed) [54]	$ 790
101955-000-001-100	Acrylic apron without access panel. Specify: Standard colors: White **(001)**, Bone **(004)**, Biscuit **(007)**	$ 605
101958-000-001-100	Acrylic apron with access panel. Specify: Standard colors: White **(001)**, Bone **(004)**, Biscuit **(007)**	$ 720
OPT20205	Lite option 3/8 in. thin deck [6] When chosen, this option is offered at no cost	$ 0

ACCESSORIES

SKU	Description	MSRP
10006923	Flexible main hose (9 ft. extension) for air push control air massage - Kit (sold separately)	$ 209
10004306-001	White foam cushion with 2 suction pads (sold separately) Available color: White **(001)**	$ 138
10028641-084	Metal trim kit for Whirlpool and combined systems (sold separately) Available colors: Chrome **(084)** and Brushed Nickel **(105)**	$ 728
10028641-105		$ 728
10034250-084	Metal trim kit for Aeroeffect with Air Push Control (sold separately) Available colors: Chrome **(084)** and Brushed Nickel **(105)**	$ 82
10034250-105		$ 82
10022491-004	Cable-operated waste and overflow (16 in. to 22 in.) (sold separately) Available colors: White **(001)**, Bone **(004)**, Chrome **(084)** and Brushed Nickel **(105)**	$ 362

FOOTNOTES

No	Description
6	Specify 3/8 (Lite option) or 2 in. on deck height. If ordering unit with an apron, only 2 in. deck height is available.
8	Two 6 in. or 12 in. metal or acrylic grab bars are optional. Factory installed, only one positioning is possible (see technical drawings on https://www.maax.com).
10	Systems not available with units installed undermount.
54	A selection of units come with an access panel by default when equipped with a system. However, if the unit is only equipped with chromatherapy, the access panel will not be provided by default.

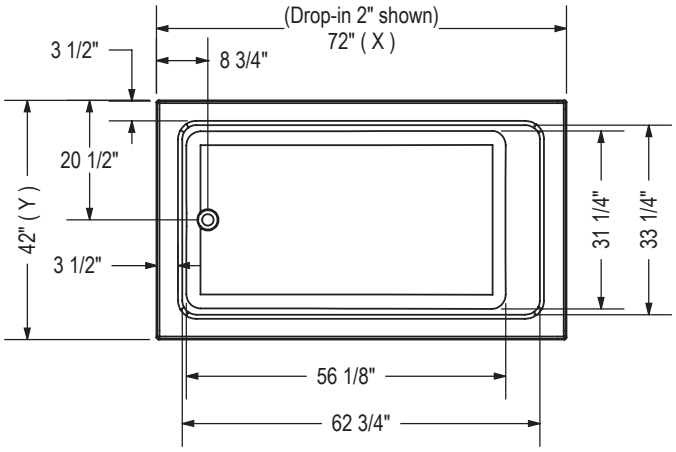

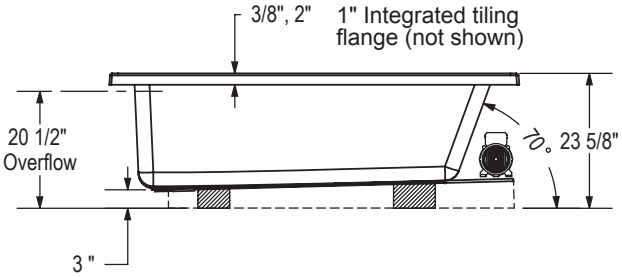

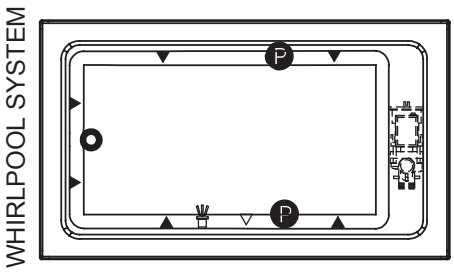

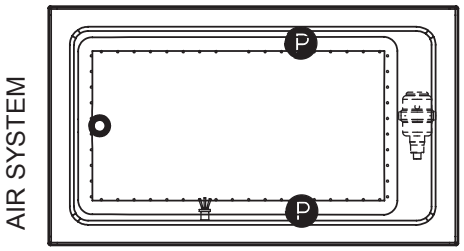

P : Indicates optional grab bar positioning
(▲) : Indicates whirlpool jets positioning
(△) : Indicates suction positioning
(●) : Indicates Aerofeel airjets positioning
( ) : Indicates chromatherapy light positioning

Technical drawing is universal for all 7242 configurations.
External dimension (X,Y) vary depending on configuration (see chart)

	DROP IN 2"	DROP IN 3/8"	ALCOVE / CORNER
X	72"	71 3/4"	71 1/2"
Y	42"	41 1/2"	41 5/8"

APRON (alcove version only)

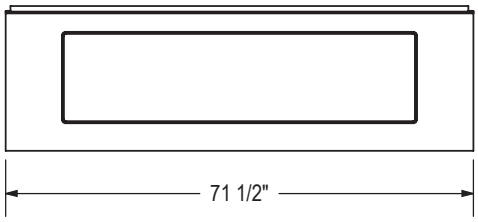

Wood support design may vary.
Integrated tiling flange: 1" height X 1/4" thickness (not shown)
Tiling flange position is determined by chosen configuration.

All dimensions are approximate.
Structure measurement must be verified against the unit to ensure proper fit.

Rubix 6030

Material : Acrylic

Features

- Alcove installation
- Modern cubic design
- Acrylic surface resistant to stains
- Available in left-hand and right-hand drain configurations to fit your specific bathroom layout
- High-gloss finish adds luxurious look to your bathroom
- Integrated flat apron and tiling flange on three sides facilitate a quick and simple installation with no need to worry about leakage or water infiltration
- Adds a modern look to any bathroom
- Compatible with UTile for an easy wall solution
- Maximized bathing designed for optimal comfort

RUBIX 6030 - 105815

SKU	System	Color	Configuration	Dimensions & Weight	Packaging	MSRP
105815-000-001-001	Soaker - No System	White	Left Drain	59 3/4” x 30” x 18 3/8” / 75 lb	13.98 ft^3	$ 1356
105815-000-001-002			Right Drain			$ 1356

RUBIX 6030 AFR - 105816

SKU	System	Color	Configuration	Dimensions & Weight	Packaging	MSRP
105816-000-001-101	Soaker - No System	White	Left Drain	59 3/4” x 30” x 20 3/8” / 75 lb	15.5 ft^3	$ 1356
105816-000-001-102			Right Drain			$ 1356

COMMON OPTIONS

SKU	Description	MSRP
OPT20137-004	Cable-operated waste and overflow (16 in. to 22 in.) (included in product packaging when purchased) Available colors: White **(001)**, Bone **(004)**, Chrome **(084)** and Brushed Nickel **(105)**	$ 362
OPT20137-084		$ 362
OPT20137-105		$ 362
OPT20137-001		$ 362

ACCESSORIES

SKU	Description	MSRP
10004306-001	White foam cushion with 2 suction pads (sold separately) Available color: White **(001)**	$ 138
10022491-004	Cable-operated waste and overflow (16 in. to 22 in.) (sold separately) Available colors: White **(001)**, Bone **(004)**, Chrome **(084)** and Brushed Nickel **(105)**	$ 362

RECOMMENDED DOORS - VISIT OUR WEBSITE FOR A COMPLETE LIST OF RECOMMENDED DOORS

SKU	Product Name	Pag.
139398	Halo 56 ½-59 x 59 - 8mm	990
139351	Incognito 57 56-59 x 56 3/4 in. 6mm Tub Door	1007
139354	Incognito 57 56-59 x 56 3/4 in. 8mm Tub Door	1011
135330	Incognito 57 Shaker 56-59 x 56 3/4 in. 8mm Tub Door	1005
135695	Revelation Square 56-59 x 56 ¾-59 ¼ - 8mm	1022
135692	Revelation Square 56-59 x 56 ¾-58 ¼ - 6mm	1020
136692	Revelation Round 56-59 x 56 3/4-59 1/4	1017
136695	Revelation Round 56-59 x 56 ¾-59 ¼ - 8 mm	1018
135320	Uptown 56-59 x 58 in. 8 mm	1024
136270	Duel 56-59 x 55 1/2-59	1003

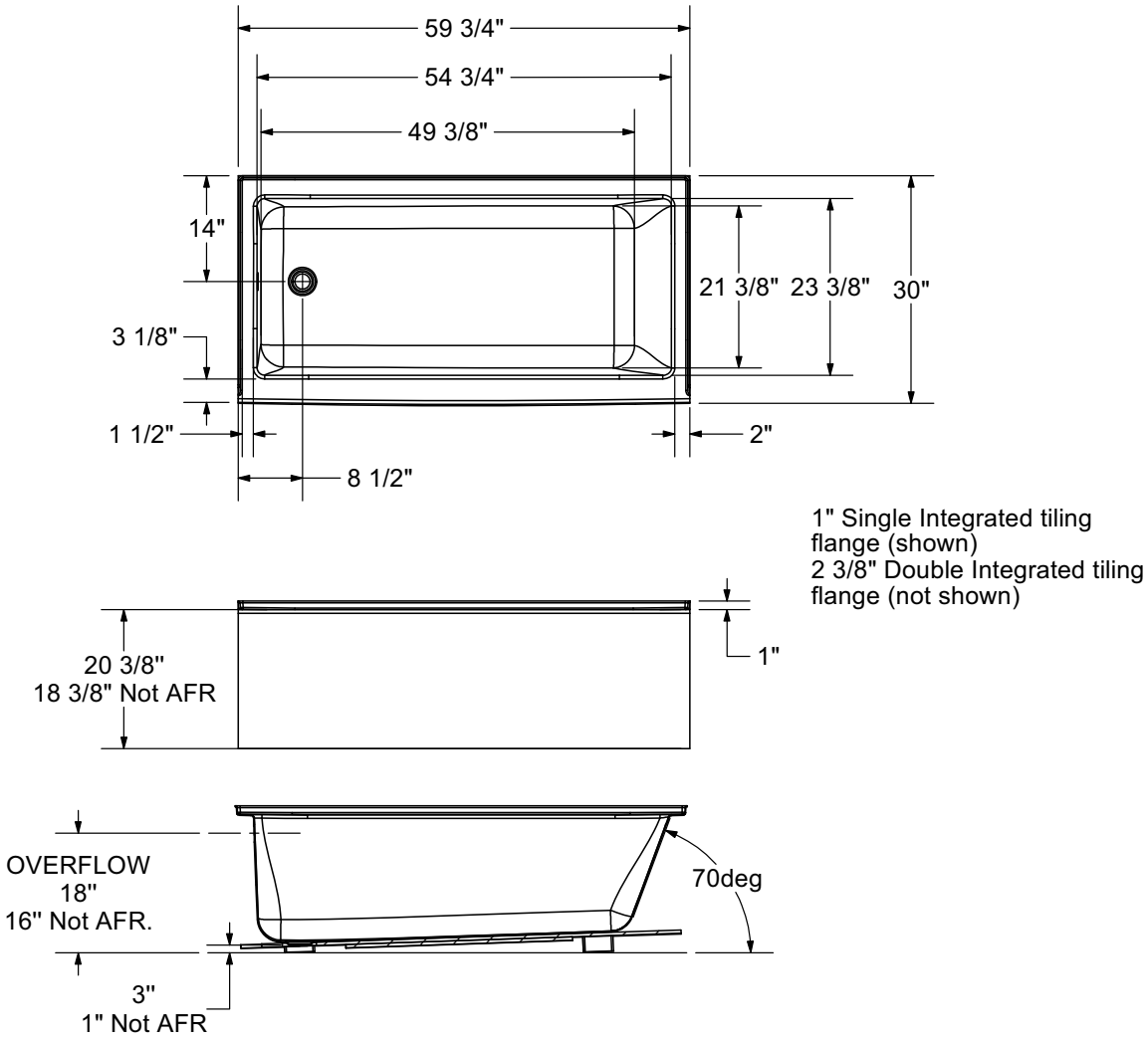

Wood support design may vary.
Single Integrated tiling flange: 1" height x 1/4'' thickness (shown)
Double Integrated tiling flange: 2 3/8" height (not shown)
All dimensions are approximate. Structure measurements must be verified against the unit to ensure proper fit.

Rubix 6030 DTF

Material : Acrylic

Features

- Alcove installation
- Modern cubic design
- Acrylic surface resistant to stains
- Available in left-hand and right-hand drain configurations to fit your specific bathroom layout
- Integrated double tiling flange
- High-gloss finish adds luxurious look to your bathroom
- Adds a modern look to any bathroom
- Maximized bathing designed for optimal comfort

RUBIX 6030 DTF - 105817

SKU	System	Color	Configuration	Dimensions & Weight	Packaging	MSRP
105817-000-001-103	Soaker - No System	White	Left Drain	59 3/4” x 30” x 18 3/8” / 77 lb	13.98 ft^3	$ 1356
105817-000-001-104			Right Drain			$ 1356

RUBIX 6030 AFR DTF - 105818

SKU	System	Color	Configuration	Dimensions & Weight	Packaging	MSRP
105818-000-001-105	Soaker - No System	White	Left Drain	59 3/4” x 30” x 20 3/8” / 77 lb	21.14 ft^3	$ 1356
105818-000-001-106			Right Drain			$ 1356

COMMON OPTIONS

SKU	Description	MSRP
OPT20137-004	Cable-operated waste and overflow (16 in. to 22 in.) (included in product packaging when purchased) Available colors: White **(001)**, Bone **(004)**, Chrome **(084)** and Brushed Nickel **(105)**	$ 362
OPT20137-084		$ 362
OPT20137-105		$ 362
OPT20137-001		$ 362

ACCESSORIES

SKU	Description	MSRP
10004306-001	White foam cushion with 2 suction pads (sold separately) Available color: White **(001)**	$ 138
10022491-004	Cable-operated waste and overflow (16 in. to 22 in.) (sold separately) Available colors: White **(001)**, Bone **(004)**, Chrome **(084)** and Brushed Nickel **(105)**	$ 362

RECOMMENDED DOORS - VISIT OUR WEBSITE FOR A COMPLETE LIST OF RECOMMENDED DOORS

SKU	Product Name	Pag.
139398	Halo 56 ½-59 x 59 - 8mm	990
139351	Incognito 57 56-59 x 56 3/4 in. 6mm Tub Door	1007
139354	Incognito 57 56-59 x 56 3/4 in. 8mm Tub Door	1011
135330	Incognito 57 Shaker 56-59 x 56 3/4 in. 8mm Tub Door	1005
135695	Revelation Square 56-59 x 56 ¾-59 ¼ - 8mm	1022
135692	Revelation Square 56-59 x 56 ¾-58 ¼ - 6mm	1020
136692	Revelation Round 56-59 x 56 3/4-59 1/4	1017
136695	Revelation Round 56-59 x 56 ¾-59 ¼ - 8 mm	1018
135320	Uptown 56-59 x 58 in. 8 mm	1024
136270	Duel 56-59 x 55 1/2-59	1003
138760	Inverto 56-59 x 55 ½-59 - 8mm	1013
138485	Vela 56 ½-59 x 59 - 8mm	988

DTF

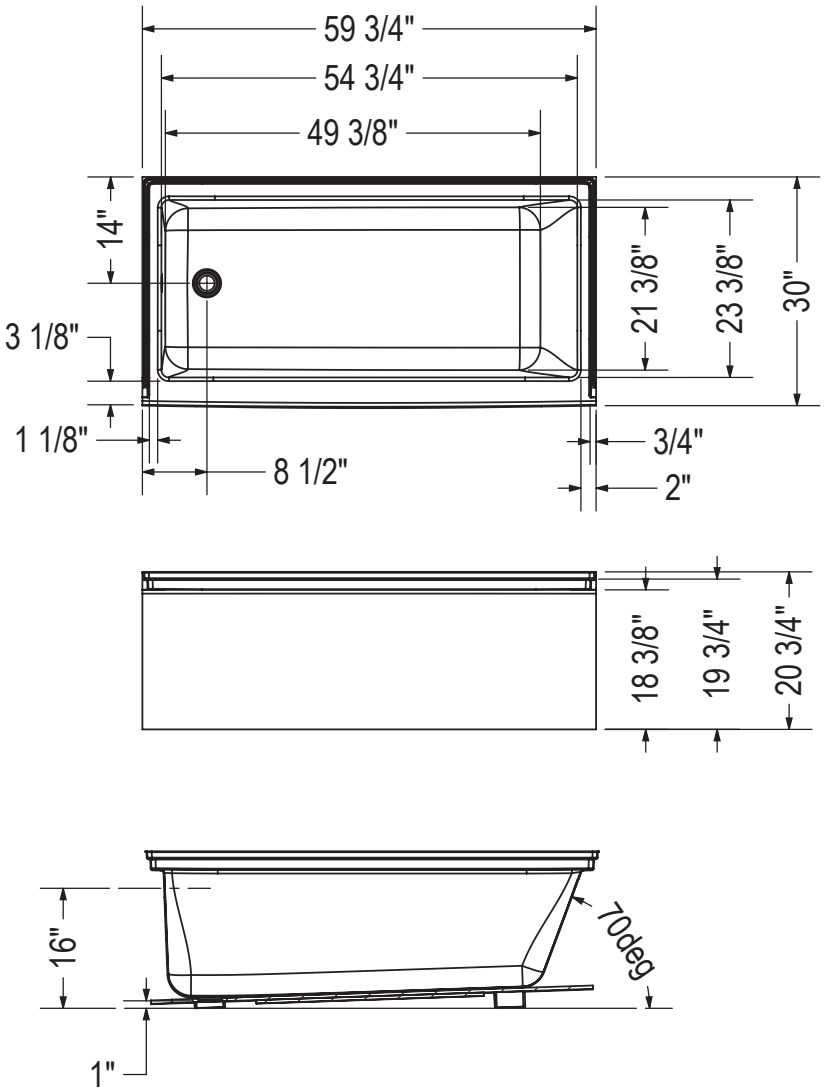

All dimensions are approximate. Structure measurements must be verified against the unit to ensure proper fit.

Rubix 6032

Material : Acrylic

Features

- Alcove installation
- Modern cubic design
- Acrylic surface resistant to stains
- Available in left-hand and right-hand drain configurations to fit your specific bathroom layout
- High-gloss finish adds luxurious look to your bathroom
- AFR unit which accommodates the installation of drain, waste and overflow above the floor
- Adds a modern look to any bathroom
- Compatible with UTile for an easy wall solution
- Maximized bathing designed for optimal comfort

RUBIX 6032 AFR - 105704

SKU	System	Color	Configuration	Dimensions & Weight	Packaging	MSRP
105704-000-001-101	Soaker - No System	White	Left Drain	59 3/4” x 32” x 20 3/8” / 80 lb	15.5 ft³	$ 1395
105704-000-001-102			Right Drain			$ 1395

RUBIX 6032 - 105705

SKU	System	Color	Configuration	Dimensions & Weight	Packaging	MSRP
105705-000-001-001	Soaker - No System	White	Left Drain	59 3/4” x 32” x 18 3/8” / 80 lb	13.98 ft³	$ 1395
105705-000-001-002			Right Drain			$ 1395

COMMON OPTIONS

SKU	Description	MSRP
OPT20137-004	Cable-operated waste and overflow (16 in. to 22 in.) (included in product packaging when purchased) Available colors: White **(001)**, Bone **(004)**, Chrome **(084)** and Brushed Nickel **(105)**	$ 362
OPT20137-084		$ 362
OPT20137-105		$ 362
OPT20137-001		$ 362

ACCESSORIES

SKU	Description	MSRP
10004306-001	White foam cushion with 2 suction pads (sold separately) Available color: White **(001)**	$ 138
10022491-004	Cable-operated waste and overflow (16 in. to 22 in.) (sold separately) Available colors: White **(001)**, Bone **(004)**, Chrome **(084)** and Brushed Nickel **(105)**	$ 362

RECOMMENDED DOORS - VISIT OUR WEBSITE FOR A COMPLETE LIST OF RECOMMENDED DOORS

SKU	Product Name	Pag.
139398	Halo 56 ½-59 x 59 - 8mm	990
139351	Incognito 57 56-59 x 56 3/4 in. 6mm Tub Door	1007
139354	Incognito 57 56-59 x 56 3/4 in. 8mm Tub Door	1011
135330	Incognito 57 Shaker 56-59 x 56 3/4 in. 8mm Tub Door	1005
135695	Revelation Square 56-59 x 56 ¾-59 ¼ - 8mm	1022
135692	Revelation Square 56-59 x 56 ¾-58 ¼ - 6mm	1020
136692	Revelation Round 56-59 x 56 3/4-59 1/4	1017
136695	Revelation Round 56-59 x 56 ¾-59 ¼ - 8 mm	1018
135320	Uptown 56-59 x 58 in. 8 mm	1024
136270	Duel 56-59 x 55 1/2-59	1003
138760	Inverto 56-59 x 55 ½-59 - 8mm	1013

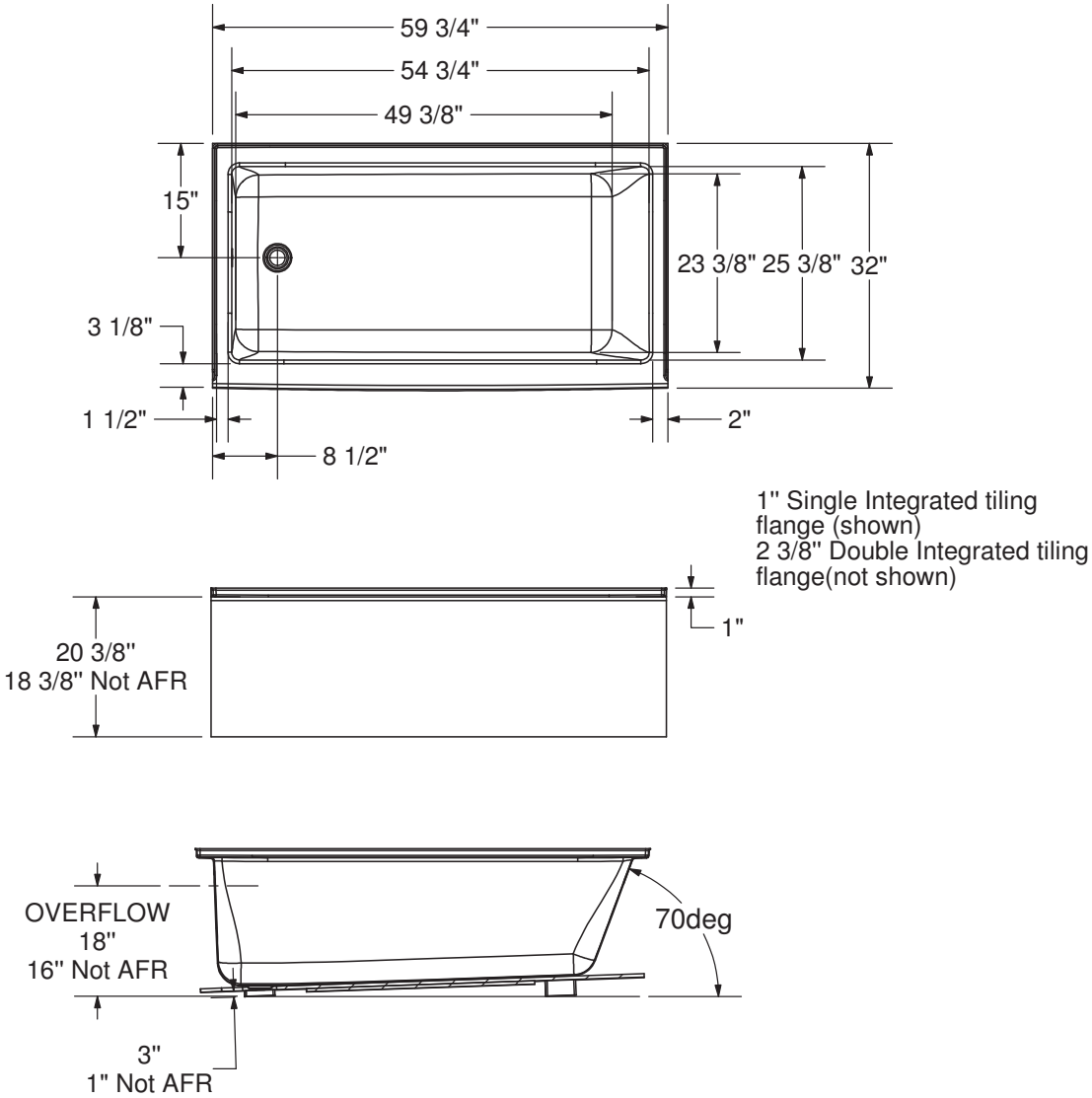

Wood support design may vary.
Single Integrated tiling flange: 1" height x 1/4" thickness (shown)
All dimensions are approximate. Structure measurements must be verified against the unit to ensure proper fit.

Rubix 6032 DTF

Material : Acrylic

Features

- Alcove installation
- Modern cubic design
- Acrylic surface resistant to stains
- Available in left-hand and right-hand drain configurations to fit your specific bathroom layout
- Integrated double tiling flange
- High-gloss finish adds luxurious look to your bathroom
- Adds a modern look to any bathroom
- Maximized bathing designed for optimal comfort

RUBIX 6032 DTF - 105819

SKU	System	Color	Configuration	Dimensions & Weight	Packaging	MSRP
105819-000-001-103	Soaker - No System	White	Left Drain	59 3/4” x 32” x 18 3/8” / 80 lb	20.34 ft^3	$ 1395
105819-000-001-104			Right Drain			$ 1395

RUBIX 6032 AFR DTF - 105820

SKU	System	Color	Configuration	Dimensions & Weight	Packaging	MSRP
105820-000-001-105	Soaker - No System	White	Left Drain	59 3/4” x 32” x 20 3/8” / 80 lb	22.55 ft^3	$ 1395
105820-000-001-106			Right Drain			$ 1395

COMMON OPTIONS

SKU	Description	MSRP
OPT20137-004	Cable-operated waste and overflow (16 in. to 22 in.) (included in product packaging when purchased) Available colors: White **(001)**, Bone **(004)**, Chrome **(084)** and Brushed Nickel **(105)**	$ 362
OPT20137-084		$ 362
OPT20137-105		$ 362
OPT20137-001		$ 362

ACCESSORIES

SKU	Description	MSRP
10004306-001	White foam cushion with 2 suction pads (sold separately) Available color: White **(001)**	$ 138
10022491-004	Cable-operated waste and overflow (16 in. to 22 in.) (sold separately) Available colors: White **(001)**, Bone **(004)**, Chrome **(084)** and Brushed Nickel **(105)**	$ 362

RECOMMENDED DOORS - VISIT OUR WEBSITE FOR A COMPLETE LIST OF RECOMMENDED DOORS

SKU	Product Name	Pag.
139398	Halo 56 ½-59 x 59 - 8mm	990
139351	Incognito 57 56-59 x 56 3/4 in. 6mm Tub Door	1007
139354	Incognito 57 56-59 x 56 3/4 in. 8mm Tub Door	1011
135330	Incognito 57 Shaker 56-59 x 56 3/4 in. 8mm Tub Door	1005
135695	Revelation Square 56-59 x 56 ¾-59 ¼ - 8mm	1022
135692	Revelation Square 56-59 x 56 ¾-58 ¼ - 6mm	1020
136692	Revelation Round 56-59 x 56 3/4-59 1/4	1017
136695	Revelation Round 56-59 x 56 ¾-59 ¼ - 8 mm	1018
135320	Uptown 56-59 x 58 in. 8 mm	1024
136270	Duel 56-59 x 55 1/2-59	1003
138760	Inverto 56-59 x 55 ½-59 - 8mm	1013
138485	Vela 56 ½-59 x 59 - 8mm	988

DTF

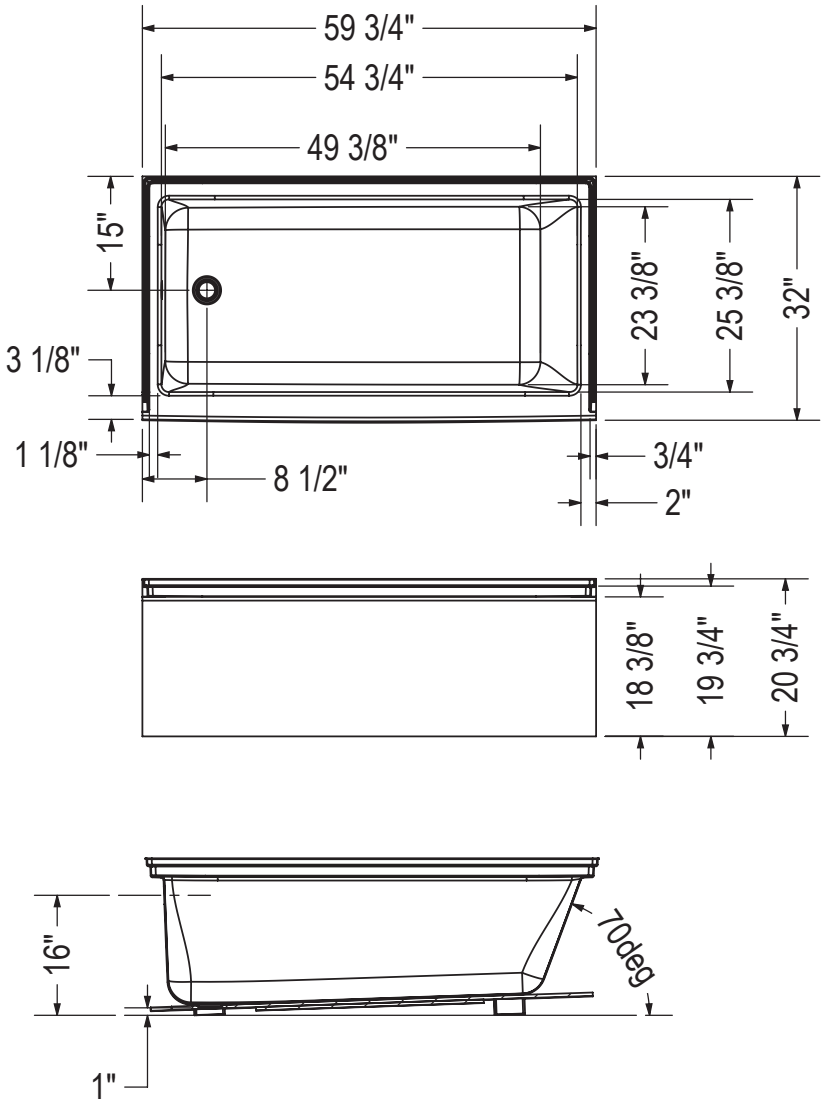

All dimensions are approximate. Structure measurements must be verified against the unit to ensure proper fit.

Go to Table of Contents

Rubix 6632

Material : Acrylic

Features

- Alcove installation
- Modern cubic design
- Acrylic surface resistant to stains
- Available in left-hand and right-hand drain configurations to fit your specific bathroom layout
- High-gloss finish adds luxurious look to your bathroom
- AFR unit which accommodates the installation of drain, waste and overflow above the floor
- Adds a modern look to any bathroom
- Compatible with UTile for an easy wall solution
- Maximized bathing designed for optimal comfort

RUBIX 6632 AFR - 105734

SKU	System	Color	Configuration	Dimensions & Weight	Packaging	MSRP
105734-000-001-101	Soaker - No System	White	Left Drain	65 3/4” x 32” x 20 3/8” / 96 lb	19.19 ft^3	$ 1900
105734-000-001-102			Right Drain			$ 1900

RUBIX 6632 - 105735

SKU	System	Color	Configuration	Dimensions & Weight	Packaging	MSRP
105735-000-001-001	Soaker - No System	White	Left Drain	65 3/4” x 32” x 18 3/8” / 86 lb	38.19 ft^3	$ 1900
105735-000-001-002			Right Drain			$ 1900

COMMON OPTIONS

SKU	Description	MSRP
OPT20137-004	Cable-operated waste and overflow (16 in. to 22 in.) (included in product packaging when purchased) Available colors: White **(001)**, Bone **(004)**, Chrome **(084)** and Brushed Nickel **(105)**	$ 362
OPT20137-084		$ 362
OPT20137-105		$ 362
OPT20137-001		$ 362

ACCESSORIES

SKU	Description	MSRP
10004306-001	White foam cushion with 2 suction pads (sold separately) Available color: White **(001)**	$ 138
10022491-004	Cable-operated waste and overflow (16 in. to 22 in.) (sold separately) Available colors: White **(001)**, Bone **(004)**, Chrome **(084)** and Brushed Nickel **(105)**	$ 362

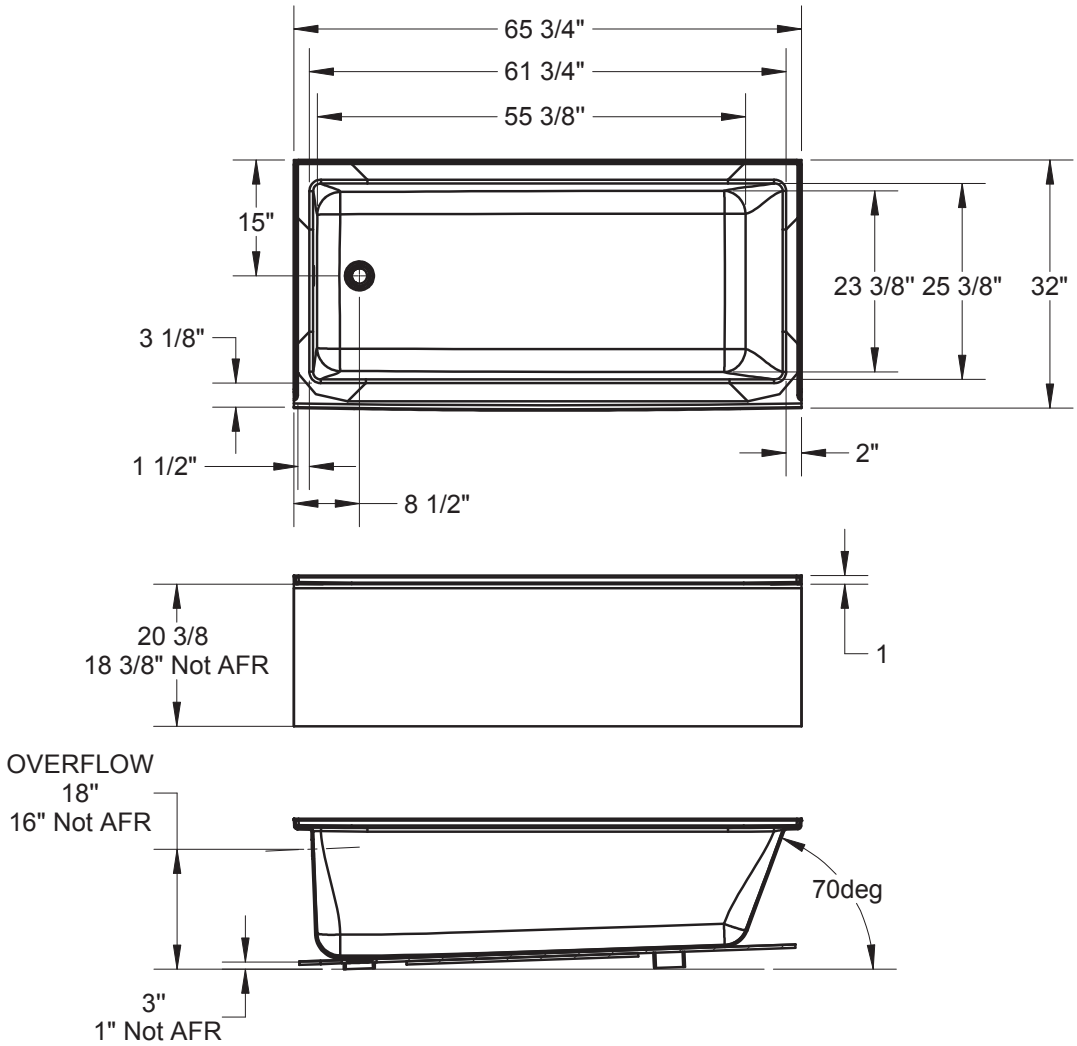

Wood support design may vary.
Single Integrated tiling flange: 1" height x 1/4'' thickness (shown)
All dimensions are approximate. Structure measurements must be verified against the unit to ensure proper fit.

Go to Table of Contents

Rubix Access 6030

Material : Acrylic

Features

- Alcove installation
- Modern cubic design
- Acrylic surface resistant to stains
- Available in left-hand and right-hand drain configurations to fit your specific bathroom layout
- High-gloss finish adds luxurious look to your bathroom
- Anti-slip certified floor, and a low threshold to cross over for (14-in) maximum safety. Textured floor meets ADA, ANSI or CSA requirements. Compliant with accessibility codes when properly installed
- Adds a modern look to any bathroom
- Compatible with UTile for an easy wall solution
- Maximized bathing designed for optimal comfort

RUBIX ACCESS 6030 - 106348

SKU	System	Color	Configuration	Dimensions & Weight	Packaging	MSRP
106348-000-001-001	Soaker - No System	White	Left Drain	59 7/8” x 30 1/8” x 14” / 75 lb	13.73 ft^3	$ 1313
106348-000-001-002			Right Drain			$ 1313

RUBIX ACCESS 6030 AFR - 106349

SKU	System	Color	Configuration	Dimensions & Weight	Packaging	MSRP
106349-000-001-100	Soaker - No System	White	Left Drain	59 7/8” x 30 1/8” x 16” / 75 lb	12.2 ft^3	$ 1313
106349-000-001-101			Right Drain			$ 1313

COMMON OPTIONS

SKU	Description	MSRP
OPT20137-004	Cable-operated waste and overflow (16 in. to 22 in.) (included in product packaging when purchased) Available colors: White **(001)**, Bone **(004)**, Chrome **(084)** and Brushed Nickel **(105)**	$ 362
OPT20137-084		$ 362
OPT20137-105		$ 362
OPT20137-001		$ 362

ACCESSORIES

SKU	Description	MSRP
10004306-001	White foam cushion with 2 suction pads (sold separately) Available color: White **(001)**	$ 138
10022491-004	Cable-operated waste and overflow (16 in. to 22 in.) (sold separately) Available colors: White **(001)**, Bone **(004)**, Chrome **(084)** and Brushed Nickel **(105)**	$ 362

RECOMMENDED DOORS - VISIT OUR WEBSITE FOR A COMPLETE LIST OF RECOMMENDED DOORS

SKU	Product Name	Pag.
139398	Halo 56 ½-59 x 59 - 8mm	990
139351	Incognito 57 56-59 x 56 3/4 in. 6mm Tub Door	1007
139354	Incognito 57 56-59 x 56 3/4 in. 8mm Tub Door	1011
135330	Incognito 57 Shaker 56-59 x 56 3/4 in. 8mm Tub Door	1005
135695	Revelation Square 56-59 x 56 ¾-59 ¼ - 8mm	1022
135692	Revelation Square 56-59 x 56 ¾-58 ¼ - 6mm	1020
136692	Revelation Round 56-59 x 56 3/4-59 1/4	1017
136695	Revelation Round 56-59 x 56 ¾-59 ¼ - 8 mm	1018
135320	Uptown 56-59 x 58 in. 8 mm	1024

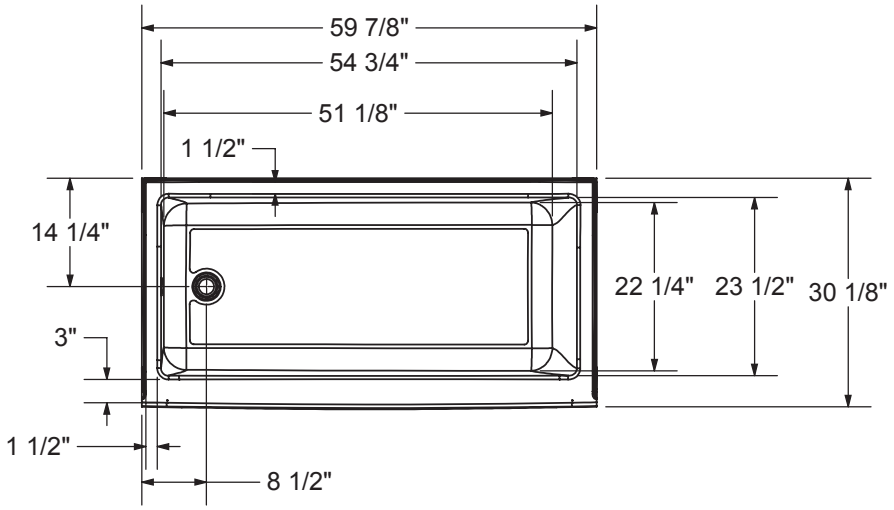

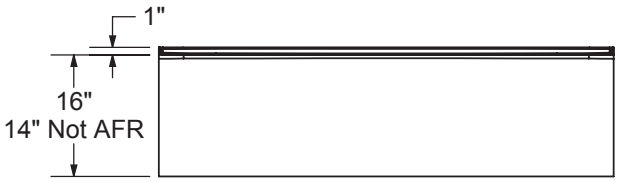

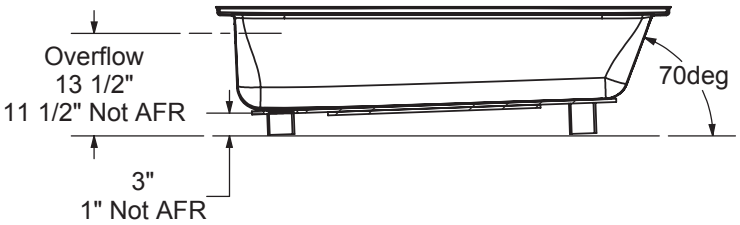

Wood support design may vary.
All dimensions are approximate. Structure measurements must be verified against the unit to ensure proper fit.

Vichy 6032 IFS

Material : Acrylic

Features

- Relaxing armrests and ergonomic backrest
- Headrest
- Integrated apron with optional access panel (specify when ordering)
- Tilling flange
- Available with right or left-hand drain

VICHY 6032 - 102941

SKU	System	Color	Configuration	Dimensions & Weight	Packaging	MSRP
102941-000-001-001	Soaker - No System	White	Left Drain	59 7/8” x 33 3/8” x 20” / 78 lb	26 ft³	$ 1428
102941-000-001-002			Right Drain			$ 1428
102941-001-001-001	Whirlpool [1 4]		Left Drain			$ 3215
102941-001-001-002			Right Drain			$ 3215
102941-103-001-100	Aeroeffect [1 2 5]		Left Drain			$ 4441
102941-103-001-101			Right Drain			$ 4441
102941-L-096-001	Combined Whirlpool & Aeroeffect [1 3]		Left Drain			$ 5740
102941-R-096-001			Right Drain			$ 5740

COMMON OPTIONS

SKU	Description	MSRP
OPT20029-105	Metal trim kit for air push control (factory installed) Available colors: Chrome **(084)** and Brushed Nickel **(105)**	$ 82
OPT20029-084		$ 82
OPT20137-004	Cable-operated waste and overflow (16 in. to 22 in.) (included in product packaging when purchased) Available colors: White **(001)**, Bone **(004)**, Chrome **(084)** and Brushed Nickel **(105)**	$ 362
OPT20137-084		$ 362
OPT20137-105		$ 362
OPT20137-001		$ 362
OPT10053	One chromatherapy light (factory installed) [54]	$ 790
OPT10095	Water heater assembly for whirlpool and combined systems (factory installed)	$ 1033
OPT10106-084	Metal trim kit for whirlpool and combined systems (factory installed) Available colors: Chrome **(084)** and Brushed Nickel **(105)**	$ 728
OPT10106-105		$ 728

ACCESSORIES

SKU	Description	MSRP
10006923	Flexible main hose (9 ft. extension) for air push control air massage - Kit (sold separately)	$ 209
10004306-001	White foam cushion with 2 suction pads (sold separately) Available color: White **(001)**	$ 138
10006887-105	Metal trim kit for Whirlpool and combined systems (sold separately) Available colors: Chrome **(084)** and Brushed Nickel **(105)**	$ 728
10006887-084		$ 728
10034250-084	Metal trim kit for Aeroeffect with Air Push Control (sold separately) Available colors: Chrome **(084)** and Brushed Nickel **(105)**	$ 82
10034250-105		$ 82
10022491-004	Cable-operated waste and overflow (16 in. to 22 in.) (sold separately) Available colors: White **(001)**, Bone **(004)**, Chrome **(084)** and Brushed Nickel **(105)**	$ 362

FOOTNOTES

No	Description
1	Components for standard colour units equipped with systems are colour-coordinated. Trim kit and/or air push with metallic finish can be added (additional charge applies). For non-standard colour units, please specify trim kit and/or air push colour (additional charge applies for metallic finishes). Please note that the positioning of the system's control could be in conflict with the door if one was installed on the unit. To insure compatibility, please contact customer service.
2	Please order flexible main hose 10006923 for installation of the blower further than 3 ft from the bathtub. For the Tandem models and the Serenade models (freestanding and drop-in), the blower is always remote and not factory installed so a 9 ft flexible main hose is included. Please note that the positioning of the system's control could be in conflict with the door if one was installed on the unit. To insure compatibility, please contact customer service.
3	The blower is not factory installed (remote). 9 ft flexible main hose included. Please note that the positioning of the system's control could be in conflict with the door if one was installed on the unit. To insure compatibility, please contact customer service.
4	For details on pump position and requirements, see technical drawings on https://www.maax.com. When there is a pump position A or B indicated on the technical drawing, please specify position when ordering.
5	For details on blower position and requirements, see technical drawings on https://www.maax.com. When there is a blower position A or B indicated on the technical drawing, please specify position when ordering.
11	Apron access panel is included with a Whirlpool or combined system.
54	A selection of units come with an access panel by default when equipped with a system. However, if the unit is only equipped with chromatherapy, the access panel will not be provided by default.

RECOMMENDED DOORS - VISIT OUR WEBSITE FOR A COMPLETE LIST OF RECOMMENDED DOORS

SKU	Product Name	Pag.
139398	Halo 56 ½-59 x 59 - 8mm	990
139351	Incognito 57 56-59 x 56 3/4 in. 6mm Tub Door	1007
139354	Incognito 57 56-59 x 56 3/4 in. 8mm Tub Door	1011
135330	Incognito 57 Shaker 56-59 x 56 3/4 in. 8mm Tub Door	1005
135695	Revelation Square 56-59 x 56 ¾-59 ¼ - 8mm	1022
135692	Revelation Square 56-59 x 56 ¾-58 ¼ - 6mm	1020
136692	Revelation Round 56-59 x 56 3/4-59 1/4	1017
136695	Revelation Round 56-59 x 56 ¾-59 ¼ - 8 mm	1018
135320	Uptown 56-59 x 58 in. 8 mm	1024
136270	Duel 56-59 x 55 1/2-59	1003
138760	Inverto 56-59 x 55 ½-59 - 8mm	1013
138485	Vela 56 ½-59 x 59 - 8mm	988
138480		986
134661	Kameleon SC 55-59 x 57 - 6mm	995
134573	Kameleon 55-59 x 57 - 8mm	997
134670	Kameleon SC 55-59 x 57 - 8mm	991
134561	Kameleon 55-59 x 57 - 6mm	999
105410	Polar 54-59 1/2 x 57 1/2 in.	1017
105409	Mika 54 - 59 ½ x 55 in.	1015

WHIRLPOOL SYSTEM

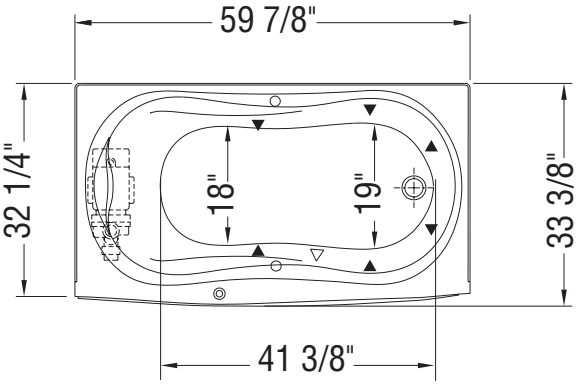

AIR SYSTEM

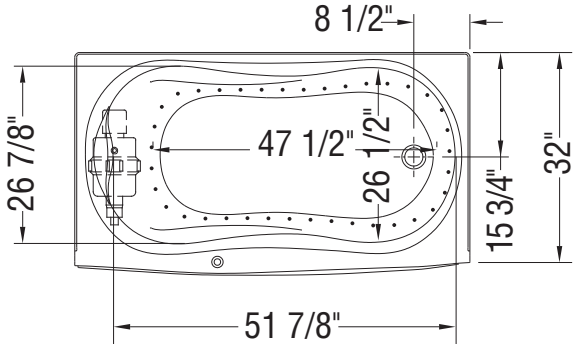

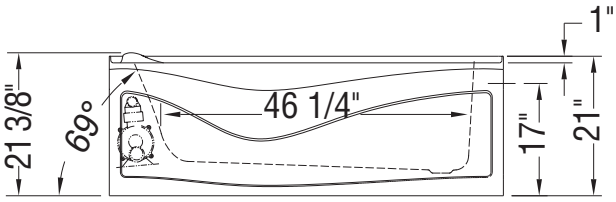

(▲) : Indicates Whirlpool jets positioning
(•) : Indicates airjets positioning
(△) : Indicates suction positioning

All dimensions are approximate. Structure measurements must be verified against the unit to ensure proper fit.

Mackenzie 6030

Material : AcrylX

Features

- Modern minimalist and comfortable design
- Integrated flat skirt and tiling flange
- Textured bottom
- Compatible with U tile shower wall panels
- Available in Above-the-Floor Rough (AFR) or not

MACKENZIE 6030 AFR - 106664

SKU	System	Color	Configuration	Dimensions & Weight	Packaging	MSRP
106664-L-000-002	Soaker - No System	White	Left Drain	59 3/4” x 31” x 20” / 71 lb	26.5 ft^3	$ 1472
106664-R-000-002			Right Drain			$ 1472

MACKENZIE 6030 - 106665

SKU	System	Color	Configuration	Dimensions & Weight	Packaging	MSRP
106665-000-002-100	Soaker - No System	White	Left Drain	59 3/4” x 31” x 18” / 71 lb	26.5 ft^3	$ 1472
106665-000-002-101			Right Drain			$ 1472

COMMON OPTIONS

SKU	Description	MSRP
OPT20137-004	Cable-operated waste and overflow (16 in. to 22 in.) (included in product packaging when purchased) Available colors: White **(001)**, Bone **(004)**, Chrome **(084)** and Brushed Nickel **(105)**	$ 362
OPT20137-084		$ 362
OPT20137-105		$ 362
OPT20137-001		$ 362

ACCESSORIES

SKU	Description	MSRP
10004306-001	White foam cushion with 2 suction pads (sold separately) Available color: White **(001)**	$ 138
10022491-004	Cable-operated waste and overflow (16 in. to 22 in.) (sold separately) Available colors: White **(001)**, Bone **(004)**, Chrome **(084)** and Brushed Nickel **(105)**	$ 362

RECOMMENDED DOORS - VISIT OUR WEBSITE FOR A COMPLETE LIST OF RECOMMENDED DOORS

SKU	Product Name	Pag.
139398	Halo 56 ½-59 x 59 - 8mm	990
139351	Incognito 57 56-59 x 56 3/4 in. 6mm Tub Door	1007
139354	Incognito 57 56-59 x 56 3/4 in. 8mm Tub Door	1011
135330	Incognito 57 Shaker 56-59 x 56 3/4 in. 8mm Tub Door	1005
135695	Revelation Square 56-59 x 56 ¾-59 ¼ - 8mm	1022
135692	Revelation Square 56-59 x 56 ¾-58 ¼ - 6mm	1020
136692	Revelation Round 56-59 x 56 3/4-59 1/4	1017
136695	Revelation Round 56-59 x 56 ¾-59 ¼ - 8 mm	1018
135320	Uptown 56-59 x 58 in. 8 mm	1024
136270	Duel 56-59 x 55 1/2-59	1003
138760	Inverto 56-59 x 55 ½-59 - 8mm	1013
138485	Vela 56 ½-59 x 59 - 8mm	988

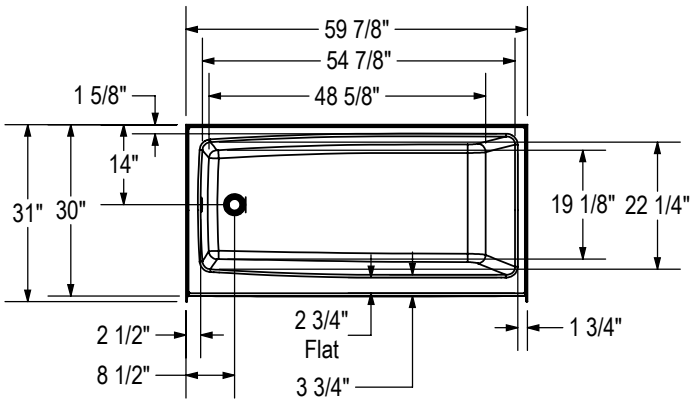

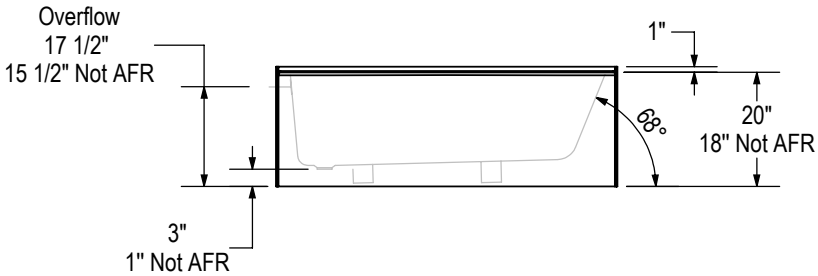

Wood support design may vary.

All dimensions are approximate. Structure measurements must be verified against the unit to ensure proper fit.

Mackenzie 6032

Material : AcrylX

Features

- Modern minimalist and comfortable design
- Integrated flat skirt and tiling flange
- Textured bottom
- Available in Above-the-Floor Rough (AFR) or not
- Compatible with U tile shower panels

MACKENZIE 6032 AFR - 106668

SKU	System	Color	Configuration	Dimensions & Weight	Packaging	MSRP
106668-000-002-001	Soaker - No System	White	Left Drain	59 3/4” x 33” x 20” / 75 lb	28.6 ft^3	$ 1510
106668-000-002-002			Right Drain			$ 1510

MACKENZIE 6032 - 106669

SKU	System	Color	Configuration	Dimensions & Weight	Packaging	MSRP
106669-000-002-100	Soaker - No System	White	Left Drain	59 3/4” x 33” x 18” / 75 lb	28.6 ft^3	$ 1510
106669-000-002-101			Right Drain			$ 1510

COMMON OPTIONS

SKU	Description	MSRP
OPT20137-004	Cable-operated waste and overflow (16 in. to 22 in.) (included in product packaging when purchased) Available colors: White **(001)**, Bone **(004)**, Chrome **(084)** and Brushed Nickel **(105)**	$ 362
OPT20137-084		$ 362
OPT20137-105		$ 362
OPT20137-001		$ 362

ACCESSORIES

SKU	Description	MSRP
10004306-001	White foam cushion with 2 suction pads (sold separately) Available color: White **(001)**	$ 138
10022491-004	Cable-operated waste and overflow (16 in. to 22 in.) (sold separately) Available colors: White **(001)**, Bone **(004)**, Chrome **(084)** and Brushed Nickel **(105)**	$ 362

RECOMMENDED DOORS - VISIT OUR WEBSITE FOR A COMPLETE LIST OF RECOMMENDED DOORS

SKU	Product Name	Pag.
139398	Halo 56 ½-59 x 59 - 8mm	990
139351	Incognito 57 56-59 x 56 3/4 in. 6mm Tub Door	1007
139354	Incognito 57 56-59 x 56 3/4 in. 8mm Tub Door	1011
135330	Incognito 57 Shaker 56-59 x 56 3/4 in. 8mm Tub Door	1005
135695	Revelation Square 56-59 x 56 ¾-59 ¼ - 8mm	1022
135692	Revelation Square 56-59 x 56 ¾-58 ¼ - 6mm	1020
136692	Revelation Round 56-59 x 56 3/4-59 1/4	1017
136695	Revelation Round 56-59 x 56 ¾-59 ¼ - 8 mm	1018
135320	Uptown 56-59 x 58 in. 8 mm	1024
136270	Duel 56-59 x 55 1/2-59	1003
138760	Inverto 56-59 x 55 ½-59 - 8mm	1013
138485	Vela 56 ½-59 x 59 - 8mm	988

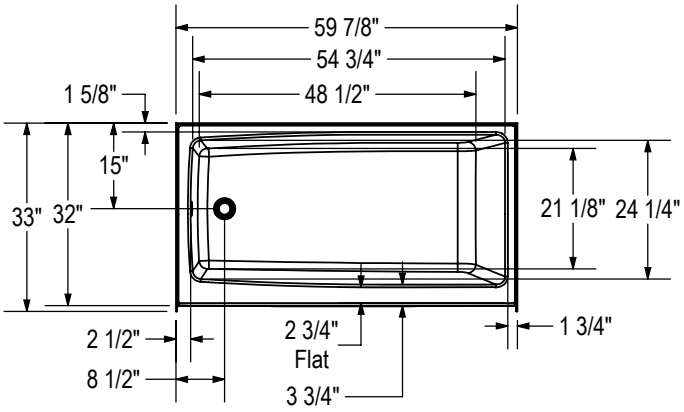

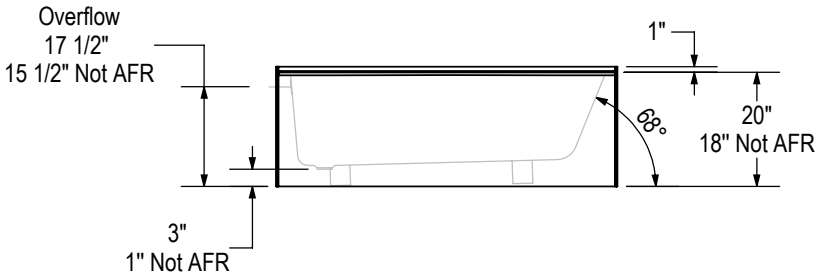

Wood support design may vary.

All dimensions are approximate. Structure measurements must be verified against the unit to ensure proper fit.

Go to Table of Contents

Mackenzie Corner 6030

Material : AcrylX

Features

- Seamless 1-piece corner style bathtub
- Modern minimalist design with a freestanding look
- Right or left-hand drain (drain is always on the wall side)
- Integrated flat skirt and tiling flange
- Textured bottom
- Available with or without Above-the-Floor Rough (AFR)

MACKENZIE 6030 - 106811

SKU	System	Color	Configuration	Dimensions & Weight	Packaging	MSRP
106811-000-002-001	Soaker - No System	White	Left Drain	59 7/8” x 30” x 18” / 70 lb	26.5 ft^3	$ 2408
106811-000-002-002			Right Drain			$ 2408

MACKENZIE 6030 AFR - 106812

SKU	System	Color	Configuration	Dimensions & Weight	Packaging	MSRP
106812-000-002-101	Soaker - No System	White	Left Drain	59 7/8” x 30” x 20” / 70 lb	26.5 ft^3	$ 2408
106812-000-002-102			Right Drain			$ 2408

COMMON OPTIONS

SKU	Description	MSRP
OPT20137-004	Cable-operated waste and overflow (16 in. to 22 in.) (included in product packaging when purchased) Available colors: White **(001)**, Bone **(004)**, Chrome **(084)** and Brushed Nickel **(105)**	$ 362
OPT20137-084		$ 362
OPT20137-105		$ 362
OPT20137-001		$ 362

ACCESSORIES

SKU	Description	MSRP
10004306-001	White foam cushion with 2 suction pads (sold separately) Available color: White **(001)**	$ 138
10022491-004	Cable-operated waste and overflow (16 in. to 22 in.) (sold separately) Available colors: White **(001)**, Bone **(004)**, Chrome **(084)** and Brushed Nickel **(105)**	$ 362

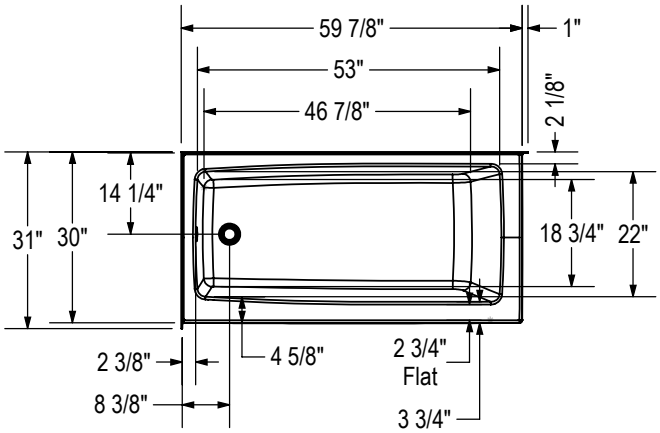

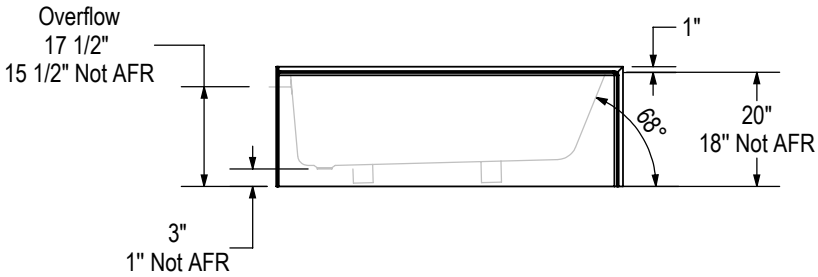

Wood support design may vary.

All dimensions are approximate. Structure measurements must be verified against the unit to ensure proper fit.

Go to Table of Contents

Mackenzie Corner 6032

Material : AcrylX

Features

- Seamless 1-piece corner style bathtub
- Modern minimalist design with a freestanding look
- Right or left-hand drain (drain is always on the wall side)
- Integrated flat skirt and tiling flange
- Textured bottom
- Available with or without Above-the-Floor Rough (AFR)

MACKENZIE 6032 - 106813

SKU	System	Color	Configuration	Dimensions & Weight	Packaging	MSRP
106813-000-002-001	Soaker - No System	White	Left Drain	59 7/8” x 32” x 18” / 75 lb	28.6 ft^3	$ 2496
106813-000-002-002			Right Drain			$ 2496

MACKENZIE 6032 AFR - 106814

SKU	System	Color	Configuration	Dimensions & Weight	Packaging	MSRP
106814-000-002-101	Soaker - No System	White	Left Drain	59 7/8” x 32” x 20” / 75 lb	28.6 ft^3	$ 2496
106814-000-002-102			Right Drain			$ 2496

COMMON OPTIONS

SKU	Description	MSRP
OPT20137-004	Cable-operated waste and overflow (16 in. to 22 in.) (included in product packaging when purchased) Available colors: White **(001)**, Bone **(004)**, Chrome **(084)** and Brushed Nickel **(105)**	$ 362
OPT20137-084		$ 362
OPT20137-105		$ 362
OPT20137-001		$ 362

ACCESSORIES

SKU	Description	MSRP
10004306-001	White foam cushion with 2 suction pads (sold separately) Available color: White **(001)**	$ 138
10022491-004	Cable-operated waste and overflow (16 in. to 22 in.) (sold separately) Available colors: White **(001)**, Bone **(004)**, Chrome **(084)** and Brushed Nickel **(105)**	$ 362

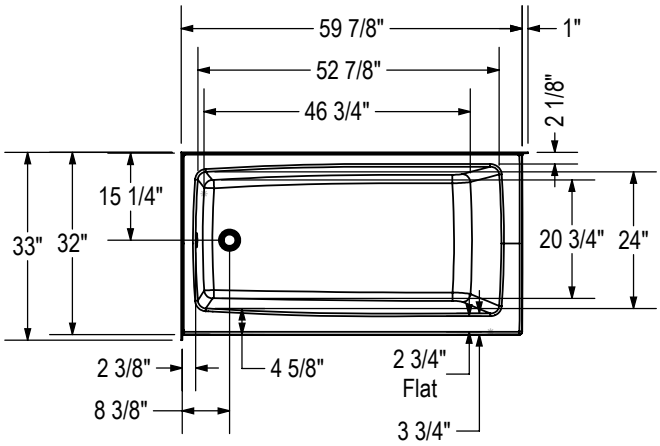

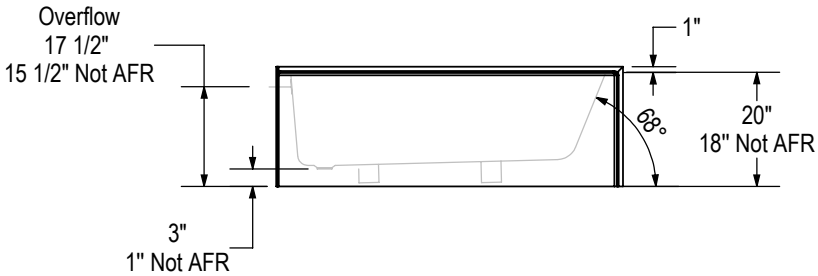

Wood support design may vary.

All dimensions are approximate. Structure measurements must be verified against the unit to ensure proper fit.

Go to Table of Contents

Mackenzie Corner Access 6030

Material : AcrylX

Features

- Seamless 1-piece corner style bathtub
- Modern minimalist design with a freestanding look
- Right or left-hand drain (drain is always on the wall side)
- Integrated flat skirt and tiling flange
- Textured bottom
- Available with or without Above-the-Floor Rough (AFR)

MACKENZIE ACCESS 6030 - 106815

SKU	System	Color	Configuration	Dimensions & Weight	Packaging	MSRP
106815-000-002-001	Soaker - No System	White	Left Drain	59 7/8” x 30” x 14” / 60 lb	21.5 ft^3	$ 2408
106815-000-002-002			Right Drain			$ 2408

MACKENZIE ACCESS 6030 AFR - 106816

SKU	System	Color	Configuration	Dimensions & Weight	Packaging	MSRP
106816-000-002-101	Soaker - No System	White	Left Drain	59 7/8” x 30” x 16” / 60 lb	21.5 ft^3	$ 2408
106816-000-002-102			Right Drain			$ 2408

COMMON OPTIONS

SKU	Description	MSRP
OPT20137-004	Cable-operated waste and overflow (16 in. to 22 in.) (included in product packaging when purchased) Available colors: White **(001)**, Bone **(004)**, Chrome **(084)** and Brushed Nickel **(105)**	$ 362
OPT20137-084		$ 362
OPT20137-105		$ 362
OPT20137-001		$ 362

ACCESSORIES

SKU	Description	MSRP
10004306-001	White foam cushion with 2 suction pads (sold separately) Available color: White **(001)**	$ 138
10022491-004	Cable-operated waste and overflow (16 in. to 22 in.) (sold separately) Available colors: White **(001)**, Bone **(004)**, Chrome **(084)** and Brushed Nickel **(105)**	$ 362

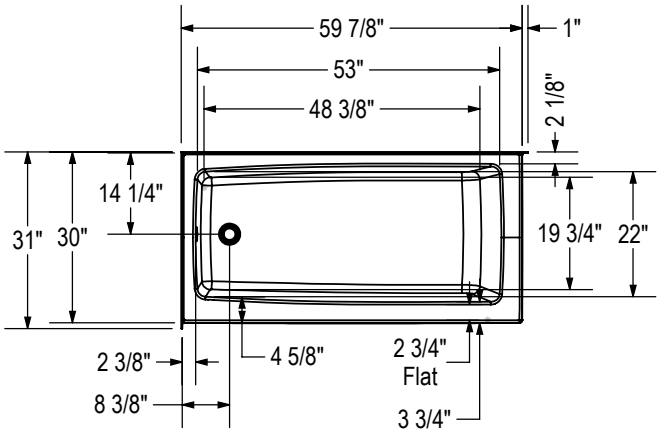

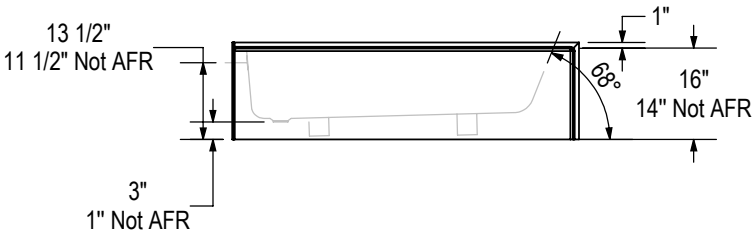

Wood support design may vary.

All dimensions are approximate. Structure measurements must be verified against the unit to ensure proper fit.

TOF-3060

Material : AcrylX

Features

- 1 1/2 in. wrap around backsplash
- Integrated apron and tiling flange
- Textured floor
- Right or left drain
- Alcove installation

TOF-3060 - 145008

SKU	System	Color	Configuration	Dimensions & Weight	Packaging	MSRP
145008-000-002-084	Soaker - No System	White	Left Drain	59 3/4” x 29 7/8” x 17 1/2” / 52 lb	28 ft³	$ 1155
145008-000-002-085			Right Drain			$ 1155

TOF-3060 AFR - 145009

SKU	System	Color	Configuration	Dimensions & Weight	Packaging	MSRP
145009-000-002-584	Soaker - No System	White	Left Drain	59 3/4” x 29 7/8” x 19 7/8” / 52 lb	28 ft³	$ 1155
145009-000-002-585			Right Drain			$ 1155

ACCESSORIES

SKU	Description	MSRP
10004306-001	White foam cushion with 2 suction pads (sold separately) Available color: White **(001)**	$ 138
10024636-002	Tile Adaptor (for door installation) Available colors: White **(002)**, Bone **(004)** and Biscuit **(007)**	$ 260
10024636-004		$ 260
10024636-007		$ 260
10022491-004	Cable-operated waste and overflow (16 in. to 22 in.) (sold separately) Available colors: White **(001)**, Bone **(004)**, Chrome **(084)** and Brushed Nickel **(105)**	$ 362

RECOMMENDED DOORS - VISIT OUR WEBSITE FOR A COMPLETE LIST OF RECOMMENDED DOORS

SKU	Product Name	Pag.
139398	Halo 56 ½-59 x 59 - 8mm	990
139351	Incognito 57 56-59 x 56 3/4 in. 6mm Tub Door	1007
139354	Incognito 57 56-59 x 56 3/4 in. 8mm Tub Door	1011
135330	Incognito 57 Shaker 56-59 x 56 3/4 in. 8mm Tub Door	1005
135695	Revelation Square 56-59 x 56 ¾-59 ¼ - 8mm	1022
135692	Revelation Square 56-59 x 56 ¾-58 ¼ - 6mm	1020
136692	Revelation Round 56-59 x 56 3/4-59 1/4	1017
136695	Revelation Round 56-59 x 56 ¾-59 ¼ - 8 mm	1018
135320	Uptown 56-59 x 58 in. 8 mm	1024
136270	Duel 56-59 x 55 1/2-59	1003
138760	Inverto 56-59 x 55 ½-59 - 8mm	1013
138485	Vela 56 ½-59 x 59 - 8mm	988
138480		986
134661	Kameleon SC 55-59 x 57 - 6mm	995
134573	Kameleon 55-59 x 57 - 8mm	997
134670	Kameleon SC 55-59 x 57 - 8mm	991

NO SYSTEM

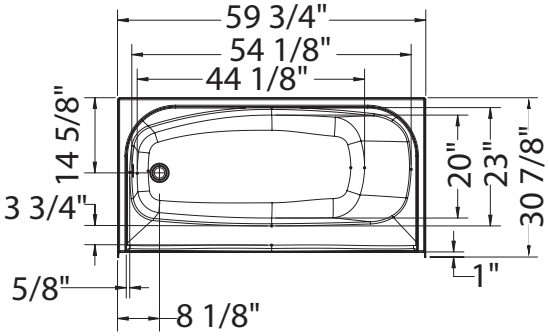

WHIRLPOOL WITH CHROMATHERAPY

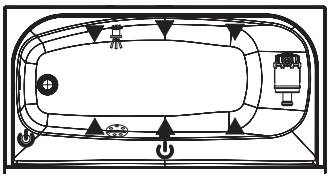

NOT ABOVE-THE-FLOOR

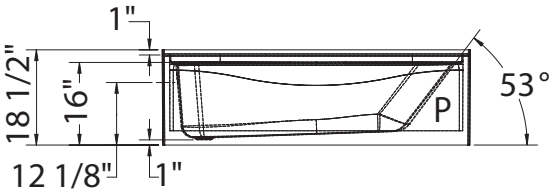

ABOVE-THE-FLOOR

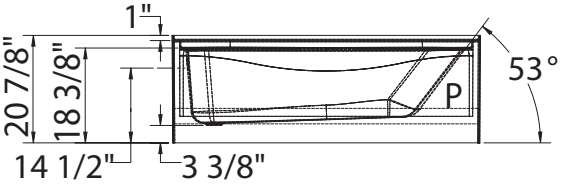

(▲) : Indicates Whirlpool jets positioning
(△) : Indicates suction positioning
( ) : Indicates chromatherapy light positioning

All dimensions are approximate. Structure measurements must be verified against the unit to ensure proper fit.

TOF-3260

Material : AcrylX

Features

- 3 in. wrap around backsplash
- Integrated apron and tiling flange
- Textured floor
- Right or left drain
- Alcove installation

TOF-3260 - 145014

SKU	System	Color	Configuration	Dimensions & Weight	Packaging	MSRP
145014-000-002-084	Soaker - No System	White	Left Drain	59 3/4” x 33” x 19 1/8” / 52 lb	28 ft³	$ 1267
145014-000-002-085			Right Drain			$ 1267

TOF-3260 AFR - 145015

SKU	System	Color	Configuration	Dimensions & Weight	Packaging	MSRP
145015-000-002-584	Soaker - No System	White	Left Drain	59 3/4” x 33” x 21 1/2” / 52 lb	28 ft³	$ 1267
145015-000-002-585			Right Drain			$ 1267

ACCESSORIES

SKU	Description	MSRP
10004306-001	White foam cushion with 2 suction pads (sold separately) Available color: White **(001)**	$ 138
10024636-002	Tile Adaptor (for door installation) Available colors: White **(002)**, Bone **(004)** and Biscuit **(007)**	$ 260
10024636-004		$ 260
10024636-007		$ 260
10022491-004	Cable-operated waste and overflow (16 in. to 22 in.) (sold separately) Available colors: White **(001)**, Bone **(004)**, Chrome **(084)** and Brushed Nickel **(105)**	$ 362

RECOMMENDED DOORS - VISIT OUR WEBSITE FOR A COMPLETE LIST OF RECOMMENDED DOORS

SKU	Product Name	Pag.
139398	Halo 56 ½-59 x 59 - 8mm	990
139351	Incognito 57 56-59 x 56 3/4 in. 6mm Tub Door	1007
139354	Incognito 57 56-59 x 56 3/4 in. 8mm Tub Door	1011
135330	Incognito 57 Shaker 56-59 x 56 3/4 in. 8mm Tub Door	1005
135695	Revelation Square 56-59 x 56 ¾-59 ¼ - 8mm	1022
135692	Revelation Square 56-59 x 56 ¾-58 ¼ - 6mm	1020
136692	Revelation Round 56-59 x 56 3/4-59 1/4	1017
136695	Revelation Round 56-59 x 56 ¾-59 ¼ - 8 mm	1018
135320	Uptown 56-59 x 58 in. 8 mm	1024
136270	Duel 56-59 x 55 1/2-59	1003
138760	Inverto 56-59 x 55 ½-59 - 8mm	1013
138485	Vela 56 ½-59 x 59 - 8mm	988
138480		986
134661	Kameleon SC 55-59 x 57 - 6mm	995
134573	Kameleon 55-59 x 57 - 8mm	997
134670	Kameleon SC 55-59 x 57 - 8mm	991

NO SYSTEM

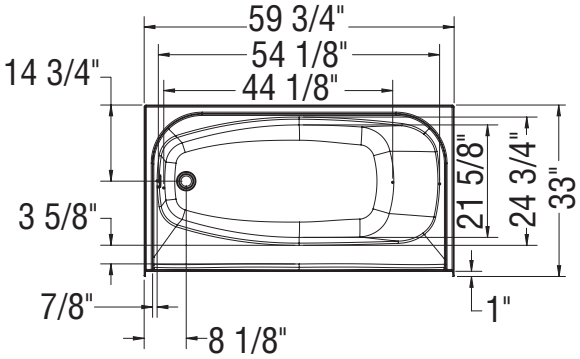

NOT ABOVE-THE-FLOOR

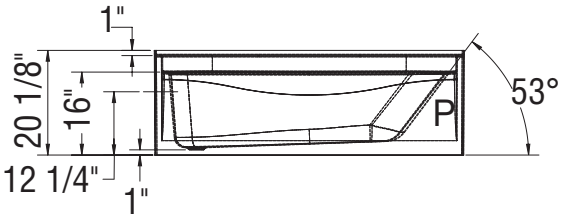

ABOVE-THE-FLOOR

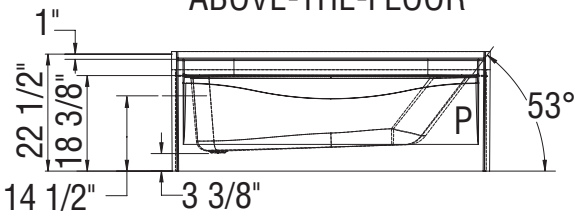

All dimensions are approximate. Structure measurements must be verified against the unit to ensure proper fit.

Aigo

Material : Acrylic

Features

- Oval inspired lines with an urban touch and comfortable design
- Comfortable inclined backrests and maximized bathing well
- Drop-in and undermount [10] installation with end drain
- Cut-out template included

AIGO - 102788

SKU	System	Color	Configuration	Dimensions & Weight	Packaging	MSRP
102788-000-001	Soaker - No System	White	End Drain	72” x 36” x 23 1/2” / 71 lb	44 ft³	$ 2336
102788-054-001-100	Hydrofeel [1 4]					$ 6571
102788-055-001	Aerofeel [1 5]					$ 6680
102788-056-001	Combined Hydrofeel & Aerofeel [1 4 5]					$ 10051

COMMON OPTIONS

SKU	Description	MSRP
OPT10054	Two chromatherapy lights for bathtubs without waterfall (factory installed)	$ 1010
OPT10095	Water heater assembly for whirlpool and combined systems (factory installed)	$ 1033
OPT20139	Ozonator for whirlpool system (factory installed)	$ 670
OPT10118-084	ABS trim kit for whirlpool and combined systems (factory installed) Available colors: Chrome **(084)** and Brushed Nickel **(105)**	$ 287
OPT10118-105		$ 287
OPT10119-105	Metal trim kit for Aerofeel electronic control (factory installed) Available colors: Chrome **(084)** and Brushed Nickel **(105)**	$ 107
OPT10119-084		$ 107
OPT20205	Lite option 3/8 in. thin deck [6] When chosen, this option is offered at no cost	$ 0

ACCESSORIES

SKU	Description	MSRP
10033272	Flexible main hose for electronic control air massage - kit (sold separately) 15 ft. extension	$ 407
10025081-084	Waste and overflow 27 in. flexible neck (sold separately) Available colors: Chrome **(084)** and Brushed Nickel **(105)**	$ 489
10025081-105		$ 489

FOOTNOTES

No	Description
1	Components for standard colour units equipped with systems are colour-coordinated. Trim kit and/or air push with metallic finish can be added (additional charge applies). For non-standard colour units, please specify trim kit and/or air push colour (additional charge applies for metallic finishes). Please note that the positioning of the system’s control could be in conflict with the door if one was installed on the unit. To insure compatibility, please contact customer service.
4	For details on pump position and requirements, see technical drawings on https://www.maax.com. When there is a pump position A or B indicated on the technical drawing, please specify position when ordering.
5	For details on blower position and requirements, see technical drawings on https://www.maax.com. When there is a blower position A or B indicated on the technical drawing, please specify position when ordering.
6	Specify 3/8 (Lite option) or 2 in. on deck height. If ordering unit with an apron, only 2 in. deck height is available.
10	Systems not available with units installed undermount.

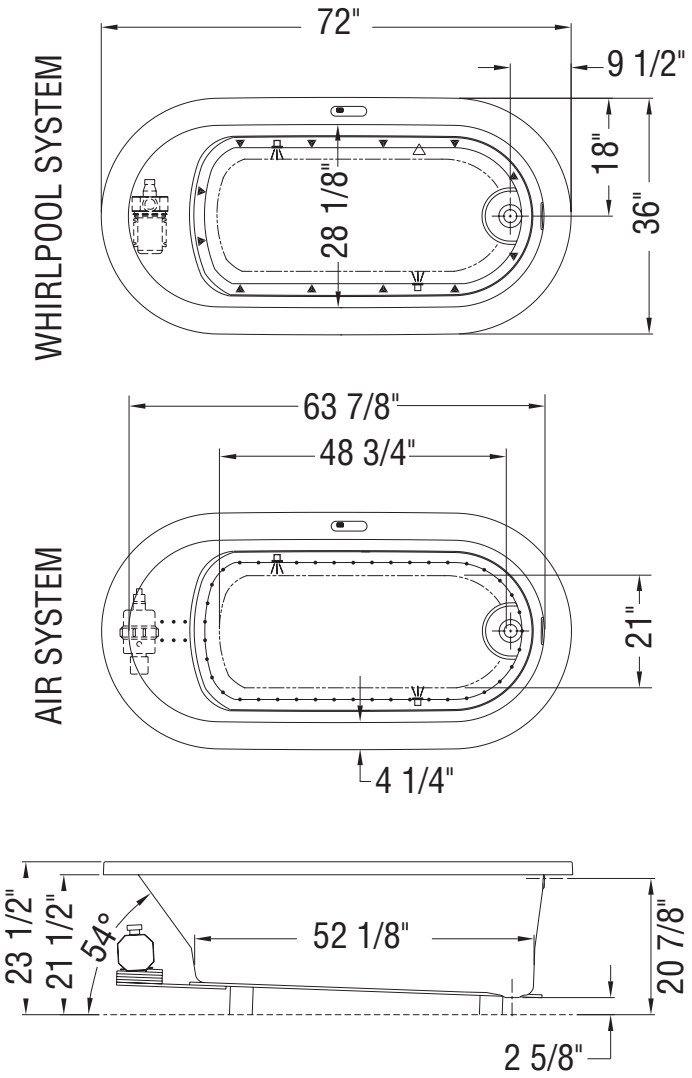

Note: Air backjets on same side as blower
(▲) : Indicates whirlpool jets positioning
(△) : Indicates suction positioning
(•) : Indicates airjets positioning
( ) : Indicates chromatherapy light positioning
Bathtub base includes anti-vibration Neutra-Phone leg supports (not shown).
All dimensions are approximate. Structure measurements must be verified against the unit to ensure proper fit.

Calla 6642

Material : Acrylic

Features

- Classic oval design with sleekly sculpted contour and backrest
- Relaxing armrests with ergonomic backrests
- Ample deck space for faucet installation
- Drop-in installation with center drain
- Cut-out template included
- White cushion included with Hydromax and Combined systems
- Metal or acrylic grab bar is optional. Factory installed, only one positioning is possible (see technical drawing)

CALLA 6642 - 100075

SKU	System	Color	Configuration	Dimensions & Weight	Packaging	MSRP
100075-000-001-000	Soaker - No System	White	Center Drain	65 3/4" x 41 1/2" x 23 7/8" / 92 lb	38 ft^3	$ 2193
100075-004-001-000	Hydromax [1 4 17]					$ 6537
100075-055-001-100	Aerofeel [1 5]					$ 6537
100075-094-001-100	Combined Hydromax & Aerofeel [1 4 5 17]					$ 10009

COMMON OPTIONS

SKU	Description	MSRP
OPT20141	Rest for Hydromax and combined systems [12]	$ 1173
OPT10054	Two chromatherapy lights for bathtubs without waterfall (factory installed)	$ 1010
OPT10095	Water heater assembly for whirlpool and combined systems (factory installed)	$ 1033
OPT20139	Ozonator for whirlpool system (factory installed)	$ 670
OPT10106-084	Metal trim kit for whirlpool and combined systems (factory installed) Available colors: Chrome **(084)** and Brushed Nickel **(105)**	$ 728
OPT10106-105		$ 728
OPT10113-007	6-in. acrylic grab bar (factory installed) [7] Available colors: White **(001)**, Bone **(004)**, Biscuit **(007)**, Chrome **(084)** and Brushed Nickel **(105)**	$ 398
OPT10113-004		$ 398
OPT10113-001		$ 398
OPT10113-084		$ 398
OPT10113-105		$ 398
OPT10119-105	Metal trim kit for Aerofeel electronic control (factory installed) Available colors: Chrome **(084)** and Brushed Nickel **(105)**	$ 107
OPT10119-084		$ 107

ACCESSORIES

SKU	Description	MSRP
10033272	Flexible main hose for electronic control air massage - kit (sold separately) 15 ft. extension	$ 407
10004306-001	White foam cushion with 2 suction pads (sold separately) Available color: White **(001)**	$ 138
10025081-084	Waste and overflow 27 in. flexible neck (sold separately) Available colors: Chrome **(084)** and Brushed Nickel **(105)**	$ 489
10025081-105		$ 489

FOOTNOTES

No	Description
1	Components for standard colour units equipped with systems are colour-coordinated. Trim kit and/or air push with metallic finish can be added (additional charge applies). For non-standard colour units, please specify trim kit and/or air push colour (additional charge applies for metallic finishes). Please note that the positioning of the system's control could be in conflict with the door if one was installed on the unit. To insure compatibility, please contact customer service.
4	For details on pump position and requirements, see technical drawings on https://www.maax.com. When there is a pump position A or B indicated on the technical drawing, please specify position when ordering.

FOOTNOTES

No	Description
5	For details on blower position and requirements, see technical drawings on https://www.maax.com. When there is a blower position A or B indicated on the technical drawing, please specify position when ordering.
7	One 6 in. metal or acrylic grab bar is optional. Factory installed, only one positioning is possible (see technical drawings on https://www.maax.com).
12	In combined systems, only the pump is replaced with the Rest. The blower remains the same.
17	Includes Backmax and Footmax jets. Souvenir with apron and Living bathtub models do not include Footmax jets.

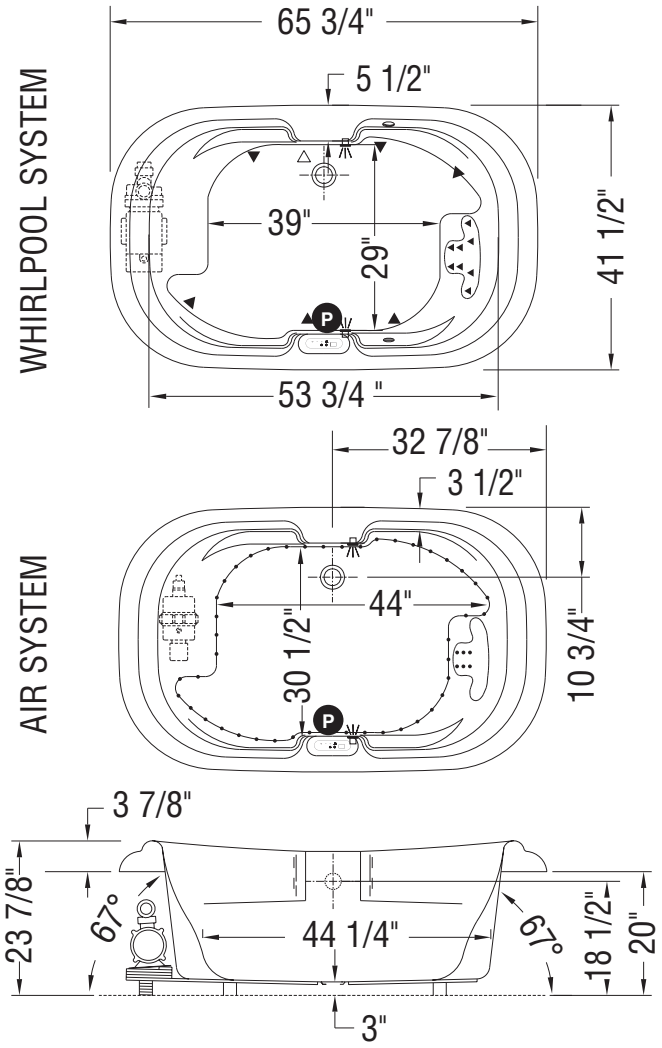

(Ⓟ) : Indicates optional grab bar positioning
(▲) : Indicates whirlpool jets positioning
(△) : Indicates suction positioning
(•) : Indicates airjets positioning
( ) : Indicates chromatherapy light positioning
Bathtub base includes anti-vibration Neutra-Phone leg supports (not shown).
All dimensions are approximate. Structure measurements must be verified against the unit to ensure proper fit.

Go to Table of Contents

Eterne 7236

Material : Acrylic

Features

- Contemporary rectangular bathtub
- Deep bathing well for ultimate relaxation
- Comfortable backrest and ample deck space for faucet installation
- Relaxing armrests
- Drop-in installation with center drain

ETERNE 7236 - 101317

SKU	System	Color	Configuration	Dimensions & Weight	Packaging	MSRP
101317-000-001-100	Soaker - No System	White	Center Drain	72” x 36” x 23 1/2” / 107 lb	42 ft³	$ 2808
101317-004-001	Hydromax [1 4 17]					$ 7152
101317-055-001	Aerofeel [1 5]					$ 7152
101317-094-001	Combined Hydromax & Aerofeel [1 4 5 17]					$ 10624

COMMON OPTIONS

SKU	Description	MSRP
OPT20141	Rest for Hydromax and combined systems [12]	$ 1173
OPT10054	Two chromatherapy lights for bathtubs without waterfall (factory installed)	$ 1010
OPT10095	Water heater assembly for whirlpool and combined systems (factory installed)	$ 1033
OPT20139	Ozonator for whirlpool system (factory installed)	$ 670
OPT10106-084	Metal trim kit for whirlpool and combined systems (factory installed) Available colors: Chrome **(084)** and Brushed Nickel **(105)**	$ 728
OPT10106-105		$ 728
OPT10119-105	Metal trim kit for Aerofeel electronic control (factory installed) Available colors: Chrome **(084)** and Brushed Nickel **(105)**	$ 107
OPT10119-084		$ 107
OPT10260-084	Two 6-in. acrylic grab bars (factory installed) [8] Available colors: White **(001)**, Bone **(004)**, Biscuit **(007)**, Chrome **(084)** and Brushed Nickel **(105)**	$ 392
OPT10260-007		$ 392
OPT10260-004		$ 392
OPT10260-105		$ 392
OPT10260-001		$ 392

ACCESSORIES

SKU	Description	MSRP
10033272	Flexible main hose for electronic control air massage - kit (sold separately) 15 ft. extension	$ 407
10004306-001	White foam cushion with 2 suction pads (sold separately) Available color: White **(001)**	$ 138
10025081-084	Waste and overflow 27 in. flexible neck (sold separately) Available colors: Chrome **(084)** and Brushed Nickel **(105)**	$ 489
10025081-105		$ 489

FOOTNOTES

No	Description
1	Components for standard colour units equipped with systems are colour-coordinated. Trim kit and/or air push with metallic finish can be added (additional charge applies). For non-standard colour units, please specify trim kit and/or air push colour (additional charge applies for metallic finishes). Please note that the positioning of the system’s control could be in conflict with the door if one was installed on the unit. To insure compatibility, please contact customer service.
4	For details on pump position and requirements, see technical drawings on https://www.maax.com. When there is a pump position A or B indicated on the technical drawing, please specify position when ordering.

FOOTNOTES

No	Description
5	For details on blower position and requirements, see technical drawings on https://www.maax.com. When there is a blower position A or B indicated on the technical drawing, please specify position when ordering.
8	Two 6 in. or 12 in. metal or acrylic grab bars are optional. Factory installed, only one positioning is possible (see technical drawings on https://www.maax.com).
12	In combined systems, only the pump is replaced with the Rest. The blower remains the same.
17	Includes Backmax and Footmax jets. Souvenir with apron and Living bathtub models do not include Footmax jets.

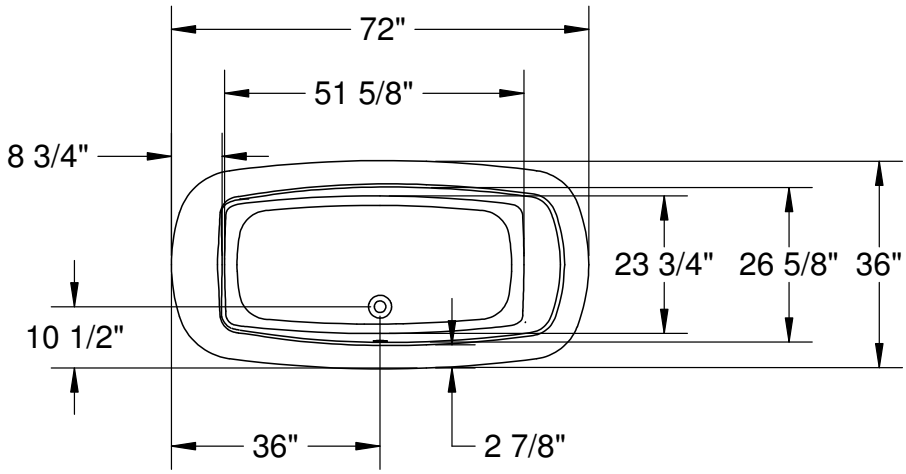

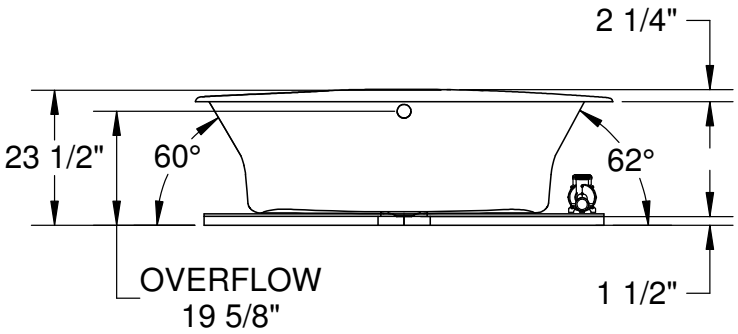

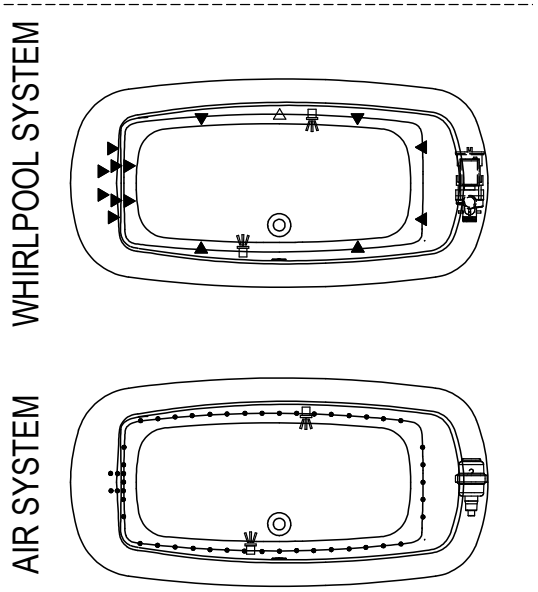

Blower and/or pump location is indicated on the technical drawing.

All dimensions are approximate.
Structure measurement must be verified against the unit to ensure proper fit.

(▲) : Indicates whirlpool jets positioning
(●) : Indicates Aerofeel airjets positioning
(△) : Indicates suction positioning
( ) : Indicates chromatherapy light positioning

Go to Table of Contents

Eterne 7242

Material : Acrylic

Features

- Contemporary rectangular bathtub
- Deep bathing well for ultimate relaxation
- Comfortable backrest and ample deck space for faucet installation
- Relaxing armrests
- Drop-in installation with center drain

ETERNE 7242 - 101318

SKU	System	Color	Configuration	Dimensions & Weight	Packaging	MSRP
101318-000-001-100	Soaker - No System	White	Center Drain	72” x 41 3/4” x 23 1/2” / 113 lb	47 ft^3	$ 2975
101318-004-001	Hydromax [1 4 17]					$ 7319
101318-055-001	Aerofeel [1 5]					$ 7319
101318-094-001	Combined Hydromax & Aerofeel [1 4 5 17]					$ 10791

COMMON OPTIONS

SKU	Description	MSRP
OPT20141	Rest for Hydromax and combined systems [12]	$ 1173
OPT10054	Two chromatherapy lights for bathtubs without waterfall (factory installed)	$ 1010
OPT10095	Water heater assembly for whirlpool and combined systems (factory installed)	$ 1033
OPT20139	Ozonator for whirlpool system (factory installed)	$ 670
OPT10106-084	Metal trim kit for whirlpool and combined systems (factory installed) Available colors: Chrome **(084)** and Brushed Nickel **(105)**	$ 728
OPT10106-105		$ 728
OPT10119-105	Metal trim kit for Aerofeel electronic control (factory installed) Available colors: Chrome **(084)** and Brushed Nickel **(105)**	$ 107
OPT10119-084		$ 107
OPT10260-084	Two 6-in. acrylic grab bars (factory installed) [8] Available colors: White **(001)**, Bone **(004)**, Biscuit **(007)**, Chrome **(084)** and Brushed Nickel **(105)**	$ 392
OPT10260-007		$ 392
OPT10260-004		$ 392
OPT10260-105		$ 392
OPT10260-001		$ 392

ACCESSORIES

SKU	Description	MSRP
10033272	Flexible main hose for electronic control air massage - kit (sold separately) 15 ft. extension	$ 407
10004306-001	White foam cushion with 2 suction pads (sold separately) Available color: White **(001)**	$ 138
10025081-084	Waste and overflow 27 in. flexible neck (sold separately) Available colors: Chrome **(084)** and Brushed Nickel **(105)**	$ 489
10025081-105		$ 489

FOOTNOTES

No	Description
1	Components for standard colour units equipped with systems are colour-coordinated. Trim kit and/or air push with metallic finish can be added (additional charge applies). For non-standard colour units, please specify trim kit and/or air push colour (additional charge applies for metallic finishes). Please note that the positioning of the system’s control could be in conflict with the door if one was installed on the unit. To insure compatibility, please contact customer service.
4	For details on pump position and requirements, see technical drawings on https://www.maax.com. When there is a pump position A or B indicated on the technical drawing, please specify position when ordering.

FOOTNOTES

No	Description
5	For details on blower position and requirements, see technical drawings on https://www.maax.com. When there is a blower position A or B indicated on the technical drawing, please specify position when ordering.
8	Two 6 in. or 12 in. metal or acrylic grab bars are optional. Factory installed, only one positioning is possible (see technical drawings on https://www.maax.com).
12	In combined systems, only the pump is replaced with the Rest. The blower remains the same.
17	Includes Backmax and Footmax jets. Souvenir with apron and Living bathtub models do not include Footmax jets.

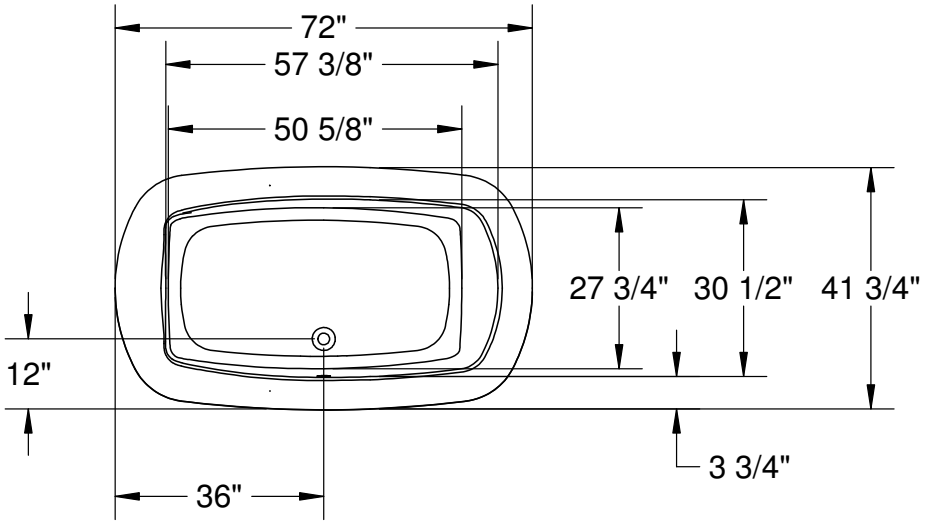

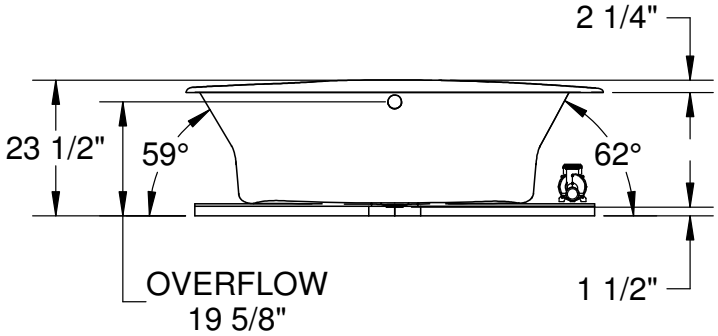

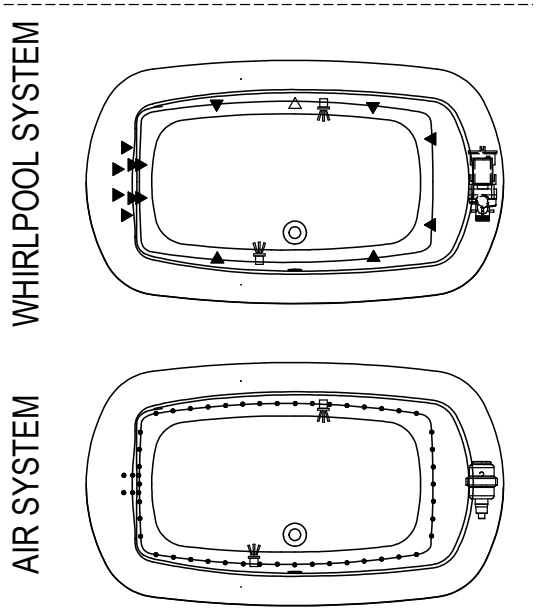

Blower and/or pump location is indicated on the technical drawing.

All dimensions are approximate.
Structure measurement must be verified against the unit to ensure proper fit.

(▲) : Indicates whirlpool jets positioning
(●) : Indicates Aerofeel airjets positioning
(△) : Indicates suction positioning
( ) : Indicates chromatherapy light positioning

Go to Table of Contents

Jazz (Drop-in)

Material : Acrylic

Features

- Deep soak bathing for ultimate relaxation
- Comfortable, ergonomic design with relaxing armrests
- Drop-in installation with center drain
- MAAX innovative leveling legs for easy installation

JAZZ (DROP-IN) - 105509

SKU	System	Color	Configuration	Dimensions & Weight	Packaging	MSRP
105509-000-001-105	Soaker - No System	White	Center Drain	66” x 36” x 24” / 100 lb	37 ft^3	$ 1874
105509-055-001-104	Aerofeel [1] [5]					$ 6218

COMMON OPTIONS

SKU	Description	MSRP
OPT10054	Two chromatherapy lights for bathtubs without waterfall (factory installed)	$ 1010
OPT10119-105	Metal trim kit for Aerofeel electronic control (factory installed) Available colors: Chrome **(084)** and Brushed Nickel **(105)**	$ 107
OPT10119-084		$ 107

ACCESSORIES

SKU	Description	MSRP
10033272	Flexible main hose for electronic control air massage - kit (sold separately) 15 ft. extension	$ 407
10004306-001	White foam cushion with 2 suction pads (sold separately) Available color: White **(001)**	$ 138

FOOTNOTES

No	Description
1	Components for standard colour units equipped with systems are colour-coordinated. Trim kit and/or air push with metallic finish can be added (additional charge applies). For non-standard colour units, please specify trim kit and/or air push colour (additional charge applies for metallic finishes). Please note that the positioning of the system’s control could be in conflict with the door if one was installed on the unit. To insure compatibility, please contact customer service.
5	For details on blower position and requirements, see technical drawings on https://www.maax.com. When there is a blower position A or B indicated on the technical drawing, please specify position when ordering.

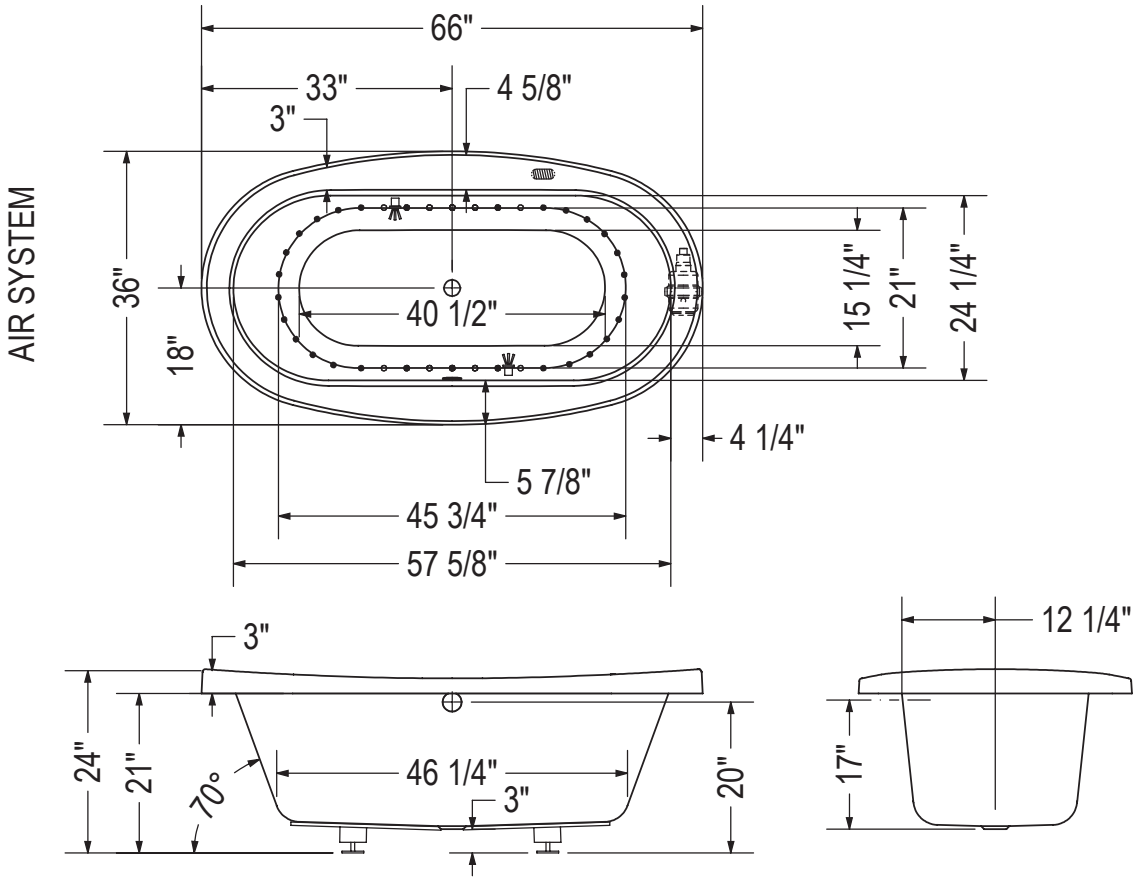

(●) : Indicates airjets positioning
( ) : Indicates chromatherapy light positioning

All dimensions are approximate. Structure measurements must be verified against the unit to ensure proper fit.

Go to Table of Contents

Living 6042

Material : Acrylic

Features

- Spacious bathtub with ergonomic design
- Comfortable backrest and ample deck space for faucet installation
- Inclined armrests with 1 angled 12 in. grab bar included [14]
- Drop-in installation with center drain
- Cut-out template included
- White cushion included with Hydromax and Combined systems
- Apron not available

LIVING 6042 - 102863

SKU	System	Color	Configuration	Dimensions & Weight	Packaging	MSRP
102863-000-001-000	Soaker - No System	White	Center Drain	60” x 41 3/4” x 23 3/8” / 72 lb	35 ft³	$ 1922
102863-004-001-100	Hydromax [1 4 17]					$ 6266
102863-055-001	Aerofeel [1 5]					$ 6266
102863-094-001	Combined Hydromax & Aerofeel [1 4 5 17]					$ 9738

COMMON OPTIONS

SKU	Description	MSRP
OPT10119-105	Metal trim kit for Aerofeel electronic control (factory installed) Available colors: Chrome **(084)** and Brushed Nickel **(105)**	$ 107
OPT10119-084		$ 107
OPT20141	Rest for Hydromax and combined systems [12]	$ 1173
OPT10054	Two chromatherapy lights for bathtubs without waterfall (factory installed)	$ 1010
OPT10095	Water heater assembly for whirlpool and combined systems (factory installed)	$ 1033
OPT20139	Ozonator for whirlpool system (factory installed)	$ 670
OPT10106-084	Metal trim kit for whirlpool and combined systems (factory installed) Available colors: Chrome **(084)** and Brushed Nickel **(105)**	$ 728
OPT10106-105		$ 728
OPT10109-084	Metallic finish grab bar replacing Acrylic grab bar Available colors: Chrome **(084)** and Brushed Nickel **(105)**	$ 345
OPT10109-105		$ 345

ACCESSORIES

SKU	Description	MSRP
10033272	Flexible main hose for electronic control air massage - kit (sold separately) 15 ft. extension	$ 407
10004306-001	White foam cushion with 2 suction pads (sold separately) Available color: White **(001)**	$ 138
10025081-084	Waste and overflow 27 in. flexible neck (sold separately) Available colors: Chrome **(084)** and Brushed Nickel **(105)**	$ 489
10025081-105		$ 489

FOOTNOTES

No	Description
1	Components for standard colour units equipped with systems are colour-coordinated. Trim kit and/or air push with metallic finish can be added (additional charge applies). For non-standard colour units, please specify trim kit and/or air push colour (additional charge applies for metallic finishes). Please note that the positioning of the system’s control could be in conflict with the door if one was installed on the unit. To insure compatibility, please contact customer service.
4	For details on pump position and requirements, see technical drawings on https://www.maax.com. When there is a pump position A or B indicated on the technical drawing, please specify position when ordering.
5	For details on blower position and requirements, see technical drawings on https://www.maax.com. When there is a blower position A or B indicated on the technical drawing, please specify position when ordering.
12	In combined systems, only the pump is replaced with the Rest. The blower remains the same.
14	Standard grab bars for standard colour units are colour-coordinated. Grab bars with metallic finish can be added (additional charge applies).

FOOTNOTES

No	Description
17	Includes Backmax and Footmax jets. Souvenir with apron and Living bathtub models do not include Footmax jets.

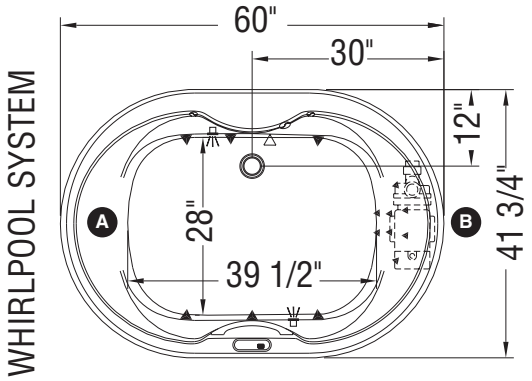

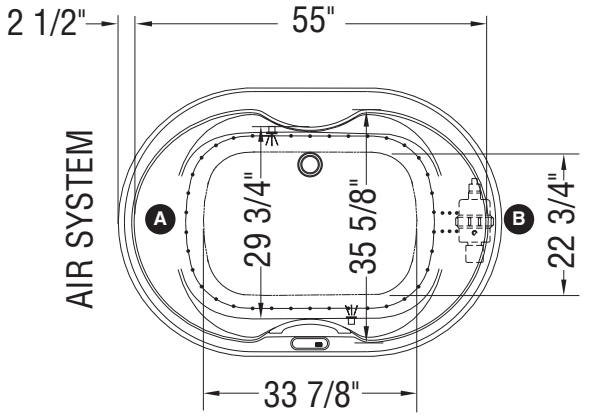

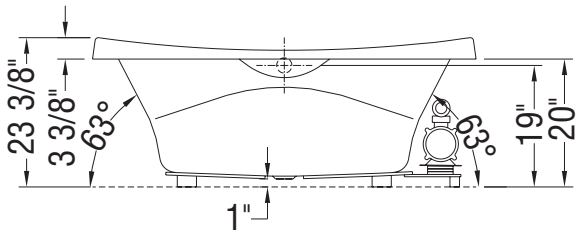

Note: Air / whirlpool backjets on same side as blower / pump

(▲) : Indicates whirlpool jets positioning
(△) : Indicates suction positioning
(•) : Indicates airjets positioning
( ) : Indicates chromatherapy light positioning

Ⓐ : Specify blower and/or pump location when ordering
Ⓑ
( ) : Indicates standard grab bar positioning

Bathtub base includes anti-vibration Neutra-Phone leg supports (not shown).

All dimensions are approximate. Structure measurements must be verified against the unit to ensure proper fit.

Go to Table of Contents

Living 6636

Material : Acrylic

Features

- Spacious bathtub with ergonomic design
- Comfortable backrest and ample deck space for faucet installation
- Inclined armrests with 1 angled 12 in. grab bar included [14]
- Drop-in installation with center drain
- Cut-out template included
- White cushion included with Hydromax and Combined systems
- Apron not available

LIVING 6636 - 102761

SKU	System	Color	Configuration	Dimensions & Weight	Packaging	MSRP
102761-000-001-000	Soaker - No System	White	Center Drain	66” x 36” x 23 3/8” / 82 lb	39 ft^3	$ 1874
102761-004-001-100	Hydromax [1 4 17]					$ 6218
102761-055-001-100	Aerofeel [1 5]					$ 6218
102761-094-001-100	Combined Hydromax & Aerofeel [1 4 5 17]					$ 9690

COMMON OPTIONS

SKU	Description	MSRP
OPT10119-105	Metal trim kit for Aerofeel electronic control (factory installed) Available colors: Chrome **(084)** and Brushed Nickel **(105)**	$ 107
OPT10119-084		$ 107
OPT20141	Rest for Hydromax and combined systems [12]	$ 1173
OPT10054	Two chromatherapy lights for bathtubs without waterfall (factory installed)	$ 1010
OPT10095	Water heater assembly for whirlpool and combined systems (factory installed)	$ 1033
OPT20139	Ozonator for whirlpool system (factory installed)	$ 670
OPT10106-084	Metal trim kit for whirlpool and combined systems (factory installed) Available colors: Chrome **(084)** and Brushed Nickel **(105)**	$ 728
OPT10106-105		$ 728
OPT10109-084	Metallic finish grab bar replacing Acrylic grab bar Available colors: Chrome **(084)** and Brushed Nickel **(105)**	$ 345
OPT10109-105		$ 345

ACCESSORIES

SKU	Description	MSRP
10033272	Flexible main hose for electronic control air massage - kit (sold separately) 15 ft. extension	$ 407
10004306-001	White foam cushion with 2 suction pads (sold separately) Available color: White **(001)**	$ 138
10025081-084	Waste and overflow 27 in. flexible neck (sold separately) Available colors: Chrome **(084)** and Brushed Nickel **(105)**	$ 489
10025081-105		$ 489

FOOTNOTES

No	Description
1	Components for standard colour units equipped with systems are colour-coordinated. Trim kit and/or air push with metallic finish can be added (additional charge applies). For non-standard colour units, please specify trim kit and/or air push colour (additional charge applies for metallic finishes). Please note that the positioning of the system’s control could be in conflict with the door if one was installed on the unit. To insure compatibility, please contact customer service.
4	For details on pump position and requirements, see technical drawings on https://www.maax.com. When there is a pump position A or B indicated on the technical drawing, please specify position when ordering.
5	For details on blower position and requirements, see technical drawings on https://www.maax.com. When there is a blower position A or B indicated on the technical drawing, please specify position when ordering.
12	In combined systems, only the pump is replaced with the Rest. The blower remains the same.
14	Standard grab bars for standard colour units are colour-coordinated. Grab bars with metallic finish can be added (additional charge applies).

FOOTNOTES

No	Description
17	Includes Backmax and Footmax jets. Souvenir with apron and Living bathtub models do not include Footmax jets.

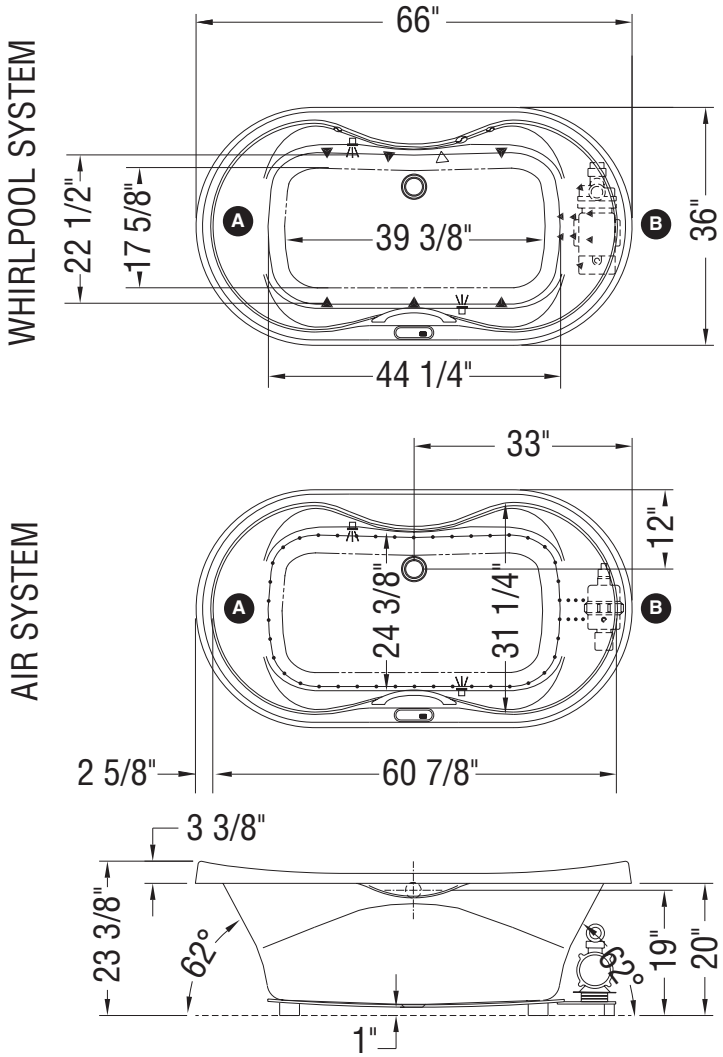

Note: Air / whirlpool backjets on same the side as blower / pump

(▲) : Indicates whirlpool jets positioning
(△) : Indicates suction positioning
(•) : Indicates airjets positioning
( ) : Indicates chromatherapy light positioning

Ⓐ : Specify blower and/or pump location when ordering
Ⓑ
( ) : Indicates standard grab bar positioning

Bathtub base includes anti-vibration Neutra-Phone leg supports (not shown).

All dimensions are approximate. Structure measurements must be verified against the unit to ensure proper fit.

Go to Table of Contents

Living 6642

Material : Acrylic

Features

- Spacious bathtub with ergonomic design
- Comfortable backrest and ample deck space for faucet installation
- Inclined armrests with 1 angled 12 in. grab bar included [14]
- Drop-in installation with center drain
- Cut-out template included
- White cushion included with Hydromax and Combined systems
- Apron not available

LIVING 6642 - 102865

SKU	System	Color	Configuration	Dimensions & Weight	Packaging	MSRP
102865-000-001-000	Soaker - No System	White	Center Drain	66” x 41 3/4” x 23 3/8” / 92 lb	38 ft³	$ 2041
102865-004-001-100	Hydromax [1 4 17]					$ 6385
102865-055-001	Aerofeel [1 5]					$ 6385
102865-094-001	Combined Hydromax & Aerofeel [1 4 5 17]					$ 9857

COMMON OPTIONS

SKU	Description	MSRP
OPT10119-105	Metal trim kit for Aerofeel electronic control (factory installed) Available colors: Chrome **(084)** and Brushed Nickel **(105)**	$ 107
OPT10119-084		$ 107
OPT20141	Rest for Hydromax and combined systems [12]	$ 1173
OPT10054	Two chromatherapy lights for bathtubs without waterfall (factory installed)	$ 1010
OPT10095	Water heater assembly for whirlpool and combined systems (factory installed)	$ 1033
OPT20139	Ozonator for whirlpool system (factory installed)	$ 670
OPT10106-084	Metal trim kit for whirlpool and combined systems (factory installed) Available colors: Chrome **(084)** and Brushed Nickel **(105)**	$ 728
OPT10106-105		$ 728
OPT10109-084	Metallic finish grab bar replacing Acrylic grab bar Available colors: Chrome **(084)** and Brushed Nickel **(105)**	$ 345
OPT10109-105		$ 345

ACCESSORIES

SKU	Description	MSRP
10033272	Flexible main hose for electronic control air massage - kit (sold separately) 15 ft. extension	$ 407
10004306-001	White foam cushion with 2 suction pads (sold separately) Available color: White **(001)**	$ 138
10025081-084	Waste and overflow 27 in. flexible neck (sold separately) Available colors: Chrome **(084)** and Brushed Nickel **(105)**	$ 489
10025081-105		$ 489

FOOTNOTES

No	Description
1	Components for standard colour units equipped with systems are colour-coordinated. Trim kit and/or air push with metallic finish can be added (additional charge applies). For non-standard colour units, please specify trim kit and/or air push colour (additional charge applies for metallic finishes). Please note that the positioning of the system’s control could be in conflict with the door if one was installed on the unit. To insure compatibility, please contact customer service.
4	For details on pump position and requirements, see technical drawings on https://www.maax.com. When there is a pump position A or B indicated on the technical drawing, please specify position when ordering.
5	For details on blower position and requirements, see technical drawings on https://www.maax.com. When there is a blower position A or B indicated on the technical drawing, please specify position when ordering.
12	In combined systems, only the pump is replaced with the Rest. The blower remains the same.
14	Standard grab bars for standard colour units are colour-coordinated. Grab bars with metallic finish can be added (additional charge applies).

FOOTNOTES

No	Description
17	Includes Backmax and Footmax jets. Souvenir with apron and Living bathtub models do not include Footmax jets.

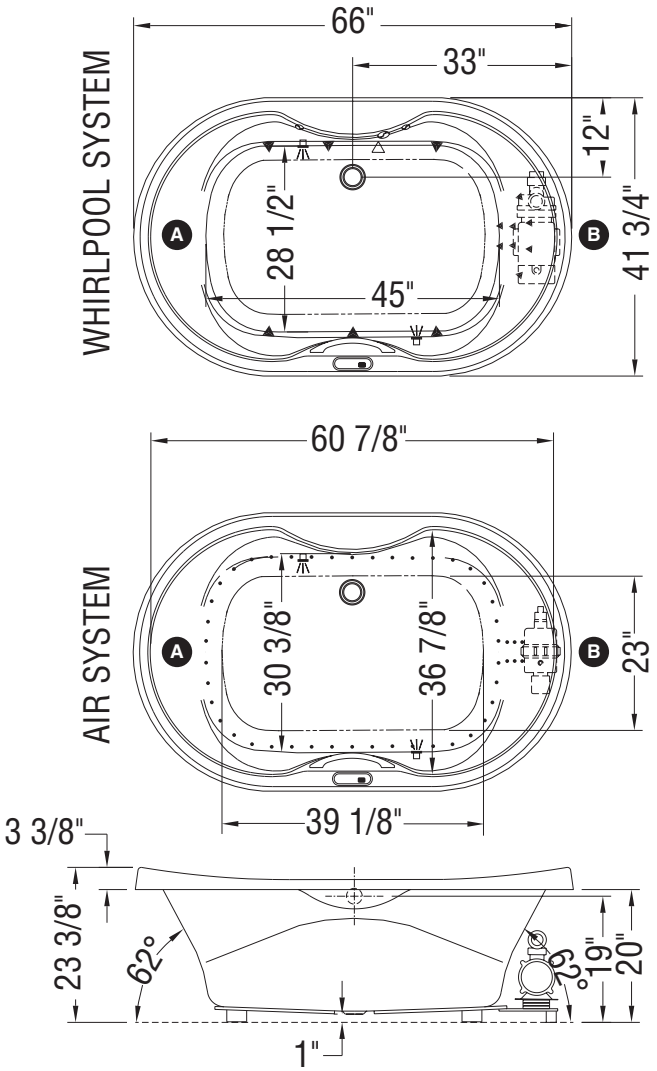

Note: Air / whirlpool backjets on same side as blower / pump

(▲) : Indicates whirlpool jets positioning

(△) : Indicates suction positioning

(•) : Indicates airjets positioning

( ) : Indicates standard grab bar positioning

Ⓐ : Specify blower and/or pump location when ordering

Ⓑ

( ) : Indicates chromatherapy light positioning

Bathtub base includes anti-vibration Neutra-Phone leg supports (not shown).

All dimensions are approximate. Structure measurements must be verified against the unit to ensure proper fit.

Go to Table of Contents

Living 7236

Material : Acrylic

Features

- Spacious bathtub with ergonomic design
- Comfortable backrest and ample deck space for faucet installation
- Inclined armrests with 1 angled 12 in. grab bar included [14]
- Drop-in installation with center drain
- Cut-out template included
- White cushion included with Hydromax and Combined systems
- Apron not available

LIVING 7236 - 102759

SKU	System	Color	Configuration	Dimensions & Weight	Packaging	MSRP
102759-000-001-000	Soaker - No System	White	Center Drain	72” x 36” x 23 3/8” / 88 lb	47 ft³	$ 2041
102759-004-001-100	Hydromax [1 4 17]					$ 6385
102759-055-001-100	Aerofeel [1 5]					$ 6385
102759-094-001-100	Combined Hydromax & Aerofeel [1 4 5 17]					$ 9857

COMMON OPTIONS

SKU	Description	MSRP
OPT10119-105	Metal trim kit for Aerofeel electronic control (factory installed) Available colors: Chrome **(084)** and Brushed Nickel **(105)**	$ 107
OPT10119-084		$ 107
OPT20141	Rest for Hydromax and combined systems [12]	$ 1173
OPT10054	Two chromatherapy lights for bathtubs without waterfall (factory installed)	$ 1010
OPT10095	Water heater assembly for whirlpool and combined systems (factory installed)	$ 1033
OPT20139	Ozonator for whirlpool system (factory installed)	$ 670
OPT10106-084	Metal trim kit for whirlpool and combined systems (factory installed) Available colors: Chrome **(084)** and Brushed Nickel **(105)**	$ 728
OPT10106-105		$ 728
OPT10109-084	Metallic finish grab bar replacing Acrylic grab bar Available colors: Chrome **(084)** and Brushed Nickel **(105)**	$ 345
OPT10109-105		$ 345

ACCESSORIES

SKU	Description	MSRP
10033272	Flexible main hose for electronic control air massage - kit (sold separately) 15 ft. extension	$ 407
10004306-001	White foam cushion with 2 suction pads (sold separately) Available color: White **(001)**	$ 138
10025081-084	Waste and overflow 27 in. flexible neck (sold separately) Available colors: Chrome **(084)** and Brushed Nickel **(105)**	$ 489
10025081-105		$ 489

FOOTNOTES

No	Description
1	Components for standard colour units equipped with systems are colour-coordinated. Trim kit and/or air push with metallic finish can be added (additional charge applies). For non-standard colour units, please specify trim kit and/or air push colour (additional charge applies for metallic finishes). Please note that the positioning of the system’s control could be in conflict with the door if one was installed on the unit. To insure compatibility, please contact customer service.
4	For details on pump position and requirements, see technical drawings on https://www.maax.com. When there is a pump position A or B indicated on the technical drawing, please specify position when ordering.
5	For details on blower position and requirements, see technical drawings on https://www.maax.com. When there is a blower position A or B indicated on the technical drawing, please specify position when ordering.
12	In combined systems, only the pump is replaced with the Rest. The blower remains the same.
14	Standard grab bars for standard colour units are colour-coordinated. Grab bars with metallic finish can be added (additional charge applies).

FOOTNOTES

No	Description
17	Includes Backmax and Footmax jets. Souvenir with apron and Living bathtub models do not include Footmax jets.

WHIRLPOOL SYSTEM

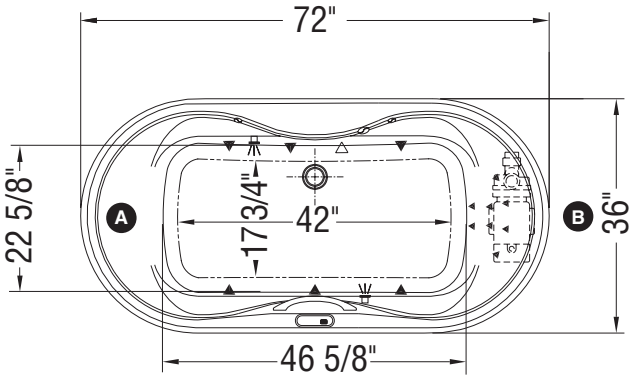

AIR SYSTEM

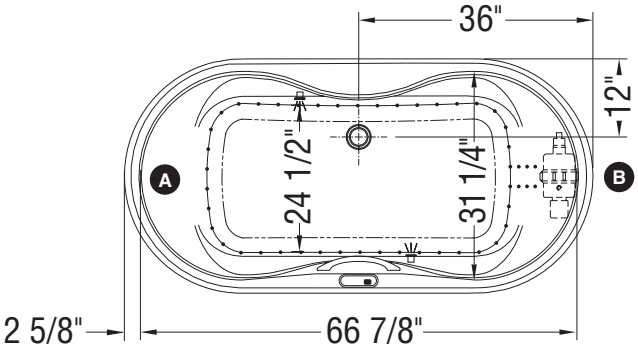

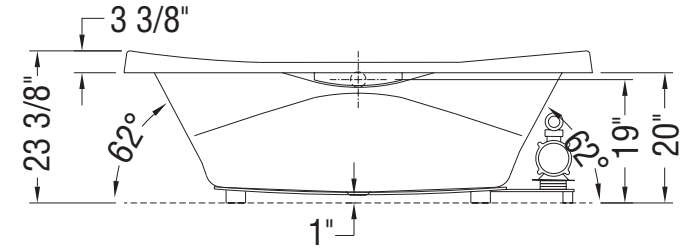

Note: Air / whirlpool backjets on same side as blower / pump

(▲) : Indicates whirlpool jets positioning
(△) : Indicates suction positioning
(•) : Indicates airjets positioning
( ) : Indicates chromatherapy light positioning

Ⓐ : Specify blower and/or pump location when ordering
Ⓑ
( ): Indicates standard grab bar positioning

Bathtub base includes anti-vibration Neutra-Phone leg supports (not shown).

All dimensions are approximate. Structure measurements must be verified against the unit to ensure proper fit.

Living 7242

Material : Acrylic

Features

- Spacious bathtub with ergonomic design
- Comfortable backrest and ample deck space for faucet installation
- Inclined armrests with 1 angled 12 in. grab bar included [14]
- Drop-in installation with center drain
- Cut-out template included
- White cushion included with Hydromax and Combined systems
- Apron not available

LIVING 7242 - 102757

SKU	System	Color	Configuration	Dimensions & Weight	Packaging	MSRP
102757-000-001-000	Soaker - No System	White	Center Drain	72” x 42” x 23 3/8” / 99 lb	47 ft³	$ 2074
102757-004-001-100	Hydromax [1 4 17]					$ 6418
102757-055-001-100	Aerofeel [1 5]					$ 6418
102757-094-001-100	Combined Hydromax & Aerofeel [1 4 5 17]					$ 9890

COMMON OPTIONS

SKU	Description	MSRP
OPT10119-105	Metal trim kit for Aerofeel electronic control (factory installed) Available colors: Chrome **(084)** and Brushed Nickel **(105)**	$ 107
OPT10119-084		$ 107
OPT20141	Rest for Hydromax and combined systems [12]	$ 1173
OPT10054	Two chromatherapy lights for bathtubs without waterfall (factory installed)	$ 1010
OPT10095	Water heater assembly for whirlpool and combined systems (factory installed)	$ 1033
OPT20139	Ozonator for whirlpool system (factory installed)	$ 670
OPT10106-084	Metal trim kit for whirlpool and combined systems (factory installed) Available colors: Chrome **(084)** and Brushed Nickel **(105)**	$ 728
OPT10106-105		$ 728
OPT10109-084	Metallic finish grab bar replacing Acrylic grab bar Available colors: Chrome **(084)** and Brushed Nickel **(105)**	$ 345
OPT10109-105		$ 345

ACCESSORIES

SKU	Description	MSRP
10033272	Flexible main hose for electronic control air massage - kit (sold separately) 15 ft. extension	$ 407
10004306-001	White foam cushion with 2 suction pads (sold separately) Available color: White **(001)**	$ 138
10025081-084	Waste and overflow 27 in. flexible neck (sold separately) Available colors: Chrome **(084)** and Brushed Nickel **(105)**	$ 489
10025081-105		$ 489

FOOTNOTES

No	Description
1	Components for standard colour units equipped with systems are colour-coordinated. Trim kit and/or air push with metallic finish can be added (additional charge applies). For non-standard colour units, please specify trim kit and/or air push colour (additional charge applies for metallic finishes). Please note that the positioning of the system’s control could be in conflict with the door if one was installed on the unit. To insure compatibility, please contact customer service.
4	For details on pump position and requirements, see technical drawings on https://www.maax.com. When there is a pump position A or B indicated on the technical drawing, please specify position when ordering.
5	For details on blower position and requirements, see technical drawings on https://www.maax.com. When there is a blower position A or B indicated on the technical drawing, please specify position when ordering.
12	In combined systems, only the pump is replaced with the Rest. The blower remains the same.
14	Standard grab bars for standard colour units are colour-coordinated. Grab bars with metallic finish can be added (additional charge applies).

FOOTNOTES

No	Description
17	Includes Backmax and Footmax jets. Souvenir with apron and Living bathtub models do not include Footmax jets.

WHIRLPOOL SYSTEM

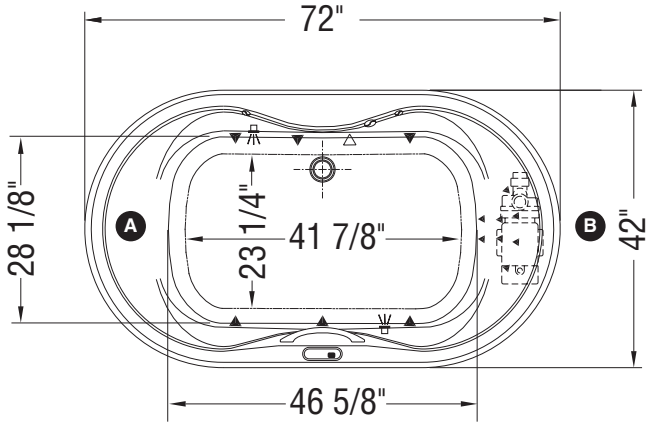

AIR SYSTEM

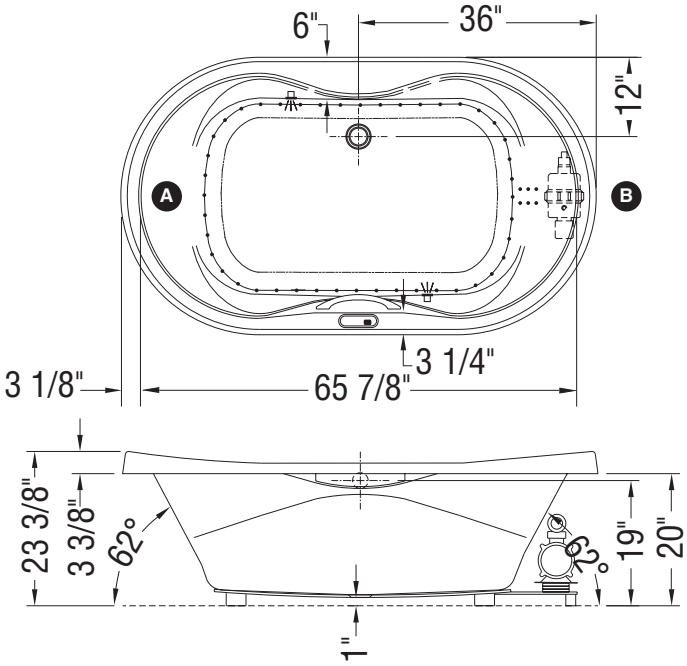

Note: Air / whirlpool backjets on same side as blower / pump

(▲) : Indicates whirlpool jets positioning
(△) : Indicates suction positioning
(•) : Indicates airjets positioning
( ) : Indicates chromatherapy light positioning

Ⓐ : Specify blower and/or pump location when ordering
Ⓑ
( ): Indicates standard grab bar positioning

Bathtub base includes anti-vibration Neutra-Phone leg supports (not shown).
All dimensions are approximate. Structure measurements must be verified against the unit to ensure proper fit.

Islander AFR

Material : Acrylic

Features

- Oval shape for maximized bathing well
- Above-the-Floor Rough (AFR) (3 in.) included
- Armrests and textured bottom
- Integrated apron (no access panel available)
- Integrated tiling flange
- Alcove installation

ISLANDER AFR - 102895

SKU	System	Color	Configuration	Dimensions & Weight	Packaging	MSRP
102895-000-001-001	Soaker - No System	White	Left Drain	60” x 38” x 22 1/2” / 68 lb	38 ft³	$ 1690
102895-000-001-002			Right Drain			$ 1690
102895-001-001-001	Whirlpool [1 4]		Left Drain			$ 3477
102895-001-001-002			Right Drain			$ 3477
102895-103-001-100	Aeroeffect [1 2 5]		Left Drain			$ 4703
102895-103-001-101			Right Drain			$ 4703
102895-L-096-001	Combined Whirlpool & Aeroeffect [1 3]		Left Drain			$ 6002
102895-R-096-001			Right Drain			$ 6002

COMMON OPTIONS

SKU	Description	MSRP
OPT20137-004	Cable-operated waste and overflow (16 in. to 22 in.) (included in product packaging when purchased) Available colors: White **(001)**, Bone **(004)**, Chrome **(084)** and Brushed Nickel **(105)**	$ 362
OPT20137-084		$ 362
OPT20137-105		$ 362
OPT20137-001		$ 362
OPT10053	One chromatherapy light (factory installed) [54]	$ 790
OPT10095	Water heater assembly for whirlpool and combined systems (factory installed)	$ 1033
OPT10106-084	Metal trim kit for whirlpool and combined systems (factory installed) Available colors: Chrome **(084)** and Brushed Nickel **(105)**	$ 728
OPT10106-105		$ 728
OPT20029-105	Metal trim kit for air push control (factory installed) Available colors: Chrome **(084)** and Brushed Nickel **(105)**	$ 82
OPT20029-084		$ 82

ACCESSORIES

SKU	Description	MSRP
10006923	Flexible main hose (9 ft. extension) for air push control air massage - Kit (sold separately)	$ 209
10004306-001	White foam cushion with 2 suction pads (sold separately) Available color: White **(001)**	$ 138
10006887-105	Metal trim kit for Whirlpool and combined systems (sold separately) Available colors: Chrome **(084)** and Brushed Nickel **(105)**	$ 728
10006887-084		$ 728
10034250-084	Metal trim kit for Aeroeffect with Air Push Control (sold separately) Available colors: Chrome **(084)** and Brushed Nickel **(105)**	$ 82
10034250-105		$ 82
10022491-004	Cable-operated waste and overflow (16 in. to 22 in.) (sold separately) Available colors: White **(001)**, Bone **(004)**, Chrome **(084)** and Brushed Nickel **(105)**	$ 362

FOOTNOTES

No	Description
1	Components for standard colour units equipped with systems are colour-coordinated. Trim kit and/or air push with metallic finish can be added (additional charge applies). For non-standard colour units, please specify trim kit and/or air push colour (additional charge applies for metallic finishes). Please note that the positioning of the system's control could be in conflict with the door if one was installed on the unit. To insure compatibility, please contact customer service.
2	Please order flexible main hose 10006923 for installation of the blower further than 3 ft from the bathtub. For the Tandem models and the Serenade models (freestanding and drop-in), the blower is always remote and not factory installed so a 9 ft flexible main hose is included. Please note that the positioning of the system's control could be in conflict with the door if one was installed on the unit. To insure compatibility, please contact customer service.
3	The blower is not factory installed (remote). 9 ft flexible main hose included. Please note that the positioning of the system's control could be in conflict with the door if one was installed on the unit. To insure compatibility, please contact customer service.
4	For details on pump position and requirements, see technical drawings on https://www.maax.com. When there is a pump position A or B indicated on the technical drawing, please specify position when ordering.
5	For details on blower position and requirements, see technical drawings on https://www.maax.com. When there is a blower position A or B indicated on the technical drawing, please specify position when ordering.
54	A selection of units come with an access panel by default when equipped with a system. However, if the unit is only equipped with chromatherapy, the access panel will not be provided by default.

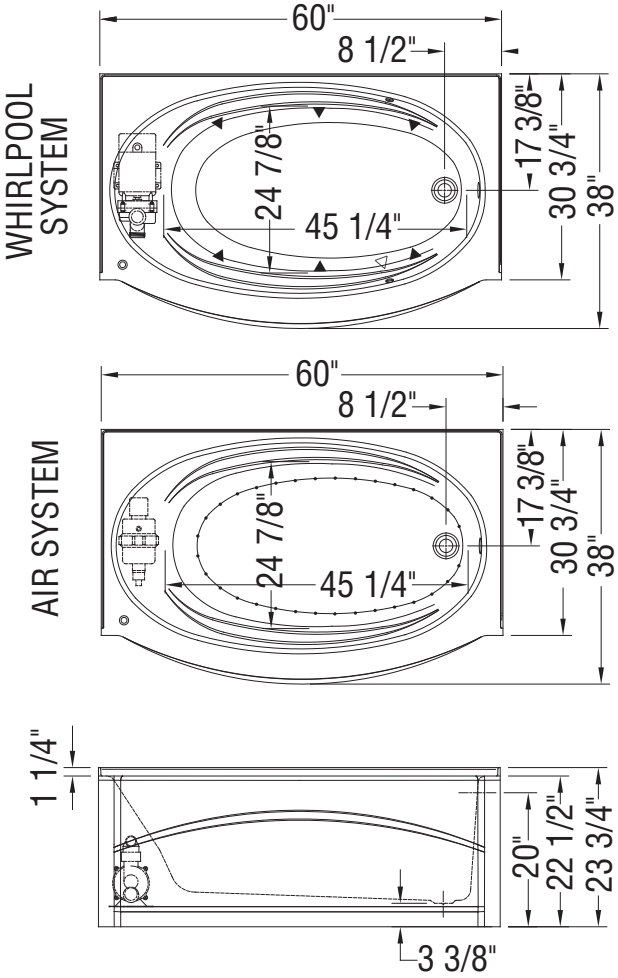

(▲) : Indicates Whirlpool jets positioning
(●) : Indicates airjets positioning
(△) : Indicates suction positioning

All dimensions are approximate. Structure measurements must be verified against the unit to ensure proper fit.

Islander AFR DTF

Material : Acrylic

Features

- Oval shape for maximized bathing well
- Above-the-Floor Rough (AFR) (3 in.) included
- Armrests and textured bottom
- Integrated apron (no access panel available)
- Integrated double tiling flange
- Alcove installation

ISLANDER AFR - DTF - 102784

SKU	System	Color	Configuration	Dimensions & Weight	Packaging	MSRP
102784-000-001-001	Soaker - No System	White	Left Drain	60” x 38” x 22 1/2” / 68 lb	38 ft³	$ 1690
102784-000-001-002			Right Drain			$ 1690
102784-001-001-001	Whirlpool [1 4]		Left Drain			$ 3477
102784-001-001-002			Right Drain			$ 3477
102784-103-001-100	Aeroeffect [1 2 5]		Left Drain			$ 4703
102784-103-001-101			Right Drain			$ 4703
102784-L-096-001	Combined Whirlpool & Aeroeffect [1 3]		Left Drain			$ 6002
102784-R-096-001			Right Drain			$ 6002

COMMON OPTIONS

SKU	Description	MSRP
OPT20137-004	Cable-operated waste and overflow (16 in. to 22 in.) (included in product packaging when purchased) Available colors: White **(001)**, Bone **(004)**, Chrome **(084)** and Brushed Nickel **(105)**	$ 362
OPT20137-084		$ 362
OPT20137-105		$ 362
OPT20137-001		$ 362
OPT10053	One chromatherapy light (factory installed) [54]	$ 790
OPT10095	Water heater assembly for whirlpool and combined systems (factory installed)	$ 1033
OPT10106-084	Metal trim kit for whirlpool and combined systems (factory installed) Available colors: Chrome **(084)** and Brushed Nickel **(105)**	$ 728
OPT10106-105		$ 728
OPT20029-105	Metal trim kit for air push control (factory installed) Available colors: Chrome **(084)** and Brushed Nickel **(105)**	$ 82
OPT20029-084		$ 82

ACCESSORIES

SKU	Description	MSRP
10006923	Flexible main hose (9 ft. extension) for air push control air massage - Kit (sold separately)	$ 209
10004306-001	White foam cushion with 2 suction pads (sold separately) Available color: White **(001)**	$ 138
10006887-105	Metal trim kit for Whirlpool and combined systems (sold separately) Available colors: Chrome **(084)** and Brushed Nickel **(105)**	$ 728
10006887-084		$ 728
10034250-084	Metal trim kit for Aeroeffect with Air Push Control (sold separately) Available colors: Chrome **(084)** and Brushed Nickel **(105)**	$ 82
10034250-105		$ 82
10022491-004	Cable-operated waste and overflow (16 in. to 22 in.) (sold separately) Available colors: White **(001)**, Bone **(004)**, Chrome **(084)** and Brushed Nickel **(105)**	$ 362

FOOTNOTES

No	Description
1	Components for standard colour units equipped with systems are colour-coordinated. Trim kit and/or air push with metallic finish can be added (additional charge applies). For non-standard colour units, please specify trim kit and/or air push colour (additional charge applies for metallic finishes). Please note that the positioning of the system's control could be in conflict with the door if one was installed on the unit. To insure compatibility, please contact customer service.
2	Please order flexible main hose 10006923 for installation of the blower further than 3 ft from the bathtub. For the Tandem models and the Serenade models (freestanding and drop-in), the blower is always remote and not factory installed so a 9 ft flexible main hose is included. Please note that the positioning of the system's control could be in conflict with the door if one was installed on the unit. To insure compatibility, please contact customer service.
3	The blower is not factory installed (remote). 9 ft flexible main hose included. Please note that the positioning of the system's control could be in conflict with the door if one was installed on the unit. To insure compatibility, please contact customer service.
4	For details on pump position and requirements, see technical drawings on https://www.maax.com. When there is a pump position A or B indicated on the technical drawing, please specify position when ordering.
5	For details on blower position and requirements, see technical drawings on https://www.maax.com. When there is a blower position A or B indicated on the technical drawing, please specify position when ordering.
54	A selection of units come with an access panel by default when equipped with a system. However, if the unit is only equipped with chromatherapy, the access panel will not be provided by default.

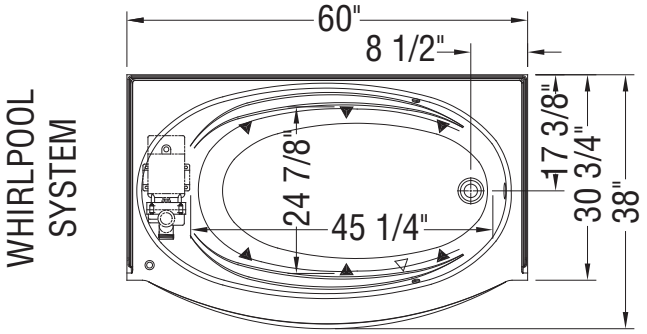

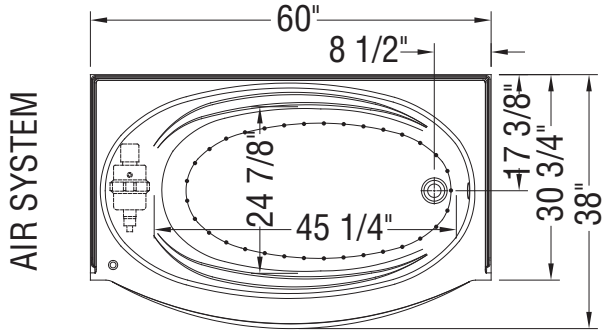

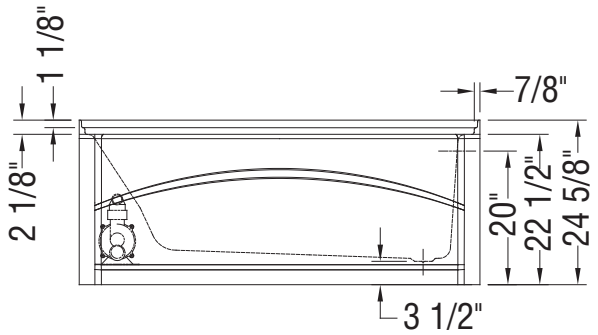

(▲) : Indicates Whirlpool jets positioning
(•) : Indicates airjets positioning
(△) : Indicates suction positioning

All dimensions are approximate. Structure measurements must be verified against the unit to ensure proper fit.

Go to Table of Contents

Vichy 6034

Material : Acrylic

Features

- Oval shaped bathtub
- Drop-in installation
- Relaxing armrests
- Ergonomic backrest and headrest
- End drain

VICHY 6034 - 102939

SKU	System	Color	Configuration	Dimensions & Weight	Packaging	MSRP
102939-000-001-000	Soaker - No System	White	End Drain	60 1/8” x 33 5/8” x 19 3/4” / 58 lb	26 ft³	$ 1185
102939-001-001	Whirlpool [1 4]					$ 2972
102939-096-001	Combined Whirlpool & Aeroeffect [1 3]					$ 5497
102939-103-001-100	Aeroeffect [1 2 5]					$ 4198

COMMON OPTIONS

SKU	Description	MSRP
OPT20137-004	Cable-operated waste and overflow (16 in. to 22 in.) (included in product packaging when purchased) Available colors: White **(001)**, Bone **(004)**, Chrome **(084)** and Brushed Nickel **(105)**	$ 362
OPT20137-084		$ 362
OPT20137-105		$ 362
OPT20137-001		$ 362
OPT10053	One chromatherapy light (factory installed) [54]	$ 790
OPT10095	Water heater assembly for whirlpool and combined systems (factory installed)	$ 1033
OPT10106-084	Metal trim kit for whirlpool and combined systems (factory installed) Available colors: Chrome **(084)** and Brushed Nickel **(105)**	$ 728
OPT10106-105		$ 728
OPT20029-105	Metal trim kit for air push control (factory installed) Available colors: Chrome **(084)** and Brushed Nickel **(105)**	$ 82
OPT20029-084		$ 82

ACCESSORIES

SKU	Description	MSRP
10006923	Flexible main hose (9 ft. extension) for air push control air massage - Kit (sold separately)	$ 209
10004306-001	White foam cushion with 2 suction pads (sold separately) Available color: White **(001)**	$ 138
10006887-105	Metal trim kit for Whirlpool and combined systems (sold separately) Available colors: Chrome **(084)** and Brushed Nickel **(105)**	$ 728
10006887-084		$ 728
10034250-084	Metal trim kit for Aeroeffect with Air Push Control (sold separately) Available colors: Chrome **(084)** and Brushed Nickel **(105)**	$ 82
10034250-105		$ 82
10022491-004	Cable-operated waste and overflow (16 in. to 22 in.) (sold separately) Available colors: White **(001)**, Bone **(004)**, Chrome **(084)** and Brushed Nickel **(105)**	$ 362

FOOTNOTES

No	Description
1	Components for standard colour units equipped with systems are colour-coordinated. Trim kit and/or air push with metallic finish can be added (additional charge applies). For non-standard colour units, please specify trim kit and/or air push colour (additional charge applies for metallic finishes). Please note that the positioning of the system’s control could be in conflict with the door if one was installed on the unit. To insure compatibility, please contact customer service.

FOOTNOTES

No	Description
2	Please order flexible main hose 10006923 for installation of the blower further than 3 ft from the bathtub. For the Tandem models and the Serenade models (freestanding and drop-in), the blower is always remote and not factory installed so a 9 ft flexible main hose is included. Please note that the positioning of the system's control could be in conflict with the door if one was installed on the unit. To insure compatibility, please contact customer service.
3	The blower is not factory installed (remote). 9 ft flexible main hose included. Please note that the positioning of the system's control could be in conflict with the door if one was installed on the unit. To insure compatibility, please contact customer service.
4	For details on pump position and requirements, see technical drawings on https://www.maax.com. When there is a pump position A or B indicated on the technical drawing, please specify position when ordering.
5	For details on blower position and requirements, see technical drawings on https://www.maax.com. When there is a blower position A or B indicated on the technical drawing, please specify position when ordering.
54	A selection of units come with an access panel by default when equipped with a system. However, if the unit is only equipped with chromatherapy, the access panel will not be provided by default.

WHIRLPOOL SYSTEM

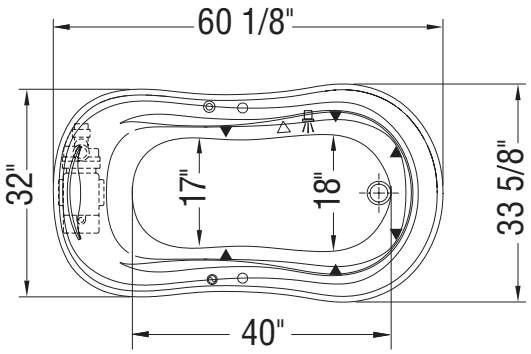

AIR SYSTEM

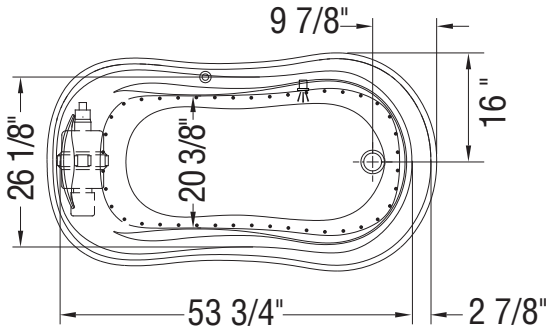

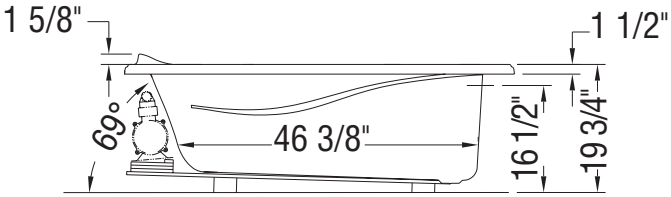

(▲) : Indicates Whirlpool jets positioning
(●) : Indicates airjets positioning
(△) : Indicates suction positioning
( ) : Indicates chromatherapy light positioning

All dimensions are approximate. Structure measurements must be verified against the unit to ensure proper fit.

Tandem 5454

Material : Acrylic

Features

- Corner shape bathtub
- Drop-in installation or corner installation with integrated tiling flange
- Textured floor with integrated seat
- Center drain
- Skirt available

TANDEM 5454 - 100875

SKU	System	Color	Configuration	Dimensions & Weight	Packaging	MSRP
100875-000-001-000	Soaker - No System	White	Center Drain	54 1/8” x 54 1/8” x 18 1/4” / 78 lb	35 ft^3	$ 1487
100875-001-001-000	Whirlpool [1 4]					$ 3274
100875-002-001-000	Multi-Pack [9]					$ 6710
100875-096-001	Combined Whirlpool & Aeroeffect [1 3]					$ 5799
100875-103-001	Aeroeffect [1 2 5]					$ 4500

COMMON OPTIONS

SKU	Description	MSRP
OPT10053	One chromatherapy light (factory installed) [54]	$ 790
OPT10095	Water heater assembly for whirlpool and combined systems (factory installed)	$ 1033
OPT10106-084	Metal trim kit for whirlpool and combined systems (factory installed) Available colors: Chrome **(084)** and Brushed Nickel **(105)**	$ 728
OPT10106-105		$ 728
OPT10113-007	6-in. acrylic grab bar (factory installed) [7] Available colors: White **(001)**, Bone **(004)**, Biscuit **(007)**, Chrome **(084)** and Brushed Nickel **(105)**	$ 398
OPT10113-004		$ 398
OPT10113-001		$ 398
OPT10113-084		$ 398
OPT10113-105		$ 398
OPT20029-105	Metal trim kit for air push control (factory installed) Available colors: Chrome **(084)** and Brushed Nickel **(105)**	$ 82
OPT20029-084		$ 82
OPT20137-004	Cable-operated waste and overflow (16 in. to 22 in.) (included in product packaging when purchased) Available colors: White **(001)**, Bone **(004)**, Chrome **(084)** and Brushed Nickel **(105)**	$ 362
OPT20137-084		$ 362
OPT20137-105		$ 362
OPT20137-001		$ 362
OPT10004	Nailing flange (factory installed) **OPT10004-R Right-hand drain** **OPT10004-L Left-hand drain** Note: For corner bathtubs, there is no need to specify a right or left-hand side when ordering this option. The flange will be installed on both sides of the unit.	$ 198
100913-000-001-000	Removable acrylic apron (access panel included) Specify: Standard colors: White **(001)**, Bone **(004)**, Biscuit **(007)**	$ 1223

ACCESSORIES

SKU	Description	MSRP
10006923	Flexible main hose (9 ft. extension) for air push control air massage - Kit (sold separately)	$ 209
10063099	Nailing flange (sold separately)	$ 198
10004306-001	White foam cushion with 2 suction pads (sold separately) Available color: White **(001)**	$ 138

ACCESSORIES

SKU	Description	MSRP
10006887-105	Metal trim kit for Whirlpool and combined systems (sold separately) Available colors: Chrome **(084)** and Brushed Nickel **(105)**	$ 728
10006887-084		$ 728
10034250-084	Metal trim kit for Aeroeffect with Air Push Control (sold separately) Available colors: Chrome **(084)** and Brushed Nickel **(105)**	$ 82
10034250-105		$ 82
10022491-004	Cable-operated waste and overflow (16 in. to 22 in.) (sold separately) Available colors: White **(001)**, Bone **(004)**, Chrome **(084)** and Brushed Nickel **(105)**	$ 362

FOOTNOTES

No	Description
1	Components for standard colour units equipped with systems are colour-coordinated. Trim kit and/or air push with metallic finish can be added (additional charge applies). For non-standard colour units, please specify trim kit and/or air push colour (additional charge applies for metallic finishes). Please note that the positioning of the system's control could be in conflict with the door if one was installed on the unit. To insure compatibility, please contact customer service.
2	Please order flexible main hose 10006923 for installation of the blower further than 3 ft from the bathtub. For the Tandem models and the Serenade models (freestanding and drop-in), the blower is always remote and not factory installed so a 9 ft flexible main hose is included. Please note that the positioning of the system's control could be in conflict with the door if one was installed on the unit. To insure compatibility, please contact customer service.
3	The blower is not factory installed (remote). 9 ft flexible main hose included. Please note that the positioning of the system's control could be in conflict with the door if one was installed on the unit. To insure compatibility, please contact customer service.
4	For details on pump position and requirements, see technical drawings on https://www.maax.com. When there is a pump position A or B indicated on the technical drawing, please specify position when ordering.
5	For details on blower position and requirements, see technical drawings on https://www.maax.com. When there is a blower position A or B indicated on the technical drawing, please specify position when ordering.
7	One 6 in. metal or acrylic grab bar is optional. Factory installed, only one positioning is possible (see technical drawings on https://www.maax.com).
9	6-Pack bathtubs are only available when units are without systems and in a standard colour.
54	A selection of units come with an access panel by default when equipped with a system. However, if the unit is only equipped with chromatherapy, the access panel will not be provided by default.

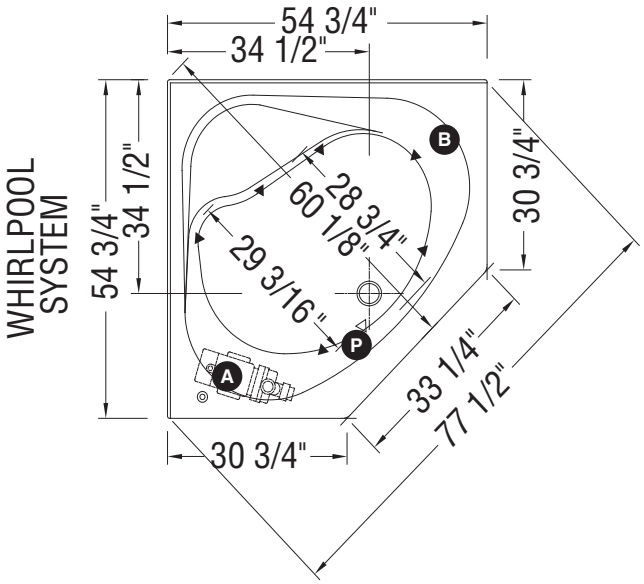

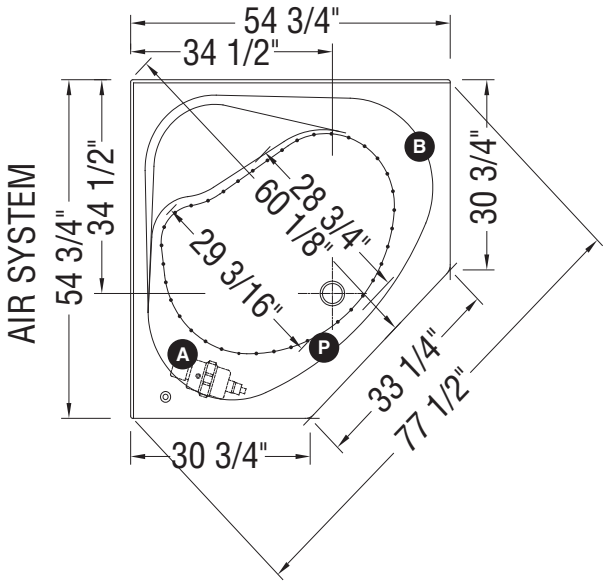

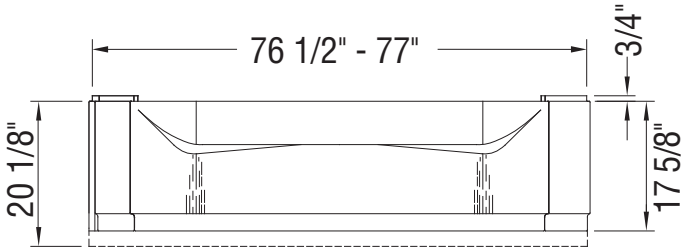

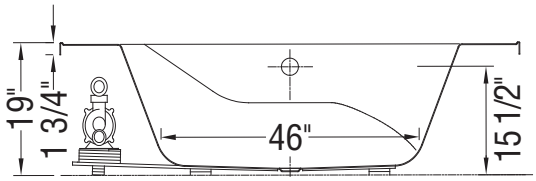

Ⓐ : Standard blower and/or pump location
Ⓑ : Optional blower and/or pump location
Ⓟ : Indicates optional grab bar positioning
(▲) : Indicates Whirlpool jets positioning
(•) : Indicates airjets positioning
(△) : Indicates suction positioning

All dimensions are approximate. Structure measurements must be verified against the unit to ensure proper fit.

Tandem 6060

Material : Acrylic

Features

- Corner shape bathtub
- Drop-in installation or with or without integrated tiling flange
- Textured floor with integrated seat
- Center drain
- Skirt available

TANDEM 6060 - 101077

SKU	System	Color	Configuration	Dimensions & Weight	Packaging	MSRP
101077-000-001-000	Soaker - No System	White	Center Drain	59 1/2” x 59 1/2” x 19 1/4” / 85 lb	46 ft³	$ 1818
101077-000-001-010						$ 1818
101077-001-001-000	Whirlpool [1 4]					$ 3605
101077-001-001-010						$ 3605
101077-002-001-000	Multi-Pack [9]					$ 8215
101077-002-001-010						$ 8215
101077-096-001	Combined Whirlpool & Aeroeffect [1 3]					$ 6130
101077-103-001-100	Aeroeffect [1 2 5]					$ 4831
101077-RL-096-001	Combined Whirlpool & Aeroeffect [1 3]					$ 6130
101077-RL-103-001	Aeroeffect [1 2 5]					$ 4831

COMMON OPTIONS

SKU	Description	MSRP
OPT10113-007	6-in. acrylic grab bar (factory installed) [7] Available colors: White **(001)**, Bone **(004)**, Biscuit **(007)**, Chrome **(084)** and Brushed Nickel **(105)**	$ 398
OPT10113-004		$ 398
OPT10113-001		$ 398
OPT10113-084		$ 398
OPT10113-105		$ 398
OPT20029-105	Metal trim kit for air push control (factory installed) Available colors: Chrome **(084)** and Brushed Nickel **(105)**	$ 82
OPT20029-084		$ 82
OPT20137-004	Cable-operated waste and overflow (16 in. to 22 in.) (included in product packaging when purchased) Available colors: White **(001)**, Bone **(004)**, Chrome **(084)** and Brushed Nickel **(105)**	$ 362
OPT20137-084		$ 362
OPT20137-105		$ 362
OPT20137-001		$ 362
OPT10053	One chromatherapy light (factory installed) [54]	$ 790
OPT10095	Water heater assembly for whirlpool and combined systems (factory installed)	$ 1033
OPT10106-084	Metal trim kit for whirlpool and combined systems (factory installed) Available colors: Chrome **(084)** and Brushed Nickel **(105)**	$ 728
OPT10106-105		$ 728
101081-000-001-000	Removable acrylic apron Specify: Standard colors: White **(001)**, Bone **(004)**, Biscuit **(007)**	$ 1306

ACCESSORIES

SKU	Description	MSRP
10006923	Flexible main hose (9 ft. extension) for air push control air massage - Kit (sold separately)	$ 209
10004306-001	White foam cushion with 2 suction pads (sold separately) Available color: White **(001)**	$ 138

ACCESSORIES

SKU	Description	MSRP
10006887-105	Metal trim kit for Whirlpool and combined systems (sold separately) Available colors: Chrome **(084)** and Brushed Nickel **(105)**	$ 728
10006887-084		$ 728
10034250-084	Metal trim kit for Aeroeffect with Air Push Control (sold separately) Available colors: Chrome **(084)** and Brushed Nickel **(105)**	$ 82
10034250-105		$ 82
10022491-004	Cable-operated waste and overflow (16 in. to 22 in.) (sold separately) Available colors: White **(001)**, Bone **(004)**, Chrome **(084)** and Brushed Nickel **(105)**	$ 362

FOOTNOTES

No	Description
1	Components for standard colour units equipped with systems are colour-coordinated. Trim kit and/or air push with metallic finish can be added (additional charge applies). For non-standard colour units, please specify trim kit and/or air push colour (additional charge applies for metallic finishes). Please note that the positioning of the system's control could be in conflict with the door if one was installed on the unit. To insure compatibility, please contact customer service.
2	Please order flexible main hose 10006923 for installation of the blower further than 3 ft from the bathtub. For the Tandem models and the Serenade models (freestanding and drop-in), the blower is always remote and not factory installed so a 9 ft flexible main hose is included. Please note that the positioning of the system's control could be in conflict with the door if one was installed on the unit. To insure compatibility, please contact customer service.
3	The blower is not factory installed (remote). 9 ft flexible main hose included. Please note that the positioning of the system's control could be in conflict with the door if one was installed on the unit. To insure compatibility, please contact customer service.
4	For details on pump position and requirements, see technical drawings on https://www.maax.com. When there is a pump position A or B indicated on the technical drawing, please specify position when ordering.
5	For details on blower position and requirements, see technical drawings on https://www.maax.com. When there is a blower position A or B indicated on the technical drawing, please specify position when ordering.
7	One 6 in. metal or acrylic grab bar is optional. Factory installed, only one positioning is possible (see technical drawings on https://www.maax.com).
54	A selection of units come with an access panel by default when equipped with a system. However, if the unit is only equipped with chromatherapy, the access panel will not be provided by default.

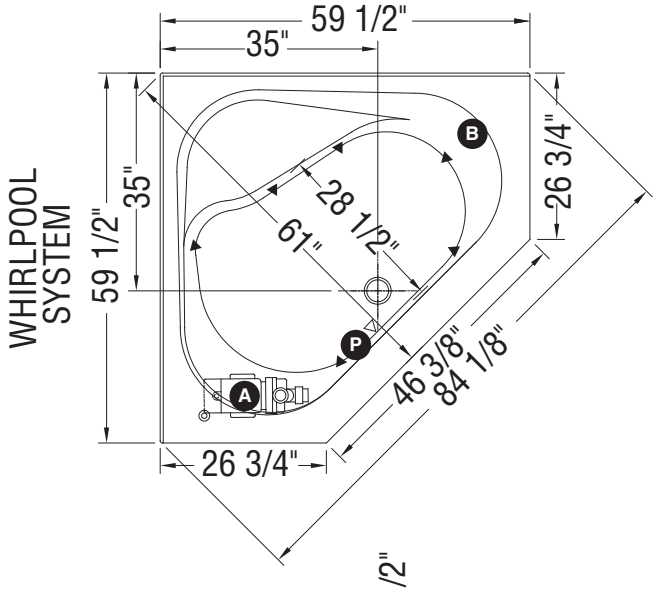

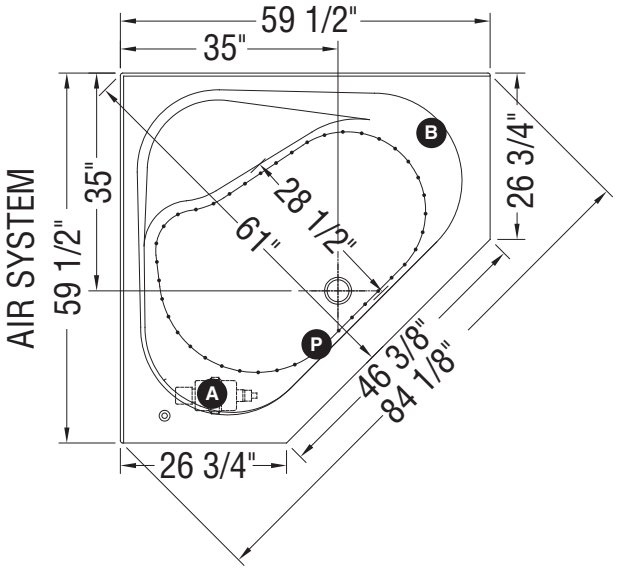

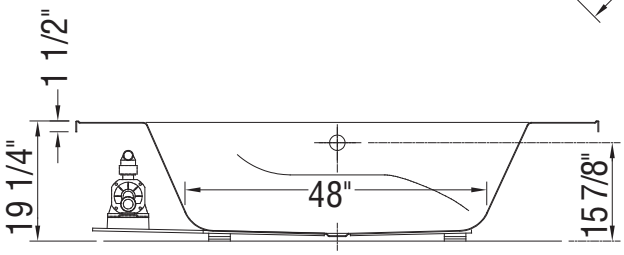

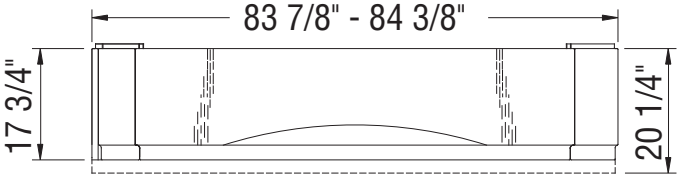

Ⓐ : Standard blower and/or pump location (▲) : Indicates Whirlpool jets positioning
Ⓑ : Optional blower and/or pump location (•) : Indicates airjets positioning
Ⓟ : Indicates optional grab bar positioning (△) : Indicates suction positioning

All dimensions are approximate. Structure measurements must be verified against the unit to ensure proper fit.

Tandem II 6060

Material : Acrylic

Features

- Corner shape bathtub
- Drop-in or corner installation (optional nailing flange available)
- Textured floor
- Center drain
- Apron available
- Tilling flange available

TANDEM II 6060 - 100054

SKU	System	Color	Configuration	Dimensions & Weight	Packaging	MSRP
100054-000-001-000	Soaker - No System	White	Center Drain	60” x 60” x 19 1/4” / 94 lb	35 ft³	$ 1818
100054-001-001-101	Whirlpool [1 4]					$ 3605
100054-096-001	Combined Whirlpool & Aeroeffect [1 3]					$ 6130
100054-103-001-100	Aeroeffect [1 2 5]					$ 4831

COMMON OPTIONS

SKU	Description	MSRP
OPT10053	One chromatherapy light (factory installed) [54]	$ 790
OPT10095	Water heater assembly for whirlpool and combined systems (factory installed)	$ 1033
OPT10352	Access panels option for apron	$ 339
OPT10106-084	Metal trim kit for whirlpool and combined systems (factory installed) Available colors: Chrome **(084)** and Brushed Nickel **(105)**	$ 728
OPT10106-105		$ 728
OPT10113-007	6-in. acrylic grab bar (factory installed) [7] Available colors: White **(001)**, Bone **(004)**, Biscuit **(007)**, Chrome **(084)** and Brushed Nickel **(105)**	$ 398
OPT10113-004		$ 398
OPT10113-001		$ 398
OPT10113-084		$ 398
OPT10113-105		$ 398
OPT20029-105	Metal trim kit for air push control (factory installed) Available colors: Chrome **(084)** and Brushed Nickel **(105)**	$ 82
OPT20029-084		$ 82
OPT20137-004	Cable-operated waste and overflow (16 in. to 22 in.) (included in product packaging when purchased) Available colors: White **(001)**, Bone **(004)**, Chrome **(084)** and Brushed Nickel **(105)**	$ 362
OPT20137-084		$ 362
OPT20137-105		$ 362
OPT20137-001		$ 362
OPT10004	Nailing flange (factory installed) **OPT10004-R Right-hand drain** **OPT10004-L Left-hand drain** Note: For corner bathtubs, there is no need to specify a right or left-hand side when ordering this option. The flange will be installed on both sides of the unit.	$ 198
100251-000-001-000	1-piece acrylic apron (reinforced with fiberglass) Specify: Standard colors: White **(001)**, Bone **(004)**, Biscuit **(007)**	$ 1306

ACCESSORIES

SKU	Description	MSRP
10006920	Tiling flange, 2 x 60 in. (sold separately)	$ 126
10006923	Flexible main hose (9 ft. extension) for air push control air massage - Kit (sold separately)	$ 209
10063099	Nailing flange (sold separately)	$ 198

ACCESSORIES

SKU	Description	MSRP
10004306-001	White foam cushion with 2 suction pads (sold separately) Available color: White **(001)**	$ 138
10006887-105	Metal trim kit for Whirlpool and combined systems (sold separately) Available colors: Chrome **(084)** and Brushed Nickel **(105)**	$ 728
10006887-084		$ 728
10034250-084	Metal trim kit for Aeroeffect with Air Push Control (sold separately) Available colors: Chrome **(084)** and Brushed Nickel **(105)**	$ 82
10034250-105		$ 82
10022491-004	Cable-operated waste and overflow (16 in. to 22 in.) (sold separately) Available colors: White **(001)**, Bone **(004)**, Chrome **(084)** and Brushed Nickel **(105)**	$ 362

FOOTNOTES

No	Description
1	Components for standard colour units equipped with systems are colour-coordinated. Trim kit and/or air push with metallic finish can be added (additional charge applies). For non-standard colour units, please specify trim kit and/or air push colour (additional charge applies for metallic finishes). Please note that the positioning of the system's control could be in conflict with the door if one was installed on the unit. To insure compatibility, please contact customer service.
2	Please order flexible main hose 10006923 for installation of the blower further than 3 ft from the bathtub. For the Tandem models and the Serenade models (freestanding and drop-in), the blower is always remote and not factory installed so a 9 ft flexible main hose is included. Please note that the positioning of the system's control could be in conflict with the door if one was installed on the unit. To insure compatibility, please contact customer service.
3	The blower is not factory installed (remote). 9 ft flexible main hose included. Please note that the positioning of the system's control could be in conflict with the door if one was installed on the unit. To insure compatibility, please contact customer service.
4	For details on pump position and requirements, see technical drawings on https://www.maax.com. When there is a pump position A or B indicated on the technical drawing, please specify position when ordering.
5	For details on blower position and requirements, see technical drawings on https://www.maax.com. When there is a blower position A or B indicated on the technical drawing, please specify position when ordering.
7	One 6 in. metal or acrylic grab bar is optional. Factory installed, only one positioning is possible (see technical drawings on https://www.maax.com).
54	A selection of units come with an access panel by default when equipped with a system. However, if the unit is only equipped with chromatherapy, the access panel will not be provided by default.

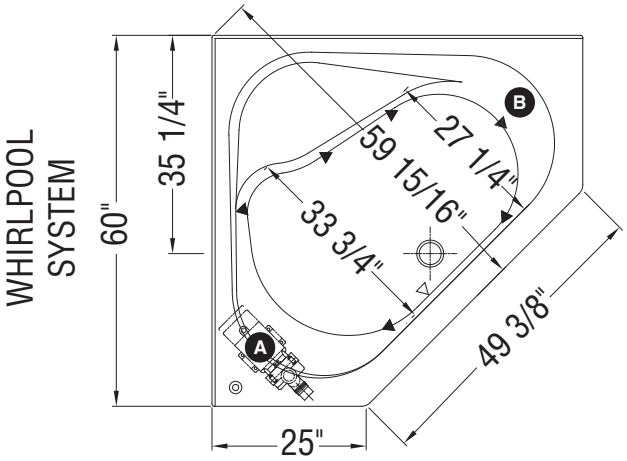

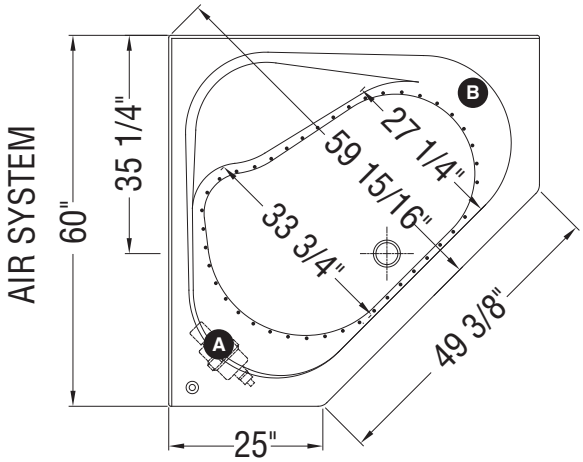

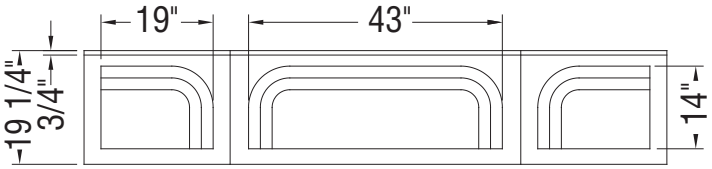

Note: In front view, skirt is shown flat.

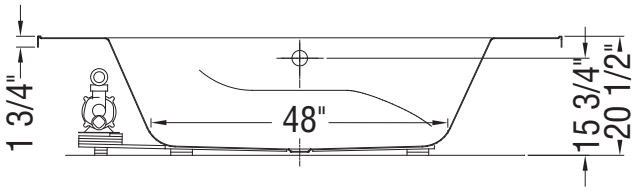

Ⓐ : Standard blower and/or pump location
Ⓑ : Optional blower and/or pump location
(▲) : Indicates Whirlpool jets positioning
(•) : Indicates airjets positioning
(△) : Indicates suction positioning

All dimensions are approximate. Structure measurements must be verified against the unit to ensure proper fit.

Tryst

Material : Acrylic

Features

- Corner shape bathtub
- Drop-in or corner installation
- Integrated armrest and textured floor
- Center drain
- Apron and nailing flange available

TRYST - 100053

SKU	System	Color	Configuration	Dimensions & Weight	Packaging	MSRP
100053-000-001-000	Soaker - No System	White	Center Drain	59 1/4” x 59 1/4” x 18 5/8” / 105 lb	44 ft^3	$ 1908
100053-001-001-000	Whirlpool [1 4]					$ 3695
100053-096-001	Combined Whirlpool & Aeroeffect [1 3]					$ 6220
100053-103-001-100	Aeroeffect [1 2 5]					$ 4921

COMMON OPTIONS

SKU	Description	MSRP
OPT10004	Nailing flange (factory installed) **OPT10004-R Right-hand drain** **OPT10004-L Left-hand drain** Note: For corner bathtubs, there is no need to specify a right or left-hand side when ordering this option. The flange will be installed on both sides of the unit.	$ 198
OPT10053	One chromatherapy light (factory installed) [54]	$ 790
OPT10095	Water heater assembly for whirlpool and combined systems (factory installed)	$ 1033
OPT10352	Access panels option for apron	$ 339
OPT10106-084	Metal trim kit for whirlpool and combined systems (factory installed) Available colors: Chrome **(084)** and Brushed Nickel **(105)**	$ 728
OPT10106-105		$ 728
OPT20029-105	Metal trim kit for air push control (factory installed) Available colors: Chrome **(084)** and Brushed Nickel **(105)**	$ 82
OPT20029-084		$ 82
OPT20137-004	Cable-operated waste and overflow (16 in. to 22 in.) (included in product packaging when purchased) Available colors: White **(001)**, Bone **(004)**, Chrome **(084)** and Brushed Nickel **(105)**	$ 362
OPT20137-084		$ 362
OPT20137-105		$ 362
OPT20137-001		$ 362
100985-000-001-000	Acrylic apron without access panel Specify: Standard colors: White **(001)**, Bone **(004)**, Biscuit **(007)**	$ 1306

ACCESSORIES

SKU	Description	MSRP
10006920	Tiling flange, 2 x 60 in. (sold separately)	$ 126
10006923	Flexible main hose (9 ft. extension) for air push control air massage - Kit (sold separately)	$ 209
10063099	Nailing flange (sold separately)	$ 198
10004306-001	White foam cushion with 2 suction pads (sold separately) Available color: White **(001)**	$ 138
10006887-105	Metal trim kit for Whirlpool and combined systems (sold separately) Available colors: Chrome **(084)** and Brushed Nickel **(105)**	$ 728
10006887-084		$ 728
10034250-084	Metal trim kit for Aeroeffect with Air Push Control (sold separately) Available colors: Chrome **(084)** and Brushed Nickel **(105)**	$ 82

ACCESSORIES

SKU	Description	MSRP
10034250-105	Metal trim kit for Aeroeffect with Air Push Control (sold separately) Available colors: Chrome **(084)** and Brushed Nickel **(105)**	$ 82
10022491-004	Cable-operated waste and overflow (16 in. to 22 in.) (sold separately) Available colors: White **(001)**, Bone **(004)**, Chrome **(084)** and Brushed Nickel **(105)**	$ 362

FOOTNOTES

No	Description
1	Components for standard colour units equipped with systems are colour-coordinated. Trim kit and/or air push with metallic finish can be added (additional charge applies). For non-standard colour units, please specify trim kit and/or air push colour (additional charge applies for metallic finishes). Please note that the positioning of the system's control could be in conflict with the door if one was installed on the unit. To insure compatibility, please contact customer service.
2	Please order flexible main hose 10006923 for installation of the blower further than 3 ft from the bathtub. For the Tandem models and the Serenade models (freestanding and drop-in), the blower is always remote and not factory installed so a 9 ft flexible main hose is included. Please note that the positioning of the system's control could be in conflict with the door if one was installed on the unit. To insure compatibility, please contact customer service.
3	The blower is not factory installed (remote). 9 ft flexible main hose included. Please note that the positioning of the system's control could be in conflict with the door if one was installed on the unit. To insure compatibility, please contact customer service.
4	For details on pump position and requirements, see technical drawings on https://www.maax.com. When there is a pump position A or B indicated on the technical drawing, please specify position when ordering.
5	For details on blower position and requirements, see technical drawings on https://www.maax.com. When there is a blower position A or B indicated on the technical drawing, please specify position when ordering.
54	A selection of units come with an access panel by default when equipped with a system. However, if the unit is only equipped with chromatherapy, the access panel will not be provided by default.

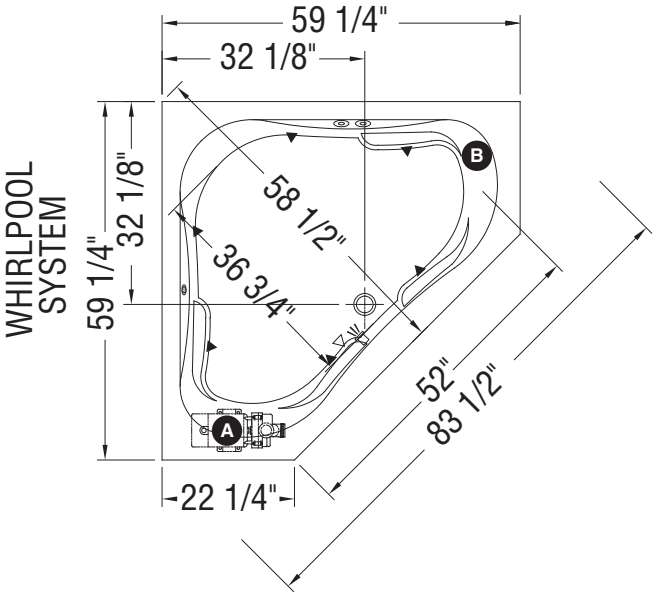

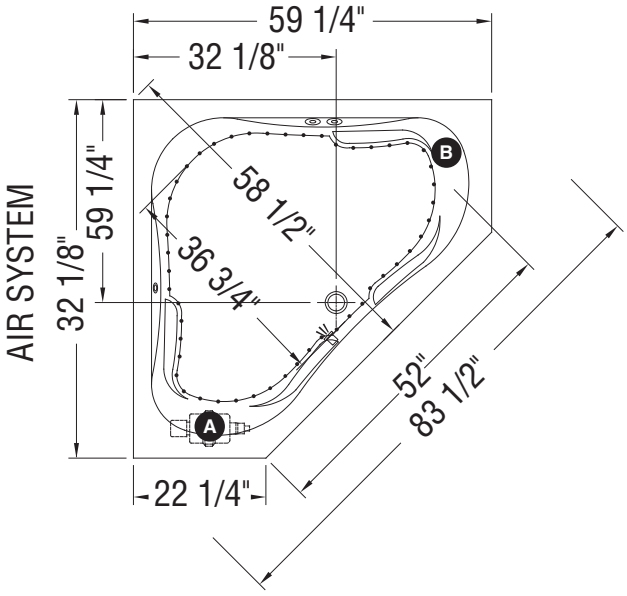

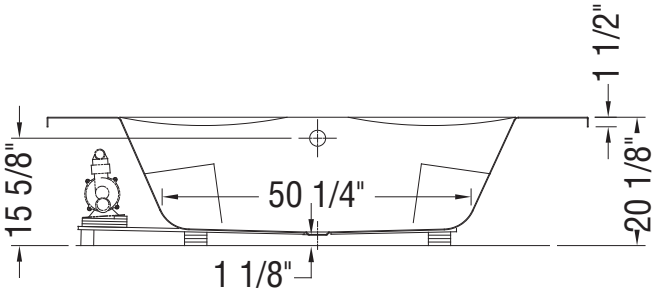

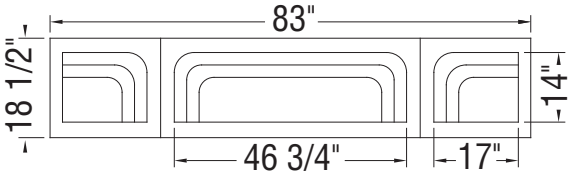

Ⓐ : Standard blower and/or pump location
Ⓑ : Optional blower and/or pump location
(▲) : Indicates Whirlpool jets positioning
(•) : Indicates airjets positioning
(△) : Indicates suction positioning
( ) : Indicates chromatherapy light positioning

All dimensions are approximate. Structure measurements must be verified against the unit to ensure proper fit.

Vichy 5555

Material : Acrylic

Features

- Elegant bathtub for 2 people
- Relaxing armrests and 2 headrests
- Deck for faucet
- Drop-in installation with center drain
- Apron and tiling flange available

VICHY 5555 - 102934

SKU	System	Color	Configuration	Dimensions & Weight	Packaging	MSRP
102934-000-001-000	Soaker - No System	White	Center Drain	54 3/4” x 54 3/4” x 20 3/4” / 78 lb	39 ft^3	$ 1683
102934-001-001-000	Whirlpool [1 4]					$ 3470
102934-096-001	Combined Whirlpool & Aeroeffect [1 3]					$ 5995
102934-103-001-100	Aeroeffect [1 2 5]					$ 4696

COMMON OPTIONS

SKU	Description	MSRP
OPT10106-084	Metal trim kit for whirlpool and combined systems (factory installed) Available colors: Chrome **(084)** and Brushed Nickel **(105)**	$ 728
OPT10106-105		$ 728
OPT20029-105	Metal trim kit for air push control (factory installed) Available colors: Chrome **(084)** and Brushed Nickel **(105)**	$ 82
OPT20029-084		$ 82
OPT20137-004	Cable-operated waste and overflow (16 in. to 22 in.) (included in product packaging when purchased) Available colors: White **(001)**, Bone **(004)**, Chrome **(084)** and Brushed Nickel **(105)**	$ 362
OPT20137-084		$ 362
OPT20137-105		$ 362
OPT20137-001		$ 362
OPT10053	One chromatherapy light (factory installed) [54]	$ 790
OPT10095	Water heater assembly for whirlpool and combined systems (factory installed)	$ 1033
105005-000-001-000	Removable acrylic apron Specify: Standard colors: White **(001)**, Bone **(004)**, Biscuit **(007)**	$ 1320

ACCESSORIES

SKU	Description	MSRP
10006920	Tiling flange, 2 x 60 in. (sold separately)	$ 126
10006923	Flexible main hose (9 ft. extension) for air push control air massage - Kit (sold separately)	$ 209
10004306-001	White foam cushion with 2 suction pads (sold separately) Available color: White **(001)**	$ 138
10006887-105	Metal trim kit for Whirlpool and combined systems (sold separately) Available colors: Chrome **(084)** and Brushed Nickel **(105)**	$ 728
10006887-084		$ 728
10034250-084	Metal trim kit for Aeroeffect with Air Push Control (sold separately) Available colors: Chrome **(084)** and Brushed Nickel **(105)**	$ 82
10034250-105		$ 82
10022491-004	Cable-operated waste and overflow (16 in. to 22 in.) (sold separately) Available colors: White **(001)**, Bone **(004)**, Chrome **(084)** and Brushed Nickel **(105)**	$ 362

FOOTNOTES

No	Description
1	Components for standard colour units equipped with systems are colour-coordinated. Trim kit and/or air push with metallic finish can be added (additional charge applies). For non-standard colour units, please specify trim kit and/or air push colour (additional charge applies for metallic finishes). Please note that the positioning of the system's control could be in conflict with the door if one was installed on the unit. To insure compatibility, please contact customer service.
2	Please order flexible main hose 10006923 for installation of the blower further than 3 ft from the bathtub. For the Tandem models and the Serenade models (freestanding and drop-in), the blower is always remote and not factory installed so a 9 ft flexible main hose is included. Please note that the positioning of the system's control could be in conflict with the door if one was installed on the unit. To insure compatibility, please contact customer service.
3	The blower is not factory installed (remote). 9 ft flexible main hose included. Please note that the positioning of the system's control could be in conflict with the door if one was installed on the unit. To insure compatibility, please contact customer service.
4	For details on pump position and requirements, see technical drawings on https://www.maax.com. When there is a pump position A or B indicated on the technical drawing, please specify position when ordering.
5	For details on blower position and requirements, see technical drawings on https://www.maax.com. When there is a blower position A or B indicated on the technical drawing, please specify position when ordering.
54	A selection of units come with an access panel by default when equipped with a system. However, if the unit is only equipped with chromatherapy, the access panel will not be provided by default.

WHIRLPOOL SYSTEM

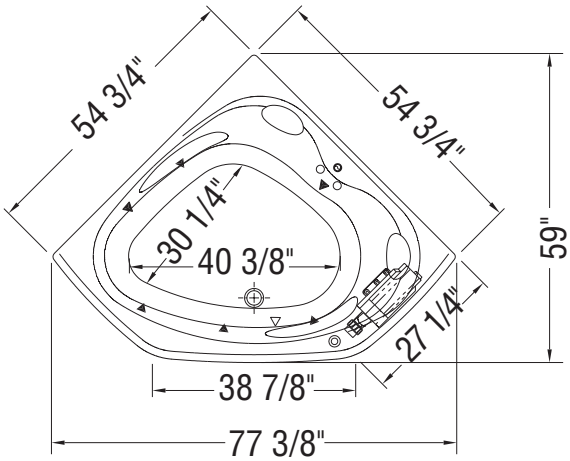

AIR SYSTEM

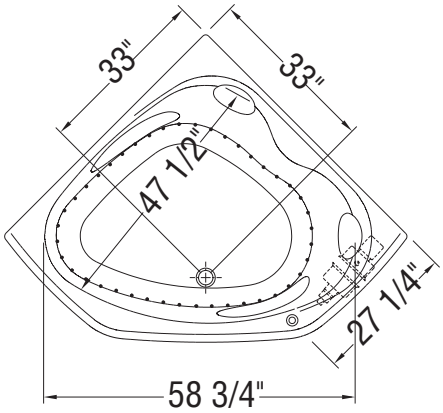

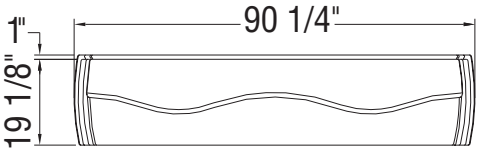

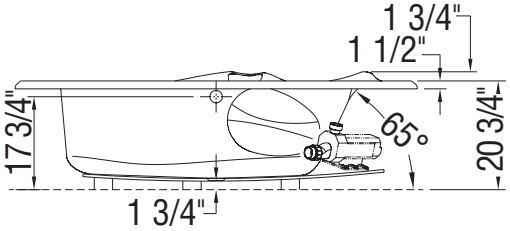

(▲) : Indicates Whirlpool jets positioning
(•) : Indicates airjets positioning
(△) : Indicates suction positioning

All dimensions are approximate. Structure measurements must be verified against the unit to ensure proper fit.

Vichy 6043 ASY

Material : Acrylic

Features

- Asymetric shape bathtub
- Relaxing armrests and two headrests
- Ergonomic backrest and deck for faucet
- Apron and tilling flange available
- Cut-out template included
- Available in right- and left-hand drain (specify when ordering)
- Off-center drain
- Drop-in installation
- Apron available
- Cut-out template included

VICHY 6043 ASY - 102937

SKU	System	Color	Configuration	Dimensions & Weight	Packaging	MSRP
102937-000-001-001	Soaker - No System	White	Left Drain	59 7/8” x 42 7/8” x 20 1/2” / 65 lb	35 ft³	$ 1482
102937-000-001-002			Right Drain			$ 1482
102937-103-001-100	Aeroeffect [1 2 5]		Left Drain			$ 4495
102937-103-001-101			Right Drain			$ 4495
102937-L-001-001	Whirlpool [1 4]		Left Drain			$ 3269
102937-L-096-001	Combined Whirlpool & Aeroeffect [1 3]					$ 5794
102937-R-001-001	Whirlpool [1 4]		Right Drain			$ 3269
102937-R-096-001	Combined Whirlpool & Aeroeffect [1 3]					$ 5794

COMMON OPTIONS

SKU	Description	MSRP
OPT10106-084	Metal trim kit for whirlpool and combined systems (factory installed) Available colors: Chrome **(084)** and Brushed Nickel **(105)**	$ 728
OPT10106-105		$ 728
OPT20029-105	Metal trim kit for air push control (factory installed) Available colors: Chrome **(084)** and Brushed Nickel **(105)**	$ 82
OPT20029-084		$ 82
OPT20137-004	Cable-operated waste and overflow (16 in. to 22 in.) (included in product packaging when purchased) Available colors: White **(001)**, Bone **(004)**, Chrome **(084)** and Brushed Nickel **(105)**	$ 362
OPT20137-084		$ 362
OPT20137-105		$ 362
OPT20137-001		$ 362
OPT10053	One chromatherapy light (factory installed) [54]	$ 790
OPT10095	Water heater assembly for whirlpool and combined systems (factory installed)	$ 1033
105004-000-001-001	Removable acrylic apron **105004-R-000-XXX Right-hand drain** **105004-L-000-XXX Left-hand drain** Specify: Standard colors: White **(001)**, Bone **(004)**, Biscuit **(007)**	$ 1100
105004-000-001-002		$ 1100

ACCESSORIES

SKU	Description	MSRP
10006920	Tiling flange, 2 x 60 in. (sold separately)	$ 126
10006923	Flexible main hose (9 ft. extension) for air push control air massage - Kit (sold separately)	$ 209
10004306-001	White foam cushion with 2 suction pads (sold separately) Available color: White **(001)**	$ 138
10006887-105	Metal trim kit for Whirlpool and combined systems (sold separately) Available colors: Chrome **(084)** and Brushed Nickel **(105)**	$ 728
10006887-084		$ 728
10034250-084	Metal trim kit for Aeroeffect with Air Push Control (sold separately) Available colors: Chrome **(084)** and Brushed Nickel **(105)**	$ 82

ACCESSORIES

SKU	Description	MSRP
10034250-105	Metal trim kit for Aeroeffect with Air Push Control (sold separately) Available colors: Chrome **(084)** and Brushed Nickel **(105)**	$ 82
10022491-004	Cable-operated waste and overflow (16 in. to 22 in.) (sold separately) Available colors: White **(001)**, Bone **(004)**, Chrome **(084)** and Brushed Nickel **(105)**	$ 362

FOOTNOTES

No	Description
1	Components for standard colour units equipped with systems are colour-coordinated. Trim kit and/or air push with metallic finish can be added (additional charge applies). For non-standard colour units, please specify trim kit and/or air push colour (additional charge applies for metallic finishes). Please note that the positioning of the system's control could be in conflict with the door if one was installed on the unit. To insure compatibility, please contact customer service.
2	Please order flexible main hose 10006923 for installation of the blower further than 3 ft from the bathtub. For the Tandem models and the Serenade models (freestanding and drop-in), the blower is always remote and not factory installed so a 9 ft flexible main hose is included. Please note that the positioning of the system's control could be in conflict with the door if one was installed on the unit. To insure compatibility, please contact customer service.
3	The blower is not factory installed (remote). 9 ft flexible main hose included. Please note that the positioning of the system's control could be in conflict with the door if one was installed on the unit. To insure compatibility, please contact customer service.
4	For details on pump position and requirements, see technical drawings on https://www.maax.com. When there is a pump position A or B indicated on the technical drawing, please specify position when ordering.
5	For details on blower position and requirements, see technical drawings on https://www.maax.com. When there is a blower position A or B indicated on the technical drawing, please specify position when ordering.
54	A selection of units come with an access panel by default when equipped with a system. However, if the unit is only equipped with chromatherapy, the access panel will not be provided by default.

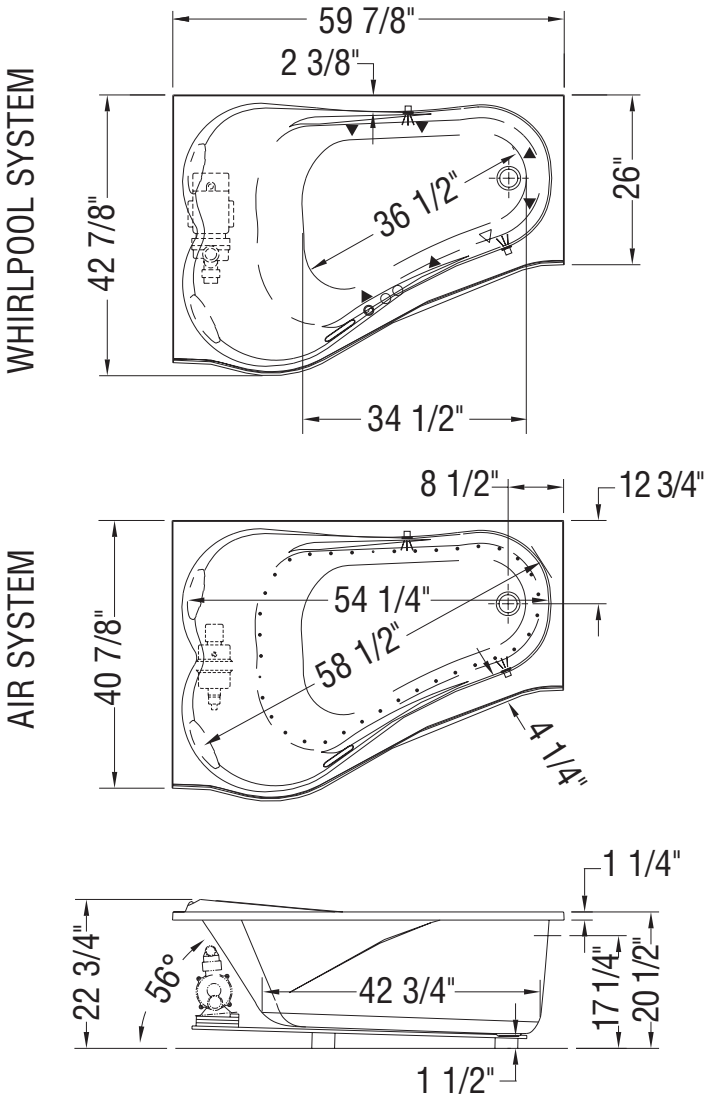

(▲) : Indicates whirlpool jets positioning
(△) : Indicates suction positioning
(•) : Indicates airjets positioning
( ) : Indicates chromatherapy light positioning
Bathtub base includes anti-vibration Neutra-Phone leg supports (not shown).
All dimensions are approximate. Structure measurements must be verified against the unit to ensure proper fit.

Vichy 6060

Material : Acrylic

Features

- Elegant bathtub for 2 people
- Relaxing armrests and 2 headrests
- Deck for faucet
- Drop-in installation with center drain
- Apron and tiling flange available

VICHY 6060 - 102579

SKU	System	Color	Configuration	Dimensions & Weight	Packaging	MSRP
102579-000-001-000	Soaker - No System	White	Center Drain	59 3/4” x 59 3/4” x 20 3/4” / 92 lb	52 ft^3	$ 2180
102579-001-001	Whirlpool [1 4]					$ 3967
102579-096-001	Combined Whirlpool & Aeroeffect [1 3]					$ 6492
102579-103-001-100	Aeroeffect [1 2 5]					$ 5193

COMMON OPTIONS

SKU	Description	MSRP
OPT10106-084	Metal trim kit for whirlpool and combined systems (factory installed) Available colors: Chrome **(084)** and Brushed Nickel **(105)**	$ 728
OPT10106-105		$ 728
OPT20029-105	Metal trim kit for air push control (factory installed) Available colors: Chrome **(084)** and Brushed Nickel **(105)**	$ 82
OPT20029-084		$ 82
OPT20137-004	Cable-operated waste and overflow (16 in. to 22 in.) (included in product packaging when purchased) Available colors: White **(001)**, Bone **(004)**, Chrome **(084)** and Brushed Nickel **(105)**	$ 362
OPT20137-084		$ 362
OPT20137-105		$ 362
OPT20137-001		$ 362
OPT10053	One chromatherapy light (factory installed) [54]	$ 790
OPT10095	Water heater assembly for whirlpool and combined systems (factory installed)	$ 1033
105003-000-001-000	Removable acrylic apron Specify: Standard colors: White **(001)**, Bone **(004)**, Biscuit **(007)**	$ 1423

ACCESSORIES

SKU	Description	MSRP
10006920	Tiling flange, 2 x 60 in. (sold separately)	$ 126
10006923	Flexible main hose (9 ft. extension) for air push control air massage - Kit (sold separately)	$ 209
10004306-001	White foam cushion with 2 suction pads (sold separately) Available color: White **(001)**	$ 138
10006887-105	Metal trim kit for Whirlpool and combined systems (sold separately) Available colors: Chrome **(084)** and Brushed Nickel **(105)**	$ 728
10006887-084		$ 728
10034250-084	Metal trim kit for Aeroeffect with Air Push Control (sold separately) Available colors: Chrome **(084)** and Brushed Nickel **(105)**	$ 82
10034250-105		$ 82
10022491-004	Cable-operated waste and overflow (16 in. to 22 in.) (sold separately) Available colors: White **(001)**, Bone **(004)**, Chrome **(084)** and Brushed Nickel **(105)**	$ 362

FOOTNOTES

No	Description
1	Components for standard colour units equipped with systems are colour-coordinated. Trim kit and/or air push with metallic finish can be added (additional charge applies). For non-standard colour units, please specify trim kit and/or air push colour (additional charge applies for metallic finishes). Please note that the positioning of the system's control could be in conflict with the door if one was installed on the unit. To insure compatibility, please contact customer service.
2	Please order flexible main hose 10006923 for installation of the blower further than 3 ft from the bathtub. For the Tandem models and the Serenade models (freestanding and drop-in), the blower is always remote and not factory installed so a 9 ft flexible main hose is included. Please note that the positioning of the system's control could be in conflict with the door if one was installed on the unit. To insure compatibility, please contact customer service.
3	The blower is not factory installed (remote). 9 ft flexible main hose included. Please note that the positioning of the system's control could be in conflict with the door if one was installed on the unit. To insure compatibility, please contact customer service.
4	For details on pump position and requirements, see technical drawings on https://www.maax.com. When there is a pump position A or B indicated on the technical drawing, please specify position when ordering.
5	For details on blower position and requirements, see technical drawings on https://www.maax.com. When there is a blower position A or B indicated on the technical drawing, please specify position when ordering.
54	A selection of units come with an access panel by default when equipped with a system. However, if the unit is only equipped with chromatherapy, the access panel will not be provided by default.

WHIRLPOOL SYSTEM

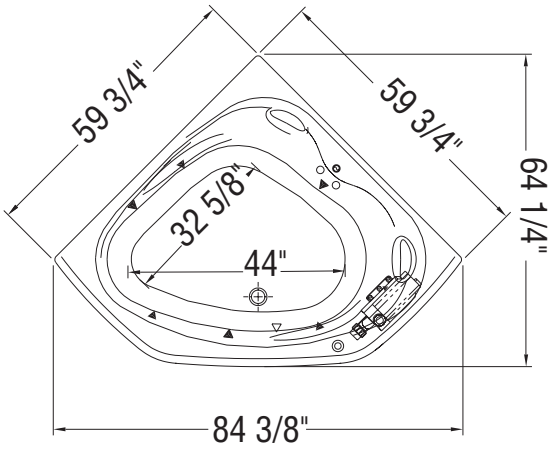

AIR SYSTEM

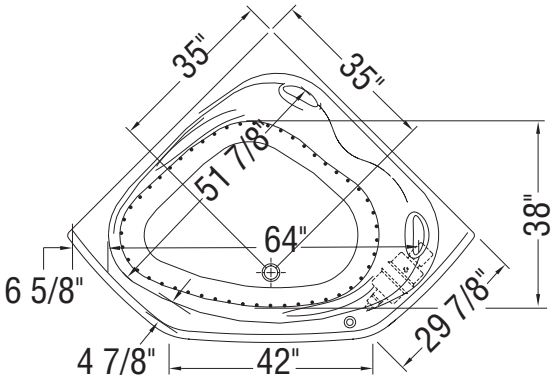

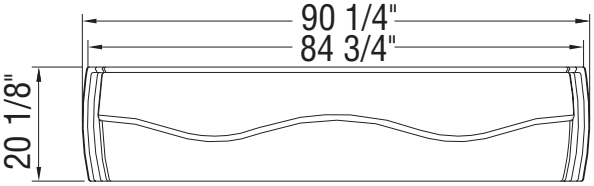

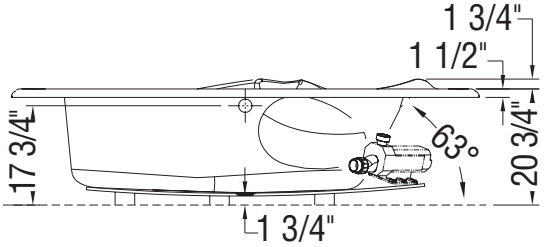

(▲) : Indicates Whirlpool jets positioning
(•) : Indicates airjets positioning
(△) : Indicates suction positioning

All dimensions are approximate. Structure measurements must be verified against the unit to ensure proper fit.

Go to Table of Contents

VO5050 5 ft

Material : AcrylX

Features

- Bathtub with vertical back splash
- Integrated apron
- Integrated tiling flange
- Centre drain
- Corner installation

VO5050 5 FT - 140111

SKU	System	Color	Configuration	Dimensions & Weight	Packaging	MSRP
140111-000-002-000	Soaker - No System	White	Center Drain	51 1/2” x 51 1/2” x 17 1/2” / 90 lb	44 ft^3	$ 1779
140111-001-002-000	Whirlpool [1] [4]					$ 3566

COMMON OPTIONS

SKU	Description	MSRP
OPT10053	One chromatherapy light (factory installed) [54]	$ 790
OPT10095	Water heater assembly for whirlpool and combined systems (factory installed)	$ 1033
OPT10106-084	Metal trim kit for whirlpool and combined systems (factory installed) Available colors: Chrome **(084)** and Brushed Nickel **(105)**	$ 728
OPT10106-105		$ 728
OPT20137-004	Cable-operated waste and overflow (16 in. to 22 in.) (included in product packaging when purchased) Available colors: White **(001)**, Bone **(004)**, Chrome **(084)** and Brushed Nickel **(105)**	$ 362
OPT20137-084		$ 362
OPT20137-105		$ 362
OPT20137-001		$ 362

ACCESSORIES

SKU	Description	MSRP
10004306-001	White foam cushion with 2 suction pads (sold separately) Available color: White **(001)**	$ 138
10006887-105	Metal trim kit for Whirlpool and combined systems (sold separately) Available colors: Chrome **(084)** and Brushed Nickel **(105)**	$ 728
10006887-084		$ 728
10022491-004	Cable-operated waste and overflow (16 in. to 22 in.) (sold separately) Available colors: White **(001)**, Bone **(004)**, Chrome **(084)** and Brushed Nickel **(105)**	$ 362

FOOTNOTES

No	Description
1	Components for standard colour units equipped with systems are colour-coordinated. Trim kit and/or air push with metallic finish can be added (additional charge applies). For non-standard colour units, please specify trim kit and/or air push colour (additional charge applies for metallic finishes). Please note that the positioning of the system’s control could be in conflict with the door if one was installed on the unit. To insure compatibility, please contact customer service.
4	For details on pump position and requirements, see technical drawings on https://www.maax.com. When there is a pump position A or B indicated on the technical drawing, please specify position when ordering.
54	A selection of units come with an access panel by default when equipped with a system. However, if the unit is only equipped with chromatherapy, the access panel will not be provided by default.

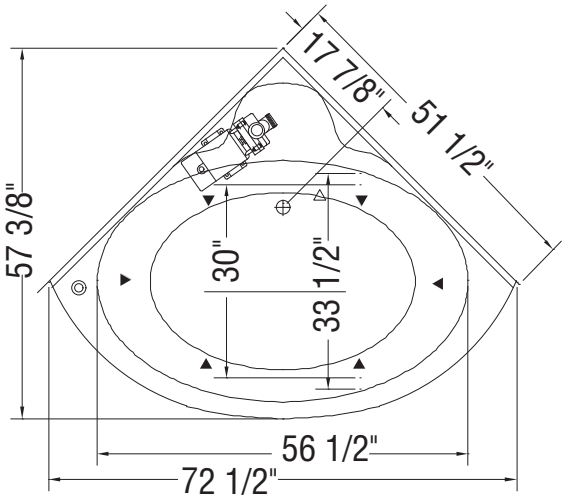

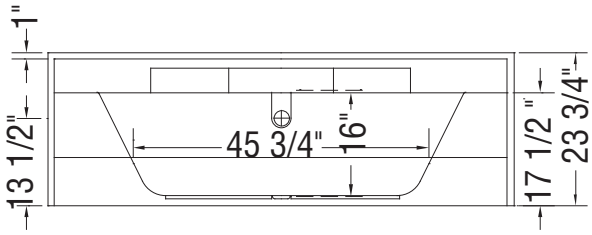

(▲) : Indicates Whirlpool jets positioning
(△) : Indicates suction positioning

All dimensions are approximate. Structure measurements must be verified against the unit to ensure proper fit.

Tub Showers

AlliaTS 6034 – Incognito-Matte Black

Allia Access TS-6032 (1-Piece)

Material : Acrylic

Features

- Textured bottom provides slip-resistance and added safety during use
- Low deck height of 16 in. for an easy access
- Above-the-floor rough (AFR) to allow for easy plumbing installation without having to relocate the existing drain
- Built-in shelves provide generous storage space, making it easy to keep bathing essentials organized
- Stabili-T anti-slip bottom meeting ADA, ANSI and CSA requirements
- Optional grab bars available to adapt to any special needs
- 1-piece tub shower allowing an easy installation
- Acrylic surface resistant to stains
- Timeless design only offered in white

ALLIA ACCESS TS-6032 AFR (1-PIECE) - 107009

SKU	System	Color	Configuration	Dimensions & Weight	Packaging	MSRP
107009-000-001-001		White	Left Drain	60” x 32” x 79” / 173 lb	93 ft³	$ 2505
107009-000-001-002			Right Drain			$ 2505

ALLIA ACCESS TS-6032 AFR (2-PIECE) - 107009S

SKU	System	Color	Configuration	Dimensions & Weight	Packaging	MSRP
107009-000-001-004		White	Left Drain	60” x 32 1/2” x 79” / 173 lb	93 ft³	$ 2938
107009-000-001-005			Right Drain			$ 2938

COMMON OPTIONS

SKU	Description	MSRP
OPT20203-B-002	18 in. Modern straight grab bar [30] **OPT 20203-B-XXX Horizontal grab bar on back wall** Available colours: White **(002)**, Chrome **(084)** and Brushed Nickel **(105)**	$ 283
OPT20203-B-105		$ 283
OPT20203-B-084		$ 283
OPT20203-L-105	18 in. Modern straight grab bar [30] **OPT 20203-L-XXX Vertical grab bar on left wall** Available colours: White **(002)**, Chrome **(084)** and Brushed Nickel **(105)**	$ 283
OPT20203-L-002		$ 283
OPT20203-L-084		$ 283
OPT20203-R-084	18 in. Modern straight grab bar [30] **OPT 20203-R-XXX Vertical grab bar on right wall** Available colours: White **(002)**, Chrome **(084)** and Brushed Nickel **(105)**	$ 283
OPT20203-R-002		$ 283
OPT20203-R-105		$ 283
OPT20204-B-002	24 in. Modern straight grab bar [30] **OPT 20204-B-XXX Horizontal grab bar on back wall** Available colours: White **(002)**, Chrome **(084)** and Brushed Nickel **(105)**	$ 331
OPT20204-B-084		$ 331
OPT20204-B-105		$ 331
OPT20204-L-084	24 in. Modern straight grab bar [30] **OPT 20204-L-XXX Vertical grab bar on left wall** Available colours: White **(002)**, Chrome **(084)** and Brushed Nickel **(105)**	$ 331
OPT20204-L-105		$ 331
OPT20204-L-002		$ 331
OPT20204-R-002	24 in. Modern straight grab bar [30] **OPT 20204-R-XXX Vertical grab bar on right wall** Available colours: White **(002)**, Chrome **(084)** and Brushed Nickel **(105)**	$ 331
OPT20204-R-084		$ 331
OPT20204-R-105		$ 331
OPT20212-B	Back Wall reinforcement for future grab installation [33]	$ 105
OPT20212-L	Left Wall reinforcement for future grab installation [33]	$ 105
OPT20212-R	Right Wall reinforcement for future grab installation [33]	$ 105

COMMON OPTIONS

SKU	Description	MSRP
OPT20216-B-002	30 in. Modern straight grab bar [30] **OPT 20216-B-XXX Horizontal grab bar on back wall** Available colours: White **(002)**, Chrome **(084)** and Brushed Nickel **(105)**	$ 378
OPT20216-B-105		$ 378
OPT20216-B-084		$ 378
OPT20216-L-002	30 in. Modern straight grab bar [30] **OPT 20216-L-XXX Vertical grab bar on left wall** Available colours: White **(002)**, Chrome **(084)** and Brushed Nickel **(105)**	$ 392
OPT20216-L-105		$ 392
OPT20216-L-084		$ 392
OPT20216-R-002	30 in. Modern straight grab bar [30] **OPT 20216-R-XXX Vertical grab bar on right wall** Available colours: White **(002)**, Chrome **(084)** and Brushed Nickel **(105)**	$ 392
OPT20216-R-105		$ 392
OPT20216-R-084		$ 392
OPT20219-L-084	Pivot grab bar (back wall) [3032] **OPT 20219-L-XXX Left-hand pivot grab bar on back wall** Available colours: Chrome **(084)**	$ 2030
OPT20219-R-084	Pivot grab bar (back wall) [3032] **OPT 20219-R-XXX Right-hand pivot grab bar on back wall** Available colours: Chrome **(084)**	$ 2030
OPT20217-L-105	32 in. Curved grab bar (back wall) [3031] **OPT 20217-L-XXX Left-hand curved grab bar on back wall** Available colours: White **(002)**, Chrome **(084)** and Brushed Nickel **(105)**	$ 584
OPT20217-L-002		$ 584
OPT20217-L-084		$ 584
OPT20217-R-002	32 in. Curved grab bar (back wall) [3031] **OPT 20217-R-XXX Right-hand curved grab bar on back wall** Available colours: White **(002)**, Chrome **(084)** and Brushed Nickel **(105)**	$ 584
OPT20217-R-105		$ 584
OPT20217-R-084		$ 584
OPT10189	Three-wall reinforcement for future grab bar installation [33]	$ 305
OPT20056-106	60 in. curtain rod with installation kit Available color: Stainless Steel **(106)**	$ 248
OPT20137-004	Cable-operated waste and overflow (16 in. to 22 in.) (included in product packaging when purchased) Available colors: White **(001)**, Bone **(004)**, Chrome **(084)** and Brushed Nickel **(105)**	$ 362
OPT20137-084		$ 362
OPT20137-105		$ 362
OPT20137-001		$ 362

ACCESSORIES

SKU	Description	MSRP
10004306-001	White foam cushion with 2 suction pads (sold separately) Available color: White **(001)**	$ 138
10028765-105	24 in. modern straight grab bar [36] Specify color: White **(002)**, Chrome **(084)**, Brushed Nickel **(105)**	$ 315
10028765-084		$ 315
10028765-002		$ 315
10029248-105	30 in. Modern straight grab bar [36] Specify color: White **(002)**, Chrome **(084)**, Brushed Nickel **(105)**	$ 359
10029248-002		$ 359
10029248-084		$ 359
10029253-002	32 in. Left hand curved grab bar [36] Left refers to the upper section of the curved bar Specify color: White **(002)**, Chrome **(084)**, Brushed Nickel **(105)**	$ 536
10029253-084		$ 536
10029253-105		$ 536
10029254-084	32 in. Right hand curved grab bar [36] Right refers to the upper section of the curved bar Specify color: White **(002)**, Chrome **(084)**, Brushed Nickel **(105)**	$ 536
10029254-002		$ 536
10029254-105		$ 536
10029996-084	18 in. modern straight grab bar with flange (front installation) Specify colour: White **(002)**, Chrome **(084)**, Brushed Nickel **(105)**	$ 331
10029996-002		$ 331
10029996-105		$ 331
10029997-002	24 in. modern straight grab bar with flange (front installation) Specify color: White **(002)**, Chrome **(084)**, Brushed Nickel **(105)**	$ 378
10029997-105		$ 378
10029997-084		$ 378
10029998-084	30 in. modern straight grab bar with flange (front installation) Specify colour: White **(002)**, Chrome **(084)**, Brushed Nickel **(105)**	$ 403
10029998-002		$ 403
10029998-105		$ 403
10030095-002	32 in. curved left-hand grab bar with flange (front installation) Specify colour: White **(002)**, Chrome **(084)**, Brushed Nickel **(105)**	$ 581

ACCESSORIES

SKU	Description	MSRP
10030095-084	32 in. curved left-hand grab bar with flange (front installation) Specify colour: White **(002)**, Chrome **(084)**, Brushed Nickel **(105)**	$ 581
10030095-105		$ 581
10030097-084	32 in. curved right-hand grab bar with flange (front installation) Specify colour: White **(002)**, Chrome **(084)**, Brushed Nickel **(105)**	$ 581
10030097-002		$ 581
10030097-105		$ 581
10022491-004	Cable-operated waste and overflow (16 in. to 22 in.) (sold separately) Available colors: White **(001)**, Bone **(004)**, Chrome **(084)** and Brushed Nickel **(105)**	$ 362

FOOTNOTES

No	Description
30	Please see technical drawings on https://www.maax.com for grab bar and/or seat positioning.
31	Right (R)/Left (L) refers to the upper section of the ergonomic grab bar.
32	Right/Left refers to the pivot direction of the bar (from closed to open position).
33	Please see technical drawings on https://www.maax.com for reinforcement positioning and size.
36	Rear access grab bar installation. Must be secured onto unit prior to alcove unit insert.
36	
36	

RECOMMENDED DOORS - VISIT OUR WEBSITE FOR A COMPLETE LIST OF RECOMMENDED DOORS

SKU	Product Name	Pag.
138522	Incognito 57 51-54 x 56 3/4 in. 8mm	1009
134560	Kameleon 51-55 x 57 - 6mm	1001
134660	Kameleon SC 51-55 x 57 - 6mm	993

STANDARD
(Left shown)

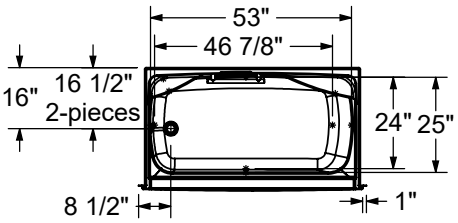

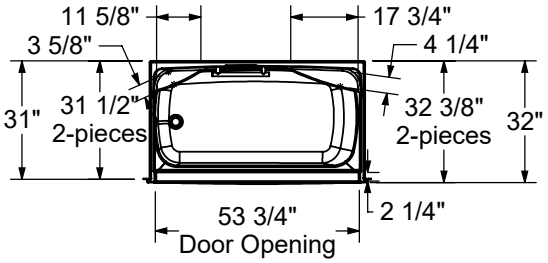

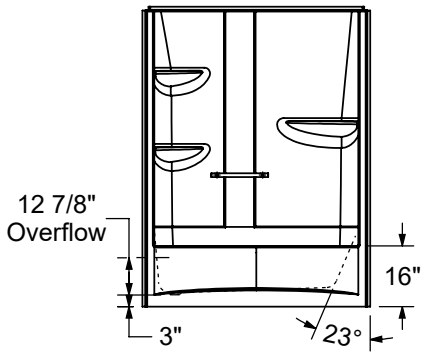

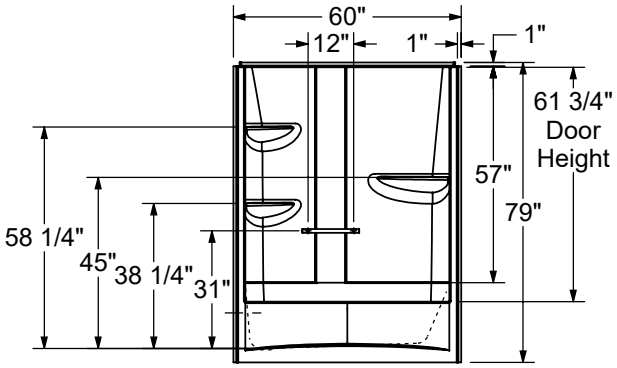

All dimensions are approximate. Structure measurements must be verified against the unit to ensure proper fit.

Allia Access TSR-6032 (1-Piece)

Material : Acrylic

Features

- Textured bottom provides slip-resistance and added safety during use
- Low deck height of 16 in. for an easy access
- Above-the-floor rough (AFR) to allow for easy plumbing installation without having to relocate the existing drain
- Built-in shelves provide generous storage space, making it easy to keep bathing essentials organized
- Stabili-T anti-slip bottom meeting ADA, ANSI and CSA requirements
- Optional grab bars available to adapt to any special needs
- 1-piece tub shower with integrated roofcap allowing an easy installation
- Acrylic surface resistant to stains
- Timeless design only offered in white

ALLIA ACCESS TSR-6032 AFR (1-PIECE) - 107008

SKU	System	Color	Configuration	Dimensions & Weight	Packaging	MSRP
107008-000-001-001		White	Left Drain	60” x 32” x 88” / 155 lb	103 ft³	$ 2871
107008-000-001-002			Right Drain			$ 2871

- 107008S

SKU	System	Color	Configuration	Dimensions & Weight	Packaging	MSRP
107008-000-001-004		White	Left Drain	60” x 32 1/2” x 88” / 155 lb	103 ft³	$ 3097
107008-000-001-005			Right Drain			$ 3097

COMMON OPTIONS

SKU	Description	MSRP
OPT20203-B-002	18 in. Modern straight grab bar [30] **OPT 20203-B-XXX Horizontal grab bar on back wall** Available colours: White **(002)**, Chrome **(084)** and Brushed Nickel **(105)**	$ 283
OPT20203-B-105		$ 283
OPT20203-B-084		$ 283
OPT20203-L-105	18 in. Modern straight grab bar [30] **OPT 20203-L-XXX Vertical grab bar on left wall** Available colours: White **(002)**, Chrome **(084)** and Brushed Nickel **(105)**	$ 283
OPT20203-L-002		$ 283
OPT20203-L-084		$ 283
OPT20203-R-084	18 in. Modern straight grab bar [30] **OPT 20203-R-XXX Vertical grab bar on right wall** Available colours: White **(002)**, Chrome **(084)** and Brushed Nickel **(105)**	$ 283
OPT20203-R-002		$ 283
OPT20203-R-105		$ 283
OPT20204-B-002	24 in. Modern straight grab bar [30] **OPT 20204-B-XXX Horizontal grab bar on back wall** Available colours: White **(002)**, Chrome **(084)** and Brushed Nickel **(105)**	$ 331
OPT20204-B-084		$ 331
OPT20204-B-105		$ 331
OPT20204-L-084	24 in. Modern straight grab bar [30] **OPT 20204-L-XXX Vertical grab bar on left wall** Available colours: White **(002)**, Chrome **(084)** and Brushed Nickel **(105)**	$ 331
OPT20204-L-105		$ 331
OPT20204-L-002		$ 331
OPT20204-R-002	24 in. Modern straight grab bar [30] **OPT 20204-R-XXX Vertical grab bar on right wall** Available colours: White **(002)**, Chrome **(084)** and Brushed Nickel **(105)**	$ 331
OPT20204-R-084		$ 331
OPT20204-R-105		$ 331
OPT20212-B	Back Wall reinforcement for future grab installation [33]	$ 105
OPT20212-L	Left Wall reinforcement for future grab installation [33]	$ 105
OPT20212-R	Right Wall reinforcement for future grab installation [33]	$ 105

COMMON OPTIONS

SKU	Description	MSRP
OPT20216-B-002	30 in. Modern straight grab bar [30] **OPT 20216-B-XXX Horizontal grab bar on back wall** Available colours: White **(002)**, Chrome **(084)** and Brushed Nickel **(105)**	$ 378
OPT20216-B-105		$ 378
OPT20216-B-084		$ 378
OPT20216-L-002	30 in. Modern straight grab bar [30] **OPT 20216-L-XXX Vertical grab bar on left wall** Available colours: White **(002)**, Chrome **(084)** and Brushed Nickel **(105)**	$ 392
OPT20216-L-105		$ 392
OPT20216-L-084		$ 392
OPT20216-R-002	30 in. Modern straight grab bar [30] **OPT 20216-R-XXX Vertical grab bar on right wall** Available colours: White **(002)**, Chrome **(084)** and Brushed Nickel **(105)**	$ 392
OPT20216-R-105		$ 392
OPT20216-R-084		$ 392
OPT20219-L-084	Pivot grab bar (back wall) [3032] **OPT 20219-L-XXX Left-hand pivot grab bar on back wall** Available colours: Chrome **(084)**	$ 2030
OPT20219-R-084	Pivot grab bar (back wall) [3032] **OPT 20219-R-XXX Right-hand pivot grab bar on back wall** Available colours: Chrome **(084)**	$ 2030
OPT20217-L-105	32 in. Curved grab bar (back wall) [3031] **OPT 20217-L-XXX Left-hand curved grab bar on back wall** Available colours: White **(002)**, Chrome **(084)** and Brushed Nickel **(105)**	$ 584
OPT20217-L-002		$ 584
OPT20217-L-084		$ 584
OPT20217-R-002	32 in. Curved grab bar (back wall) [3031] **OPT 20217-R-XXX Right-hand curved grab bar on back wall** Available colours: White **(002)**, Chrome **(084)** and Brushed Nickel **(105)**	$ 584
OPT20217-R-105		$ 584
OPT20217-R-084		$ 584
OPT10189	Three-wall reinforcement for future grab bar installation [33]	$ 305
OPT20056-106	60 in. curtain rod with installation kit Available color: Stainless Steel **(106)**	$ 248
OPT20137-004	Cable-operated waste and overflow (16 in. to 22 in.) (included in product packaging when purchased) Available colors: White **(001)**, Bone **(004)**, Chrome **(084)** and Brushed Nickel **(105)**	$ 362
OPT20137-084		$ 362
OPT20137-105		$ 362
OPT20137-001		$ 362

ACCESSORIES

SKU	Description	MSRP
10004306-001	White foam cushion with 2 suction pads (sold separately) Available color: White **(001)**	$ 138
10028765-105	24 in. modern straight grab bar [36] Specify color: White **(002)**, Chrome **(084)**, Brushed Nickel **(105)**	$ 315
10028765-084		$ 315
10028765-002		$ 315
10029248-105	30 in. Modern straight grab bar [36] Specify color: White **(002)**, Chrome **(084)**, Brushed Nickel **(105)**	$ 359
10029248-002		$ 359
10029248-084		$ 359
10029253-002	32 in. Left hand curved grab bar [36] Left refers to the upper section of the curved bar Specify color: White **(002)**, Chrome **(084)**, Brushed Nickel **(105)**	$ 536
10029253-084		$ 536
10029253-105		$ 536
10029254-084	32 in. Right hand curved grab bar [36] Right refers to the upper section of the curved bar Specify color: White **(002)**, Chrome **(084)**, Brushed Nickel **(105)**	$ 536
10029254-002		$ 536
10029254-105		$ 536
10029996-084	18 in. modern straight grab bar with flange (front installation) Specify colour: White **(002)**, Chrome **(084)**, Brushed Nickel **(105)**	$ 331
10029996-002		$ 331
10029996-105		$ 331
10029997-002	24 in. modern straight grab bar with flange (front installation) Specify color: White **(002)**, Chrome **(084)**, Brushed Nickel **(105)**	$ 378
10029997-105		$ 378
10029997-084		$ 378
10029998-084	30 in. modern straight grab bar with flange (front installation) Specify colour: White **(002)**, Chrome **(084)**, Brushed Nickel **(105)**	$ 403
10029998-002		$ 403
10029998-105		$ 403
10030095-002	32 in. curved left-hand grab bar with flange (front installation) Specify colour: White **(002)**, Chrome **(084)**, Brushed Nickel **(105)**	$ 581

ACCESSORIES

SKU	Description	MSRP
10030095-084	32 in. curved left-hand grab bar with flange (front installation) Specify colour: White **(002)**, Chrome **(084)**, Brushed Nickel **(105)**	$ 581
10030095-105		$ 581
10030097-084	32 in. curved right-hand grab bar with flange (front installation) Specify colour: White **(002)**, Chrome **(084)**, Brushed Nickel **(105)**	$ 581
10030097-002		$ 581
10030097-105		$ 581
10022491-004	Cable-operated waste and overflow (16 in. to 22 in.) (sold separately) Available colors: White **(001)**, Bone **(004)**, Chrome **(084)** and Brushed Nickel **(105)**	$ 362

FOOTNOTES

No	Description
30	Please see technical drawings on https://www.maax.com for grab bar and/or seat positioning.
31	Right (R)/Left (L) refers to the upper section of the ergonomic grab bar.
32	Right/Left refers to the pivot direction of the bar (from closed to open position).
33	Please see technical drawings on https://www.maax.com for reinforcement positioning and size.
36	Rear access grab bar installation. Must be secured onto unit prior to alcove unit insert.
36	
36	

RECOMMENDED DOORS - VISIT OUR WEBSITE FOR A COMPLETE LIST OF RECOMMENDED DOORS

SKU	Product Name	Pag.
138522	Incognito 57 51-54 x 56 3/4 in. 8mm	1009
134560	Kameleon 51-55 x 57 - 6mm	1001
134660	Kameleon SC 51-55 x 57 - 6mm	993

STANDARD
(Left shown)

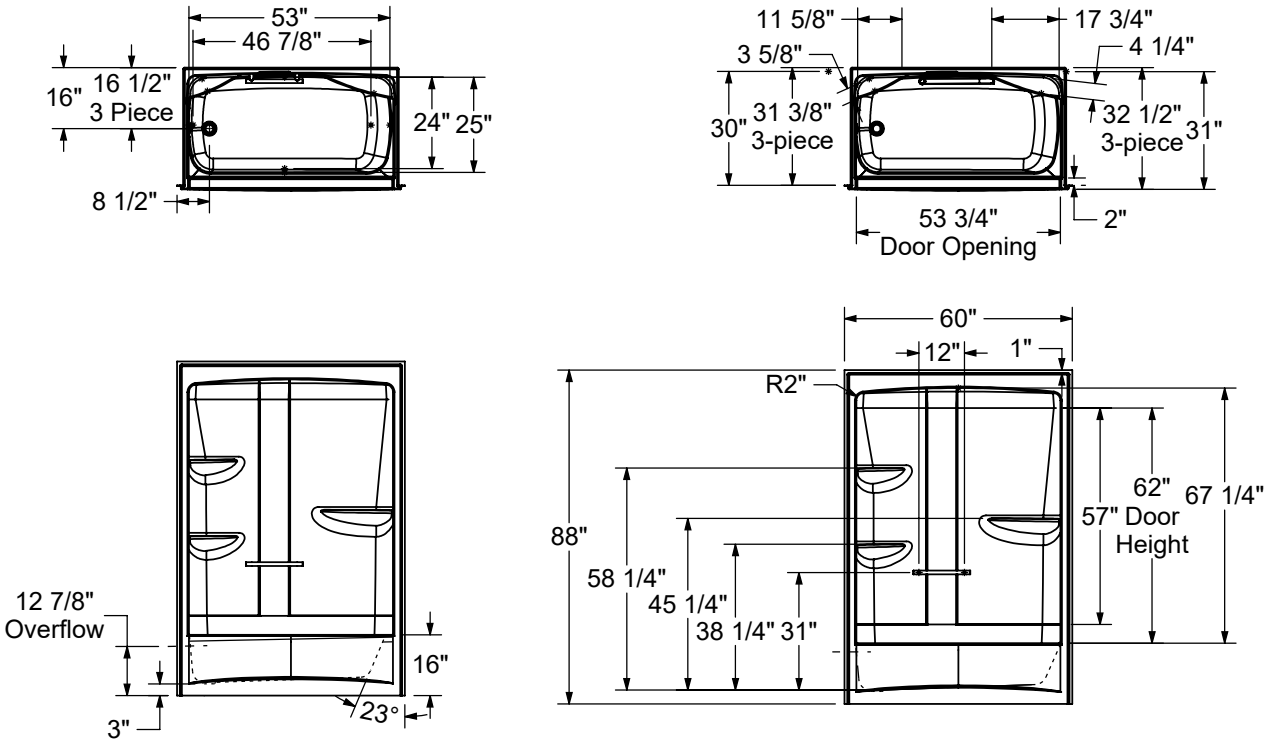

All dimensions are approximate. Structure measurements must be verified against the unit to ensure proper fit.

Allia TS-6032 (1-piece)

Material : Acrylic

Min: 32 Gal / 144 L
Max: 41 Gal / 185 L

Features

- 1-Piece construction for reliable water containement
- Available in left-hand and right-hand drain configurations to fit your specific bathroom layout
- Textured bottom for added safety
- Above-the-floor rough (AFR) to allow for easy plumbing installation without having to relocate the existing drain
- Built-in shelves provide generous storage space, making it easy to keep bathing essentials organized
- Includes a 12 in. white grab bar
- Multiple options to add a grab bar, which is installed on the back wall and replaces the standard bar
- Also available with a Whirlpool, Aeroeffect and Combined Whirlpool / Aeroeffect
- Hygienic, non-porous acrylic surface for easy cleaning

ALLIA TS-6032 AFR (1 PIECE) - 107001

SKU	System	Color	Configuration	Dimensions & Weight	Packaging	MSRP
107001-000-001-001	Soaker - No System	White	Left Drain	60” x 32” x 78” / 141.68 lb	91.21 ft^3	$ 2505
107001-000-001-002			Right Drain			$ 2505
107001-001-001-001	Whirlpool [1 4]		Left Drain			$ 4292
107001-001-001-002			Right Drain			$ 4292
107001-096-001-001	Combined Whirlpool & Aeroeffect [1 3]		Left Drain			$ 6817
107001-096-001-002			Right Drain			$ 6817
107001-103-001-001	Aeroeffect [1 2 5]		Left Drain			$ 5518
107001-103-001-002			Right Drain			$ 5518

ALLIA TS-6032 AFR (2-PIECE) - 107001S

SKU	System	Color	Configuration	Dimensions & Weight	Packaging	MSRP
107001-000-001-004	Soaker - No System	White	Left Drain	60” x 32 1/2” x 78” / 141.68 lb	92.62 ft^3	$ 2938
107001-000-001-005			Right Drain			$ 2938
107001-001-001-004	Whirlpool [1 4]		Left Drain			$ 4725
107001-001-001-005			Right Drain			$ 4725
107001-096-001-004	Combined Whirlpool & Aeroeffect [1 3]		Left Drain			$ 7250
107001-096-001-005			Right Drain			$ 7250
107001-103-001-004	Aeroeffect [1 2 5]		Left Drain			$ 5951
107001-103-001-005			Right Drain			$ 5951

COMMON OPTIONS

SKU	Description	MSRP
OPT20203-B-002	18 in. Modern straight grab bar [30] **OPT 20203-B-XXX Horizontal grab bar on back wall** Available colours: White **(002)**, Chrome **(084)** and Brushed Nickel **(105)**	$ 283
OPT20203-B-105		$ 283
OPT20203-B-084		$ 283
OPT20203-L-105	18 in. Modern straight grab bar [30] **OPT 20203-L-XXX Vertical grab bar on left wall** Available colours: White **(002)**, Chrome **(084)** and Brushed Nickel **(105)**	$ 283

COMMON OPTIONS

SKU	Description	MSRP
OPT20203-L-002	18 in. Modern straight grab bar [30] **OPT 20203-L-XXX Vertical grab bar on left wall** Available colours: White **(002)**, Chrome **(084)** and Brushed Nickel **(105)**	$ 283
OPT20203-L-084		$ 283
OPT20203-R-084	18 in. Modern straight grab bar [30] **OPT 20203-R-XXX Vertical grab bar on right wall** Available colours: White **(002)**, Chrome **(084)** and Brushed Nickel **(105)**	$ 283
OPT20203-R-002		$ 283
OPT20203-R-105		$ 283
OPT20204-B-002	24 in. Modern straight grab bar [30] **OPT 20204-B-XXX Horizontal grab bar on back wall** Available colours: White **(002)**, Chrome **(084)** and Brushed Nickel **(105)**	$ 331
OPT20204-B-084		$ 331
OPT20204-B-105		$ 331
OPT20204-L-084	24 in. Modern straight grab bar [30] **OPT 20204-L-XXX Vertical grab bar on left wall** Available colours: White **(002)**, Chrome **(084)** and Brushed Nickel **(105)**	$ 331
OPT20204-L-105		$ 331
OPT20204-L-002		$ 331
OPT20204-R-002	24 in. Modern straight grab bar [30] **OPT 20204-R-XXX Vertical grab bar on right wall** Available colours: White **(002)**, Chrome **(084)** and Brushed Nickel **(105)**	$ 331
OPT20204-R-084		$ 331
OPT20204-R-105		$ 331
OPT20212-B	Back Wall reinforcement for future grab installation [33]	$ 105
OPT20212-L	Left Wall reinforcement for future grab installation [33]	$ 105
OPT20212-R	Right Wall reinforcement for future grab installation [33]	$ 105
OPT20216-B-002	30 in. Modern straight grab bar [30] **OPT 20216-B-XXX Horizontal grab bar on back wall** Available colours: White **(002)**, Chrome **(084)** and Brushed Nickel **(105)**	$ 378
OPT20216-B-105		$ 378
OPT20216-B-084		$ 378
OPT20216-L-002	30 in. Modern straight grab bar [30] **OPT 20216-L-XXX Vertical grab bar on left wall** Available colours: White **(002)**, Chrome **(084)** and Brushed Nickel **(105)**	$ 392
OPT20216-L-105		$ 392
OPT20216-L-084		$ 392
OPT20216-R-002	30 in. Modern straight grab bar [30] **OPT 20216-R-XXX Vertical grab bar on right wall** Available colours: White **(002)**, Chrome **(084)** and Brushed Nickel **(105)**	$ 392
OPT20216-R-105		$ 392
OPT20216-R-084		$ 392
OPT20219-L-084	Pivot grab bar (back wall) [3032] **OPT 20219-L-XXX Left-hand pivot grab bar on back wall** Available colours: Chrome **(084)**	$ 2030
OPT20219-R-084	Pivot grab bar (back wall) [3032] **OPT 20219-R-XXX Right-hand pivot grab bar on back wall** Available colours: Chrome **(084)**	$ 2030
OPT20400-L-084	Package A [30] **OPT 20400-L-XXX Vertical grab bar on left wall, horizontal grab bar on back wall** Package includes : • 24 in. Vertical grab bar on side wall • 30 in. Horizontal grab bar on back wall Available colors: White **(002)**, Chrome **(084)** and Brushed Nickel **(105)**	$ 529
OPT20400-L-105		$ 529
OPT20400-L-002		$ 529
OPT20400-R-002	Package A [30] **OPT 20400-R-XXX Vertical grab bar on right wall, horizontal grab bar on back wall** Package includes : • 24 in. Vertical grab bar on side wall • 30 in. Horizontal grab bar on back wall Available colors: White **(002)**, Chrome **(084)** and Brushed Nickel **(105)**	$ 529
OPT20400-R-084		$ 529
OPT20400-R-105		$ 529
OPT20401-L-084	Package B [30], [31] **OPT 20401-L-XXX Vertical grab bar on left wall, left-hand curved grab bar on back wall** Package includes : • 24 in. Vertical grab bar on side wall • 32 in. Horizontal grab bar on back wall Available colors: White **(002)**, Chrome **(084)** and Brushed Nickel **(105)**	$ 721
OPT20401-L-105		$ 721
OPT20401-L-002		$ 721
OPT20401-R-084	Package B [30], [31] **OPT 20401-R-XXX Vertical grab bar on right wall, right-hand curved grab bar on back wall** Package includes : • 24 in. Vertical grab bar on side wall • 32 in. Horizontal grab bar on back wall Available colors: White **(002)**, Chrome **(084)** and Brushed Nickel **(105)**	$ 721
OPT20401-R-105		$ 721
OPT20401-R-002		$ 721
OPT20402-L-084	Package C [30], [32] **OPT 20402-L-XXX 2 x Vertical grab bars on side walls, left-hand pivot grab bar on back wall** Package includes : • 2 x 24 in. Vertical grab bar on side walls • Pivot grab bar on back walll Available colors: Chrome **(084)** and Brushed Nickel **(105)**	$ 2409

COMMON OPTIONS

SKU	Description	MSRP
OPT20402-R-084	Package C [30], [32] **OPT 20402-R-XXX 2 x Vertical grab bars on side walls, right-hand pivot grab bar on back wall** Package includes : • 2 x 24 in. Vertical grab bar on side walls • Pivot grab bar on back walll Available colors: Chrome **(084)** and Brushed Nickel **(105)**	$ 2409
OPT20217-L-105	32 in. Curved grab bar (back wall) [3031] **OPT 20217-L-XXX Left-hand curved grab bar on back wall** Available colours: White **(002)**, Chrome **(084)** and Brushed Nickel **(105)**	$ 584
OPT20217-L-002		$ 584
OPT20217-L-084		$ 584
OPT20217-R-002	32 in. Curved grab bar (back wall) [3031] **OPT 20217-R-XXX Right-hand curved grab bar on back wall** Available colours: White **(002)**, Chrome **(084)** and Brushed Nickel **(105)**	$ 584
OPT20217-R-105		$ 584
OPT20217-R-084		$ 584
OPT10053	One chromatherapy light (factory installed) [54]	$ 790
OPT10095	Water heater assembly for whirlpool and combined systems (factory installed)	$ 1033
OPT10189	Three-wall reinforcement for future grab bar installation [33]	$ 305
OPT10106-084	Metal trim kit for whirlpool and combined systems (factory installed) Available colors: Chrome **(084)** and Brushed Nickel **(105)**	$ 728
OPT10106-105		$ 728
OPT20029-105	Metal trim kit for air push control (factory installed) Available colors: Chrome **(084)** and Brushed Nickel **(105)**	$ 82
OPT20029-084		$ 82
OPT20056-106	60 in. curtain rod with installation kit Available color: Stainless Steel **(106)**	$ 248
OPT20137-004	Cable-operated waste and overflow (16 in. to 22 in.) (included in product packaging when purchased) Available colors: White **(001)**, Bone **(004)**, Chrome **(084)** and Brushed Nickel **(105)**	$ 362
OPT20137-084		$ 362
OPT20137-105		$ 362
OPT20137-001		$ 362

ACCESSORIES

SKU	Description	MSRP
10006923	Flexible main hose (9 ft. extension) for air push control air massage - Kit (sold separately)	$ 209
10004306-001	White foam cushion with 2 suction pads (sold separately) Available color: White **(001)**	$ 138
10006887-105	Metal trim kit for Whirlpool and combined systems (sold separately) Available colors: Chrome **(084)** and Brushed Nickel **(105)**	$ 728
10006887-084		$ 728
10028765-105	24 in. modern straight grab bar [36] Specify color: White **(002)**, Chrome **(084)**, Brushed Nickel **(105)**	$ 315
10028765-084		$ 315
10028765-002		$ 315
10029248-105	30 in. Modern straight grab bar [36] Specify color: White **(002)**, Chrome **(084)**, Brushed Nickel **(105)**	$ 359
10029248-002		$ 359
10029248-084		$ 359
10029253-002	32 in. Left hand curved grab bar [36] Left refers to the upper section of the curved bar Specify color: White **(002)**, Chrome **(084)**, Brushed Nickel **(105)**	$ 536
10029253-084		$ 536
10029253-105		$ 536
10029254-084	32 in. Right hand curved grab bar [36] Right refers to the upper section of the curved bar Specify color: White **(002)**, Chrome **(084)**, Brushed Nickel **(105)**	$ 536
10029254-002		$ 536
10029254-105		$ 536
10029996-084	18 in. modern straight grab bar with flange (front installation) Specify colour: White **(002)**, Chrome **(084)**, Brushed Nickel **(105)**	$ 331
10029996-002		$ 331
10029996-105		$ 331
10029997-002	24 in. modern straight grab bar with flange (front installation) Specify color: White **(002)**, Chrome **(084)**, Brushed Nickel **(105)**	$ 378
10029997-105		$ 378
10029997-084		$ 378
10029998-084	30 in. modern straight grab bar with flange (front installation) Specify colour: White **(002)**, Chrome **(084)**, Brushed Nickel **(105)**	$ 403
10029998-002		$ 403
10029998-105		$ 403
10030095-002	32 in. curved left-hand grab bar with flange (front installation) Specify colour: White **(002)**, Chrome **(084)**, Brushed Nickel **(105)**	$ 581
10030095-084		$ 581

ACCESSORIES

SKU	Description	MSRP
10030095-105	32 in. curved left-hand grab bar with flange (front installation) Specify colour: White **(002)**, Chrome **(084)**, Brushed Nickel **(105)**	$ 581
10030097-084	32 in. curved right-hand grab bar with flange (front installation) Specify colour: White **(002)**, Chrome **(084)**, Brushed Nickel **(105)**	$ 581
10030097-002		$ 581
10030097-105		$ 581
10034250-084	Metal trim kit for Aeroeffect with Air Push Control (sold separately) Available colors: Chrome **(084)** and Brushed Nickel **(105)**	$ 82
10034250-105		$ 82
10022491-004	Cable-operated waste and overflow (16 in. to 22 in.) (sold separately) Available colors: White **(001)**, Bone **(004)**, Chrome **(084)** and Brushed Nickel **(105)**	$ 362

FOOTNOTES

No	Description
1	Components for standard colour units equipped with systems are colour-coordinated. Trim kit and/or air push with metallic finish can be added (additional charge applies). For non-standard colour units, please specify trim kit and/or air push colour (additional charge applies for metallic finishes). Please note that the positioning of the system's control could be in conflict with the door if one was installed on the unit. To insure compatibility, please contact customer service.
2	Please order flexible main hose 10006923 for installation of the blower further than 3 ft from the bathtub. For the Tandem models and the Serenade models (freestanding and drop-in), the blower is always remote and not factory installed so a 9 ft flexible main hose is included. Please note that the positioning of the system's control could be in conflict with the door if one was installed on the unit. To insure compatibility, please contact customer service.
3	The blower is not factory installed (remote). 9 ft flexible main hose included. Please note that the positioning of the system's control could be in conflict with the door if one was installed on the unit. To insure compatibility, please contact customer service.
4	For details on pump position and requirements, see technical drawings on https://www.maax.com. When there is a pump position A or B indicated on the technical drawing, please specify position when ordering.
5	For details on blower position and requirements, see technical drawings on https://www.maax.com. When there is a blower position A or B indicated on the technical drawing, please specify position when ordering.
30	Please see technical drawings on https://www.maax.com for grab bar and/or seat positioning.
31	Right (R)/Left (L) refers to the upper section of the ergonomic grab bar.
32	Right/Left refers to the pivot direction of the bar (from closed to open position).
33	Please see technical drawings on https://www.maax.com for reinforcement positioning and size.
36	Rear access grab bar installation. Must be secured onto unit prior to alcove unit insert.
54	A selection of units come with an access panel by default when equipped with a system. However, if the unit is only equipped with chromatherapy, the access panel will not be provided by default.
36	
36	

RECOMMENDED DOORS - VISIT OUR WEBSITE FOR A COMPLETE LIST OF RECOMMENDED DOORS

SKU	Product Name	Pag.
138522	Incognito 57 51-54 x 56 3/4 in. 8mm	1009
134560	Kameleon 51-55 x 57 - 6mm	1001
134660	Kameleon SC 51-55 x 57 - 6mm	993

STANDARD
(Left shown)
1-PIECE MODEL SHOWN

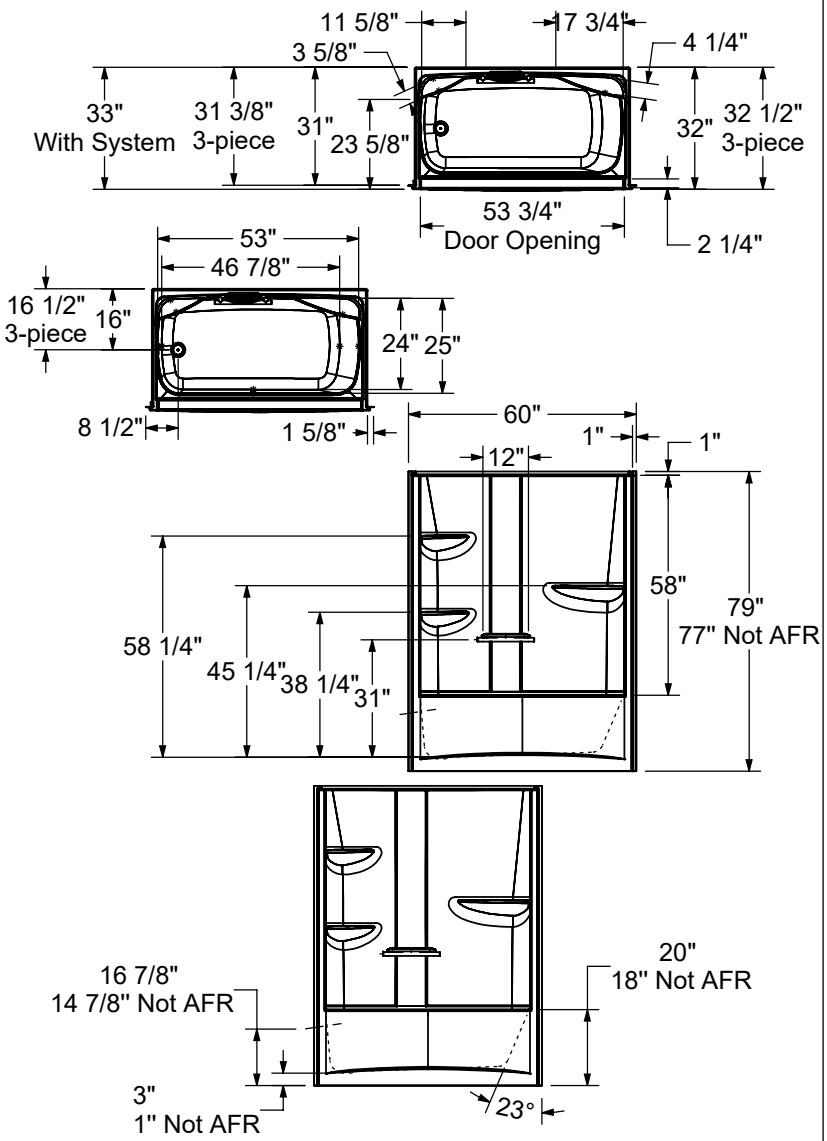

All dimensions are approximate. Structure measurements must be verified against the unit to ensure proper fit.

OPTIONAL REINFORCEMENT
(Left shown)

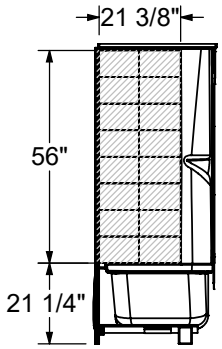

OPTIONAL REINFORCEMENT
(Back Wall)

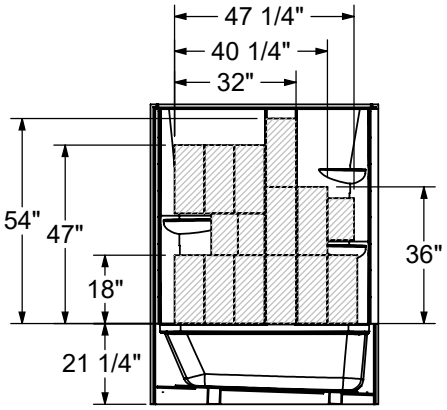

Allia TSR-6032 (1-piece)

Material : Acrylic

Min: 32 Gal / 144 L
Max: 41 Gal / 185 L

Features

- 1-Piece construction for reliable water containement
- Available in left-hand and right-hand drain configurations to fit your specific bathroom layout
- Textured bottom for added safety
- Above-the-floor rough (AFR) to allow for easy plumbing installation without having to relocate the existing drain
- Built-in shelves provide generous storage space, making it easy to keep bathing essentials organized
- Includes a 12 in. white grab bar
- Multiple options to add a grab bar, which is installed on the back wall and replaces the standard bar
- Also available with a Whirlpool, Aeroeffect and Combined Whirlpool / Aeroeffect
- Hygienic, non-porous acrylic surface for easy cleaning

ALLIA TSR-6032 AFR (1 PIECE) - 107000

SKU	System	Color	Configuration	Dimensions & Weight	Packaging	MSRP
107000-000-001-001	Soaker - No System	White	Left Drain	60” x 31” x 87” / 166.86 lb	98.42 ft³	$ 2871
107000-000-001-002			Right Drain			$ 2871
107000-001-001-001	Whirlpool [1 4]		Left Drain			$ 4658
107000-001-001-002			Right Drain			$ 4658
107000-096-001-001	Combined Whirlpool & Aeroeffect [1 3]		Left Drain			$ 7183
107000-096-001-002			Right Drain			$ 7183
107000-103-001-001	Aeroeffect [1 2 5]		Left Drain			$ 5884
107000-103-001-002			Right Drain			$ 5884

ALLIA TSR-6032 AFR (3-PIECE) - 107000S

SKU	System	Color	Configuration	Dimensions & Weight	Packaging	MSRP
107000-000-001-004	Soaker - No System	White	Left Drain	60” x 32 1/2” x 87” / 166.86 lb	103.1 ft³	$ 3097
107000-000-001-005			Right Drain			$ 3097
107000-001-001-004	Whirlpool [1 4]		Left Drain			$ 4884
107000-001-001-005			Right Drain			$ 4884
107000-096-001-004	Combined Whirlpool & Aeroeffect [1 3]		Left Drain			$ 7409
107000-096-001-005			Right Drain			$ 7409
107000-103-001-004	Aeroeffect [1 2 5]		Left Drain			$ 6110
107000-103-001-005			Right Drain			$ 6110

COMMON OPTIONS

SKU	Description	MSRP
OPT20203-B-002	18 in. Modern straight grab bar [30] **OPT 20203-B-XXX Horizontal grab bar on back wall** Available colours: White **(002)**, Chrome **(084)** and Brushed Nickel **(105)**	$ 283
OPT20203-B-105		$ 283
OPT20203-B-084		$ 283
OPT20203-L-105	18 in. Modern straight grab bar [30] **OPT 20203-L-XXX Vertical grab bar on left wall** Available colours: White **(002)**, Chrome **(084)** and Brushed Nickel **(105)**	$ 283

COMMON OPTIONS

SKU	Description	MSRP
OPT20203-L-002	18 in. Modern straight grab bar [30] **OPT 20203-L-XXX Vertical grab bar on left wall** Available colours: White **(002)**, Chrome **(084)** and Brushed Nickel **(105)**	$ 283
OPT20203-L-084		$ 283
OPT20203-R-084	18 in. Modern straight grab bar [30] **OPT 20203-R-XXX Vertical grab bar on right wall** Available colours: White **(002)**, Chrome **(084)** and Brushed Nickel **(105)**	$ 283
OPT20203-R-002		$ 283
OPT20203-R-105		$ 283
OPT20204-B-002	24 in. Modern straight grab bar [30] **OPT 20204-B-XXX Horizontal grab bar on back wall** Available colours: White **(002)**, Chrome **(084)** and Brushed Nickel **(105)**	$ 331
OPT20204-B-084		$ 331
OPT20204-B-105		$ 331
OPT20204-L-084	24 in. Modern straight grab bar [30] **OPT 20204-L-XXX Vertical grab bar on left wall** Available colours: White **(002)**, Chrome **(084)** and Brushed Nickel **(105)**	$ 331
OPT20204-L-105		$ 331
OPT20204-L-002		$ 331
OPT20204-R-002	24 in. Modern straight grab bar [30] **OPT 20204-R-XXX Vertical grab bar on right wall** Available colours: White **(002)**, Chrome **(084)** and Brushed Nickel **(105)**	$ 331
OPT20204-R-084		$ 331
OPT20204-R-105		$ 331
OPT20212-B	Back Wall reinforcement for future grab installation [33]	$ 105
OPT20212-L	Left Wall reinforcement for future grab installation [33]	$ 105
OPT20212-R	Right Wall reinforcement for future grab installation [33]	$ 105
OPT20216-B-002	30 in. Modern straight grab bar [30] **OPT 20216-B-XXX Horizontal grab bar on back wall** Available colours: White **(002)**, Chrome **(084)** and Brushed Nickel **(105)**	$ 378
OPT20216-B-105		$ 378
OPT20216-B-084		$ 378
OPT20216-L-002	30 in. Modern straight grab bar [30] **OPT 20216-L-XXX Vertical grab bar on left wall** Available colours: White **(002)**, Chrome **(084)** and Brushed Nickel **(105)**	$ 392
OPT20216-L-105		$ 392
OPT20216-L-084		$ 392
OPT20216-R-002	30 in. Modern straight grab bar [30] **OPT 20216-R-XXX Vertical grab bar on right wall** Available colours: White **(002)**, Chrome **(084)** and Brushed Nickel **(105)**	$ 392
OPT20216-R-105		$ 392
OPT20216-R-084		$ 392
OPT20219-L-084	Pivot grab bar (back wall) [3032] **OPT 20219-L-XXX Left-hand pivot grab bar on back wall** Available colours: Chrome **(084)**	$ 2030
OPT20219-R-084	Pivot grab bar (back wall) [3032] **OPT 20219-R-XXX Right-hand pivot grab bar on back wall** Available colours: Chrome **(084)**	$ 2030
OPT20400-L-084	Package A [30] **OPT 20400-L-XXX Vertical grab bar on left wall, horizontal grab bar on back wall** Package includes : • 24 in. Vertical grab bar on side wall • 30 in. Horizontal grab bar on back wall Available colors: White **(002)**, Chrome **(084)** and Brushed Nickel **(105)**	$ 529
OPT20400-L-105		$ 529
OPT20400-L-002		$ 529
OPT20400-R-002	Package A [30] **OPT 20400-R-XXX Vertical grab bar on right wall, horizontal grab bar on back wall** Package includes : • 24 in. Vertical grab bar on side wall • 30 in. Horizontal grab bar on back wall Available colors: White **(002)**, Chrome **(084)** and Brushed Nickel **(105)**	$ 529
OPT20400-R-084		$ 529
OPT20400-R-105		$ 529
OPT20401-L-084	Package B [30], [31] **OPT 20401-L-XXX Vertical grab bar on left wall, left-hand curved grab bar on back wall** Package includes : • 24 in. Vertical grab bar on side wall • 32 in. Horizontal grab bar on back wall Available colors: White **(002)**, Chrome **(084)** and Brushed Nickel **(105)**	$ 721
OPT20401-L-105		$ 721
OPT20401-L-002		$ 721
OPT20401-R-084	Package B [30], [31] **OPT 20401-R-XXX Vertical grab bar on right wall, right-hand curved grab bar on back wall** Package includes : • 24 in. Vertical grab bar on side wall • 32 in. Horizontal grab bar on back wall Available colors: White **(002)**, Chrome **(084)** and Brushed Nickel **(105)**	$ 721
OPT20401-R-105		$ 721
OPT20401-R-002		$ 721
OPT20402-L-084	Package C [30], [32] **OPT 20402-L-XXX 2 x Vertical grab bars on side walls, left-hand pivot grab bar on back wall** Package includes : • 2 x 24 in. Vertical grab bar on side walls • Pivot grab bar on back walll Available colors: Chrome **(084)** and Brushed Nickel **(105)**	$ 2409

COMMON OPTIONS

SKU	Description	MSRP
OPT20402-R-084	Package C [30], [32] **OPT 20402-R-XXX 2 x Vertical grab bars on side walls, right-hand pivot grab bar on back wall** Package includes : • 2 x 24 in. Vertical grab bar on side walls • Pivot grab bar on back walll Available colors: Chrome **(084)** and Brushed Nickel **(105)**	$ 2409
OPT20217-L-105	32 in. Curved grab bar (back wall) [3031] **OPT 20217-L-XXX Left-hand curved grab bar on back wall** Available colours: White **(002)**, Chrome **(084)** and Brushed Nickel **(105)**	$ 584
OPT20217-L-002		$ 584
OPT20217-L-084		$ 584
OPT20217-R-002	32 in. Curved grab bar (back wall) [3031] **OPT 20217-R-XXX Right-hand curved grab bar on back wall** Available colours: White **(002)**, Chrome **(084)** and Brushed Nickel **(105)**	$ 584
OPT20217-R-105		$ 584
OPT20217-R-084		$ 584
OPT10053	One chromatherapy light (factory installed) [54]	$ 790
OPT10095	Water heater assembly for whirlpool and combined systems (factory installed)	$ 1033
OPT10189	Three-wall reinforcement for future grab bar installation [33]	$ 305
OPT10106-084	Metal trim kit for whirlpool and combined systems (factory installed) Available colors: Chrome **(084)** and Brushed Nickel **(105)**	$ 728
OPT10106-105		$ 728
OPT20029-105	Metal trim kit for air push control (factory installed) Available colors: Chrome **(084)** and Brushed Nickel **(105)**	$ 82
OPT20029-084		$ 82
OPT20056-106	60 in. curtain rod with installation kit Available color: Stainless Steel **(106)**	$ 248
OPT20137-004	Cable-operated waste and overflow (16 in. to 22 in.) (included in product packaging when purchased) Available colors: White **(001)**, Bone **(004)**, Chrome **(084)** and Brushed Nickel **(105)**	$ 362
OPT20137-084		$ 362
OPT20137-105		$ 362
OPT20137-001		$ 362

ACCESSORIES

SKU	Description	MSRP
10006923	Flexible main hose (9 ft. extension) for air push control air massage - Kit (sold separately)	$ 209
10004306-001	White foam cushion with 2 suction pads (sold separately) Available color: White **(001)**	$ 138
10006887-105	Metal trim kit for Whirlpool and combined systems (sold separately) Available colors: Chrome **(084)** and Brushed Nickel **(105)**	$ 728
10006887-084		$ 728
10028765-105	24 in. modern straight grab bar [36] Specify color: White **(002)**, Chrome **(084)**, Brushed Nickel **(105)**	$ 315
10028765-084		$ 315
10028765-002		$ 315
10029248-105	30 in. Modern straight grab bar [36] Specify color: White **(002)**, Chrome **(084)**, Brushed Nickel **(105)**	$ 359
10029248-002		$ 359
10029248-084		$ 359
10029253-002	32 in. Left hand curved grab bar [36] Left refers to the upper section of the curved bar Specify color: White **(002)**, Chrome **(084)**, Brushed Nickel **(105)**	$ 536
10029253-084		$ 536
10029253-105		$ 536
10029254-084	32 in. Right hand curved grab bar [36] Right refers to the upper section of the curved bar Specify color: White **(002)**, Chrome **(084)**, Brushed Nickel **(105)**	$ 536
10029254-002		$ 536
10029254-105		$ 536
10029996-084	18 in. modern straight grab bar with flange (front installation) Specify colour: White **(002)**, Chrome **(084)**, Brushed Nickel **(105)**	$ 331
10029996-002		$ 331
10029996-105		$ 331
10029997-002	24 in. modern straight grab bar with flange (front installation) Specify color: White **(002)**, Chrome **(084)**, Brushed Nickel **(105)**	$ 378
10029997-105		$ 378
10029997-084		$ 378
10029998-084	30 in. modern straight grab bar with flange (front installation) Specify colour: White **(002)**, Chrome **(084)**, Brushed Nickel **(105)**	$ 403
10029998-002		$ 403
10029998-105		$ 403
10030095-002	32 in. curved left-hand grab bar with flange (front installation) Specify colour: White **(002)**, Chrome **(084)**, Brushed Nickel **(105)**	$ 581
10030095-084		$ 581

ACCESSORIES

SKU	Description	MSRP
10030095-105	32 in. curved left-hand grab bar with flange (front installation) Specify colour: White **(002)**, Chrome **(084)**, Brushed Nickel **(105)**	$ 581
10030097-084	32 in. curved right-hand grab bar with flange (front installation) Specify colour: White **(002)**, Chrome **(084)**, Brushed Nickel **(105)**	$ 581
10030097-002		$ 581
10030097-105		$ 581
10034250-084	Metal trim kit for Aeroeffect with Air Push Control (sold separately) Available colors: Chrome **(084)** and Brushed Nickel **(105)**	$ 82
10034250-105		$ 82
10022491-004	Cable-operated waste and overflow (16 in. to 22 in.) (sold separately) Available colors: White **(001)**, Bone **(004)**, Chrome **(084)** and Brushed Nickel **(105)**	$ 362

FOOTNOTES

No	Description
1	Components for standard colour units equipped with systems are colour-coordinated. Trim kit and/or air push with metallic finish can be added (additional charge applies). For non-standard colour units, please specify trim kit and/or air push colour (additional charge applies for metallic finishes). Please note that the positioning of the system's control could be in conflict with the door if one was installed on the unit. To insure compatibility, please contact customer service.
2	Please order flexible main hose 10006923 for installation of the blower further than 3 ft from the bathtub. For the Tandem models and the Serenade models (freestanding and drop-in), the blower is always remote and not factory installed so a 9 ft flexible main hose is included. Please note that the positioning of the system's control could be in conflict with the door if one was installed on the unit. To insure compatibility, please contact customer service.
3	The blower is not factory installed (remote). 9 ft flexible main hose included. Please note that the positioning of the system's control could be in conflict with the door if one was installed on the unit. To insure compatibility, please contact customer service.
4	For details on pump position and requirements, see technical drawings on https://www.maax.com. When there is a pump position A or B indicated on the technical drawing, please specify position when ordering.
5	For details on blower position and requirements, see technical drawings on https://www.maax.com. When there is a blower position A or B indicated on the technical drawing, please specify position when ordering.
30	Please see technical drawings on https://www.maax.com for grab bar and/or seat positioning.
31	Right (R)/Left (L) refers to the upper section of the ergonomic grab bar.
32	Right/Left refers to the pivot direction of the bar (from closed to open position).
33	Please see technical drawings on https://www.maax.com for reinforcement positioning and size.
36	Rear access grab bar installation. Must be secured onto unit prior to alcove unit insert.
54	A selection of units come with an access panel by default when equipped with a system. However, if the unit is only equipped with chromatherapy, the access panel will not be provided by default.
36	
36	

RECOMMENDED DOORS - VISIT OUR WEBSITE FOR A COMPLETE LIST OF RECOMMENDED DOORS

SKU	Product Name	Pag.
138522	Incognito 57 51-54 x 56 3/4 in. 8mm	1009
134560	Kameleon 51-55 x 57 - 6mm	1001
134660	Kameleon SC 51-55 x 57 - 6mm	993

STANDARD
(Left shown)
1 PIECE MODEL SHOWN

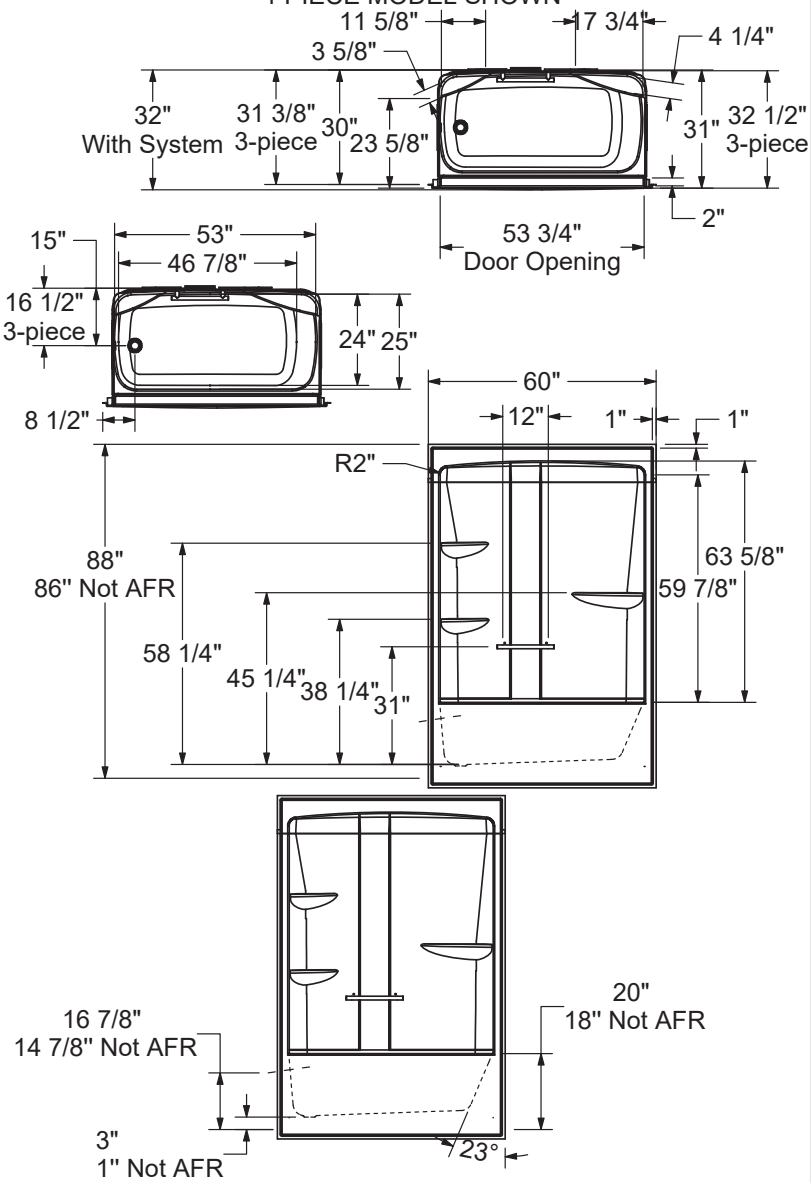

All dimensions are approximate. Structure measurements must be verified against the unit to ensure proper fit.

OPTIONAL REINFORCEMENT
(Left shown)

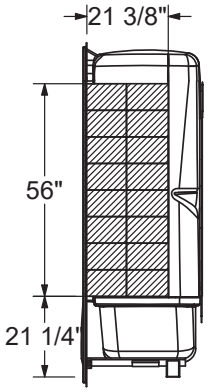

OPTIONAL REINFORCEMENT
(Back Wall)

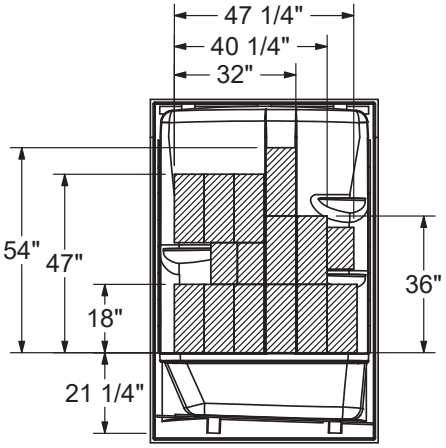

BG6034C

Material : AcrylX

Min: 19 Gal / 86 L
Max: 27 Gal / 123 L

Features

- 1-piece tub shower without roof cap
- Built-in shelves
- Center drain

BG6034C - 140001

SKU	System	Color	Configuration	Dimensions & Weight	Packaging	MSRP
140001-000-002-000	Soaker - No System	White	Center Drain	60” x 34” x 73 3/4” / 140 lb	98 ft^3	$ 1884
140001-001-002-000	Whirlpool [1 4]					$ 3671

COMMON OPTIONS

SKU	Description	MSRP
OPT10053	One chromatherapy light (factory installed) [54]	$ 790
OPT10095	Water heater assembly for whirlpool and combined systems (factory installed)	$ 1033
OPT10106-084	Metal trim kit for whirlpool and combined systems (factory installed) Available colors: Chrome **(084)** and Brushed Nickel **(105)**	$ 728
OPT10106-105		$ 728
OPT20137-004	Cable-operated waste and overflow (16 in. to 22 in.) (included in product packaging when purchased) Available colors: White **(001)**, Bone **(004)**, Chrome **(084)** and Brushed Nickel **(105)**	$ 362
OPT20137-084		$ 362
OPT20137-105		$ 362
OPT20137-001		$ 362

ACCESSORIES

SKU	Description	MSRP
10004306-001	White foam cushion with 2 suction pads (sold separately) Available color: White **(001)**	$ 138
10006887-105	Metal trim kit for Whirlpool and combined systems (sold separately) Available colors: Chrome **(084)** and Brushed Nickel **(105)**	$ 728
10006887-084		$ 728
10022491-004	Cable-operated waste and overflow (16 in. to 22 in.) (sold separately) Available colors: White **(001)**, Bone **(004)**, Chrome **(084)** and Brushed Nickel **(105)**	$ 362

FOOTNOTES

No	Description
1	Components for standard colour units equipped with systems are colour-coordinated. Trim kit and/or air push with metallic finish can be added (additional charge applies). For non-standard colour units, please specify trim kit and/or air push colour (additional charge applies for metallic finishes). Please note that the positioning of the system’s control could be in conflict with the door if one was installed on the unit. To insure compatibility, please contact customer service.
4	For details on pump position and requirements, see technical drawings on https://www.maax.com. When there is a pump position A or B indicated on the technical drawing, please specify position when ordering.
54	A selection of units come with an access panel by default when equipped with a system. However, if the unit is only equipped with chromatherapy, the access panel will not be provided by default.

RECOMMENDED DOORS - VISIT OUR WEBSITE FOR A COMPLETE LIST OF RECOMMENDED DOORS

SKU	Product Name	Pag.
136270	Duel 56-59 x 55 1/2-59	1003
105409	Mika 54 - 59 ½ x 55 in.	1015

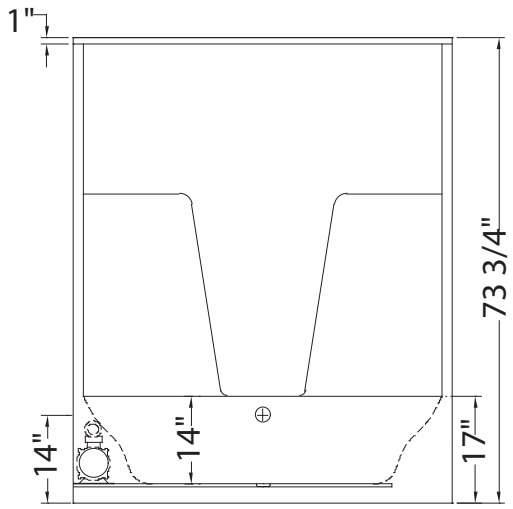

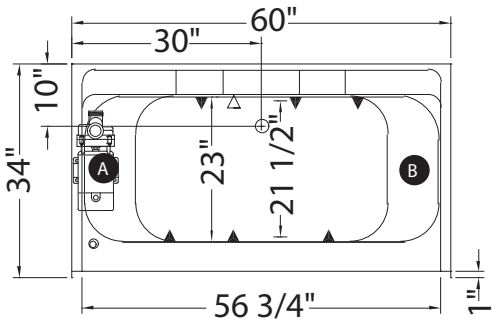

Ⓐ : Standard blower and/or pump location
Ⓑ : Optional blower and/or pump location
(▲) : Indicates Whirlpool jets positioning
(△) : Indicates suction positioning

All dimensions are approximate. Structure measurements must be verified against the unit to ensure proper fit.

Icon TS6030

Material : AcrylX

Features

- Made of AcrylX applied acrylic for improved durability
- 1-Piece construction for reliable water containment
- Smooth walls for a modern and minimalist look
- Left-hand or right-hand drain configuration
- Ample shelf capacity
- Flat walls to easily accommodate future grab bars
- Standard non-AFR (above-the-floor rough)
- Slip-resistant textured bottom for additional safety
- Warranty: 25 years

ICON TS6030 - 107158

SKU	System	Color	Configuration	Dimensions & Weight	Packaging	MSRP
107158-000-002-001	Soaker - No System	White	Left Drain	60” x 31 1/4” x 74 1/4” / 125 lb	80.57 ft^3	$ 2360
107158-000-002-002			Right Drain			$ 2360

COMMON OPTIONS

SKU	Description	MSRP
OPT20212-B	Back Wall reinforcement for future grab installation [33]	$ 105
OPT20212-L	Left Wall reinforcement for future grab installation [33]	$ 105
OPT20212-R	Right Wall reinforcement for future grab installation [33]	$ 105
OPT10189	Three-wall reinforcement for future grab bar installation [33]	$ 305
OPT20203-B-002	18 in. Modern straight grab bar [30] **OPT 20203-B-XXX Horizontal grab bar on back wall** Available colours: White **(002)**, Chrome **(084)** and Brushed Nickel **(105)**	$ 283
OPT20203-B-105		$ 283
OPT20203-B-084		$ 283
OPT20203-L-105	18 in. Modern straight grab bar [30] **OPT 20203-L-XXX Vertical grab bar on left wall** Available colours: White **(002)**, Chrome **(084)** and Brushed Nickel **(105)**	$ 283
OPT20203-L-002		$ 283
OPT20203-L-084		$ 283
OPT20203-R-084	18 in. Modern straight grab bar [30] **OPT 20203-R-XXX Vertical grab bar on right wall** Available colours: White **(002)**, Chrome **(084)** and Brushed Nickel **(105)**	$ 283
OPT20203-R-002		$ 283
OPT20203-R-105		$ 283
OPT20204-B-002	24 in. Modern straight grab bar [30] **OPT 20204-B-XXX Horizontal grab bar on back wall** Available colours: White **(002)**, Chrome **(084)** and Brushed Nickel **(105)**	$ 331
OPT20204-B-084		$ 331
OPT20204-B-105		$ 331
OPT20204-L-084	24 in. Modern straight grab bar [30] **OPT 20204-L-XXX Vertical grab bar on left wall** Available colours: White **(002)**, Chrome **(084)** and Brushed Nickel **(105)**	$ 331
OPT20204-L-105		$ 331
OPT20204-L-002		$ 331
OPT20204-R-002	24 in. Modern straight grab bar [30] **OPT 20204-R-XXX Vertical grab bar on right wall** Available colours: White **(002)**, Chrome **(084)** and Brushed Nickel **(105)**	$ 331
OPT20204-R-084		$ 331
OPT20204-R-105		$ 331
OPT20217-L-105	32 in. Curved grab bar (back wall) [3031] **OPT 20217-L-XXX Left-hand curved grab bar on back wall** Available colours: White **(002)**, Chrome **(084)** and Brushed Nickel **(105)**	$ 584
OPT20217-L-002		$ 584
OPT20217-L-084		$ 584
OPT20217-R-002	32 in. Curved grab bar (back wall) [3031] **OPT 20217-R-XXX Right-hand curved grab bar on back wall** Available colours: White **(002)**, Chrome **(084)** and Brushed Nickel **(105)**	$ 584
OPT20217-R-105		$ 584
OPT20217-R-084		$ 584

FOOTNOTES

No	Description
30	Please see technical drawings on https://www.maax.com for grab bar and/or seat positioning.
31	Right (R)/Left (L) refers to the upper section of the ergonomic grab bar.
33	Please see technical drawings on https://www.maax.com for reinforcement positioning and size.

RECOMMENDED DOORS - VISIT OUR WEBSITE FOR A COMPLETE LIST OF RECOMMENDED DOORS

SKU	Product Name	Pag.
139354	Incognito 57 56-59 x 56 3/4 in. 8mm Tub Door	1011
135330	Incognito 57 Shaker 56-59 x 56 3/4 in. 8mm Tub Door	1005
139351	Incognito 57 56-59 x 56 3/4 in. 6mm Tub Door	1007
135695	Revelation Square 56-59 x 56 ¾-59 ¼ - 8mm	1022
135692	Revelation Square 56-59 x 56 ¾-58 ¼ - 6mm	1020
136695	Revelation Round 56-59 x 56 ¾-59 ¼ - 8 mm	1018
136692	Revelation Round 56-59 x 56 3/4-59 1/4	1017
135320	Uptown 56-59 x 58 in. 8 mm	1024
136270	Duel 56-59 x 55 1/2-59	1003
134573	Kameleon 55-59 x 57 - 8mm	997
134561	Kameleon 55-59 x 57 - 6mm	999
134670	Kameleon SC 55-59 x 57 - 8mm	991
134661	Kameleon SC 55-59 x 57 - 6mm	995

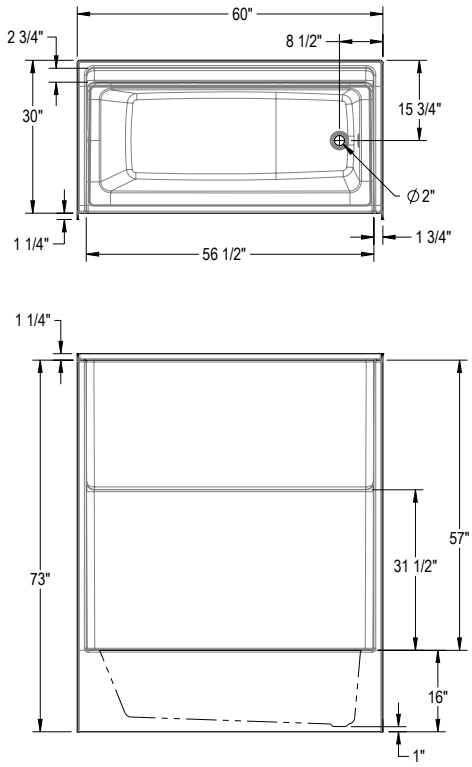

Age-In-Place Reinforcement Option

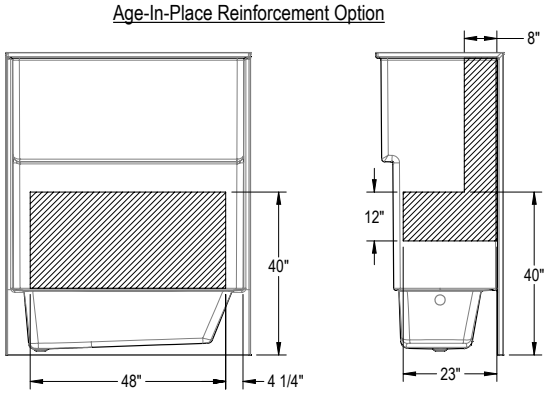

Full Wall Reinforcement Option

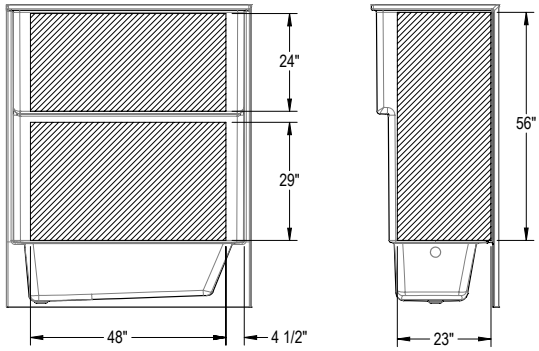

All dimensions are approximate. Structure measurments must be verified against the unit to ensure proper fit.

Icon TS6032

Material : AcrylX

Features

- Made of AcrylX applied acrylic for improved durability
- 1-Piece construction for reliable water containment
- Smooth walls for a modern and minimalist look
- Left-hand or right-hand drain configuration
- Ample shelf capacity
- Flat walls to easily accomodate future grab bars
- Standard non-AFR (above-the-floor rough)
- Slip-resistant textured bottom for additional safety
- Warranty: 25 years

ICON TS6032 - 107157

SKU	System	Color	Configuration	Dimensions & Weight	Packaging	MSRP
107157-000-002-001	Soaker - No System	White	Left Drain	60” x 32 3/4” x 74 1/4” / 135 lb	84.43 ft^3	$ 2408
107157-000-002-002			Right Drain			$ 2408

ICON TS6032X AFR - 107164

SKU	System	Color	Configuration	Dimensions & Weight	Packaging	MSRP
107164-000-002-501	Soaker - No System	White	Left Drain	60” x 32 3/4” x 76 1/4” / 138 lb	86.71 ft^3	$ 2408
107164-000-002-502			Right Drain			$ 2408

COMMON OPTIONS

SKU	Description	MSRP
OPT20204-L-084	24 in. Modern straight grab bar [30] **OPT 20204-L-XXX Vertical grab bar on left wall** Available colours: White **(002)**, Chrome **(084)** and Brushed Nickel **(105)**	$ 331
OPT20204-L-105		$ 331
OPT20204-L-002		$ 331
OPT20204-R-002	24 in. Modern straight grab bar [30] **OPT 20204-R-XXX Vertical grab bar on right wall** Available colours: White **(002)**, Chrome **(084)** and Brushed Nickel **(105)**	$ 331
OPT20204-R-084		$ 331
OPT20204-R-105		$ 331
OPT20217-L-105	32 in. Curved grab bar (back wall) [3031] **OPT 20217-L-XXX Left-hand curved grab bar on back wall** Available colours: White **(002)**, Chrome **(084)** and Brushed Nickel **(105)**	$ 584
OPT20217-L-002		$ 584
OPT20217-L-084		$ 584
OPT20217-R-002	32 in. Curved grab bar (back wall) [3031] **OPT 20217-R-XXX Right-hand curved grab bar on back wall** Available colours: White **(002)**, Chrome **(084)** and Brushed Nickel **(105)**	$ 584
OPT20217-R-105		$ 584
OPT20217-R-084		$ 584
OPT20203-B-002	18 in. Modern straight grab bar [30] **OPT 20203-B-XXX Horizontal grab bar on back wall** Available colours: White **(002)**, Chrome **(084)** and Brushed Nickel **(105)**	$ 283
OPT20203-B-105		$ 283
OPT20203-B-084		$ 283
OPT20203-L-105	18 in. Modern straight grab bar [30] **OPT 20203-L-XXX Vertical grab bar on left wall** Available colours: White **(002)**, Chrome **(084)** and Brushed Nickel **(105)**	$ 283
OPT20203-L-002		$ 283
OPT20203-L-084		$ 283
OPT20203-R-084	18 in. Modern straight grab bar [30] **OPT 20203-R-XXX Vertical grab bar on right wall** Available colours: White **(002)**, Chrome **(084)** and Brushed Nickel **(105)**	$ 283
OPT20203-R-002		$ 283
OPT20203-R-105		$ 283
OPT20204-B-002	24 in. Modern straight grab bar [30] **OPT 20204-B-XXX Horizontal grab bar on back wall** Available colours: White **(002)**, Chrome **(084)** and Brushed Nickel **(105)**	$ 331
OPT20204-B-084		$ 331
OPT20204-B-105		$ 331
OPT20212-B	Back Wall reinforcement for future grab installation [33]	$ 105

COMMON OPTIONS

SKU	Description	MSRP
OPT20212-L	Left Wall reinforcement for future grab installation [33]	$ 105
OPT20212-R	Right Wall reinforcement for future grab installation [33]	$ 105
OPT10189	Three-wall reinforcement for future grab bar installation [33]	$ 305

FOOTNOTES

No	Description
30	Please see technical drawings on https://www.maax.com for grab bar and/or seat positioning.
31	Right (R)/Left (L) refers to the upper section of the ergonomic grab bar.
33	Please see technical drawings on https://www.maax.com for reinforcement positioning and size.

RECOMMENDED DOORS - VISIT OUR WEBSITE FOR A COMPLETE LIST OF RECOMMENDED DOORS

SKU	Product Name	Pag.
139354	Incognito 57 56-59 x 56 3/4 in. 8mm Tub Door	1011
135330	Incognito 57 Shaker 56-59 x 56 3/4 in. 8mm Tub Door	1005
139351	Incognito 57 56-59 x 56 3/4 in. 6mm Tub Door	1007
135695	Revelation Square 56-59 x 56 ¾-59 ¼ - 8mm	1022
135692	Revelation Square 56-59 x 56 ¾-58 ¼ - 6mm	1020
136695	Revelation Round 56-59 x 56 ¾-59 ¼ - 8 mm	1018
136692	Revelation Round 56-59 x 56 3/4-59 1/4	1017
135320	Uptown 56-59 x 58 in. 8 mm	1024
136270	Duel 56-59 x 55 1/2-59	1003
134670	Kameleon SC 55-59 x 57 - 8mm	991
134661	Kameleon SC 55-59 x 57 - 6mm	995

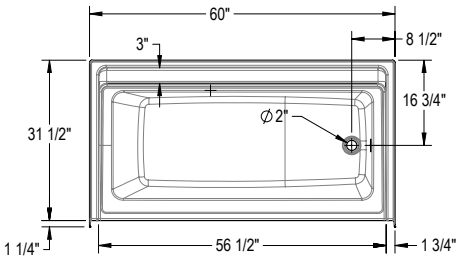

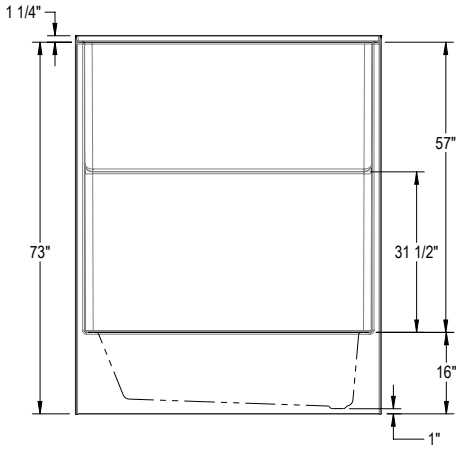

All dimensions are approximate. Structure measurments must be verified against the unit to ensure proper fit.

FHA Reinforcement Option

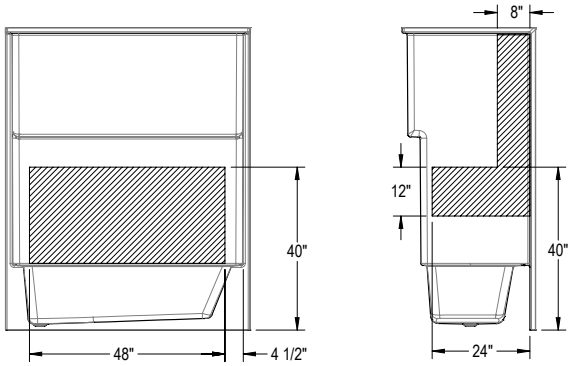

Full Wall Reinforcement Option

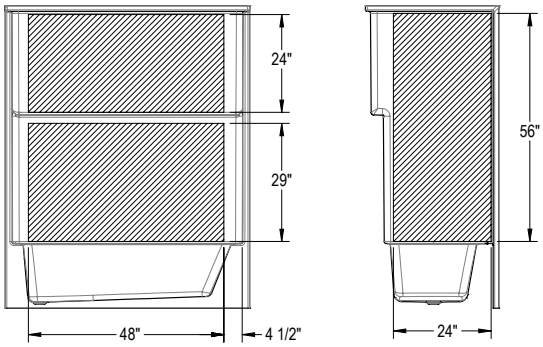

Icon TS6036

Material : AcrylX

Features

- Made of AcrylX applied acrylic for improved durability
- 1-Piece construction for reliable water containment
- Smooth walls for a modern and minimalist look
- Left-hand or right-hand drain configuration
- Ample shelf capacity
- Flat walls to easily accomodate future grab bars
- Standard non-AFR (above-the-floor rough)
- Slip-resistant textured bottom for additional safety
- Warranty: 25 years

ICON TS6036 - 107162

SKU	System	Color	Configuration	Dimensions & Weight	Packaging	MSRP
107162-000-002-001	Soaker - No System	White	Left Drain	60” x 37 1/4” x 74 1/4” / 140 lb	964 ft^3	$ 2529
107162-000-002-002			Right Drain			$ 2529

ICON TS6036X AFR - 107168

SKU	System	Color	Configuration	Dimensions & Weight	Packaging	MSRP
107168-000-002-501	Soaker - No System	White	Left Drain	60” x 37 1/4” x 76 1/4” / 143 lb	98.62 ft^3	$ 2529
107168-000-002-502			Right Drain			$ 2529

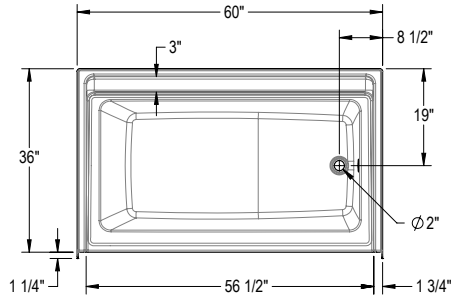

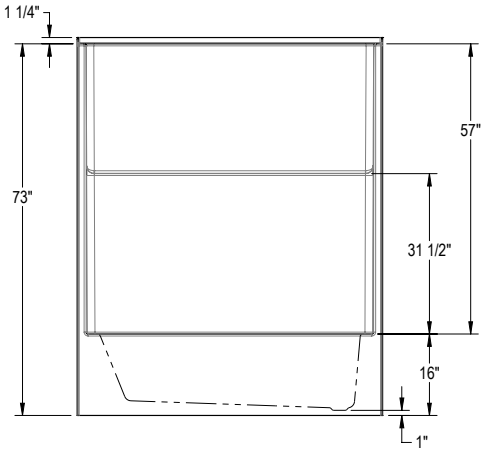

All dimensions are approximate. Structure measurments must be verified against the unit to ensure proper fit.

FHA Reinforcement Option

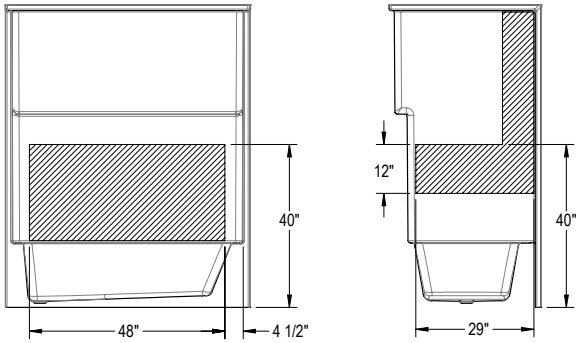

Full Wall Reinforcement Option

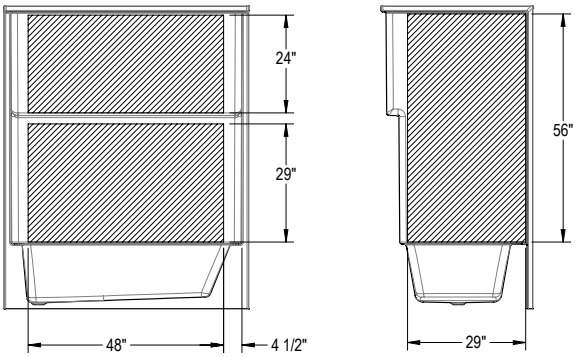

KDTS 3060

Material : AcrylX

Features

- Model Size: 59.625 L in. X 29.875 W in. X 77.5 H in.
- AcrylX high gloss finish for improved durability
- Smooth walls for a modern and easy to maintain look
- 4 piece construction for easy handling and installation
- Innovative PIN system to lock the pieces in place and ease the installation
- Convenient storage for all bath essentials with a large top shelf and a grab bar
- Comfortable bathing well
- Textured bottom bathtub for added safety
- Proudly made in North America

KDTS 3060 - 145006

SKU	System	Color	Configuration	Dimensions & Weight	Packaging	MSRP
145006-000-002-094	Soaker - No System	White	Left Drain	59 5/8” x 29 7/8” x 77 1/2” / 152 lb	75.78 ft^3	$ 2573
145006-000-002-095			Right Drain			$ 2573

KDTS 3060 AFR - 145007

SKU	System	Color	Configuration	Dimensions & Weight	Packaging	MSRP
145007-000-002-594	Soaker - No System	White	Left Drain	59 5/8” x 29 7/8” x 79 5/8” / 152 lb	75.78 ft^3	$ 2573
145007-000-002-595			Right Drain			$ 2573

COMMON OPTIONS

SKU	Description	MSRP
OPT20203-R-084	18 in. Modern straight grab bar [30] **OPT 20203-R-XXX Vertical grab bar on right wall** Available colours: White **(002)**, Chrome **(084)** and Brushed Nickel **(105)**	$ 283
OPT20203-R-002		$ 283
OPT20203-R-105		$ 283
OPT20204-B-002	24 in. Modern straight grab bar [30] **OPT 20204-B-XXX Horizontal grab bar on back wall** Available colours: White **(002)**, Chrome **(084)** and Brushed Nickel **(105)**	$ 331
OPT20204-B-084		$ 331
OPT20204-B-105		$ 331
OPT20204-L-084	24 in. Modern straight grab bar [30] **OPT 20204-L-XXX Vertical grab bar on left wall** Available colours: White **(002)**, Chrome **(084)** and Brushed Nickel **(105)**	$ 331
OPT20204-L-105		$ 331
OPT20204-L-002		$ 331
OPT20204-R-002	24 in. Modern straight grab bar [30] **OPT 20204-R-XXX Vertical grab bar on right wall** Available colours: White **(002)**, Chrome **(084)** and Brushed Nickel **(105)**	$ 331
OPT20204-R-084		$ 331
OPT20204-R-105		$ 331
OPT20212-B	Back Wall reinforcement for future grab installation [33]	$ 105
OPT20212-L	Left Wall reinforcement for future grab installation [33]	$ 105
OPT20212-R	Right Wall reinforcement for future grab installation [33]	$ 105
OPT10109-084	Metallic finish grab bar replacing Acrylic grab bar Available colors: Chrome **(084)** and Brushed Nickel **(105)**	$ 345
OPT10109-105		$ 345
OPT20203-B-002	18 in. Modern straight grab bar [30] **OPT 20203-B-XXX Horizontal grab bar on back wall** Available colours: White **(002)**, Chrome **(084)** and Brushed Nickel **(105)**	$ 283
OPT20203-B-105		$ 283
OPT20203-B-084		$ 283
OPT20203-L-105	18 in. Modern straight grab bar [30] **OPT 20203-L-XXX Vertical grab bar on left wall** Available colours: White **(002)**, Chrome **(084)** and Brushed Nickel **(105)**	$ 283
OPT20203-L-002		$ 283
OPT20203-L-084		$ 283

COMMON OPTIONS

SKU	Description	MSRP
145010-L-000-002	Tub only with PIN system **145010-R-000-XXX Right-hand drain** **145010-L-000-XXX Left-hand drain**	$ 1155
145010-R-000-002		$ 1155
145048-000-002-090	Side walls (right and left) for KDTS 2954, KDTS 3060 and KDS 3060	$ 705
145061-000-002-090	Back wall for KDTS 3060, KDTS 3260, KDS 3060 and KDS 3460 [28]	$ 717

ACCESSORIES

SKU	Description	MSRP
10004306-001	White foam cushion with 2 suction pads (sold separately) Available color: White **(001)**	$ 138
10022491-004	Cable-operated waste and overflow (16 in. to 22 in.) (sold separately) Available colors: White **(001)**, Bone **(004)**, Chrome **(084)** and Brushed Nickel **(105)**	$ 362

FOOTNOTES

No	Description
28	Handles for standard colour units are colour-coordinated. Handles with metallic finish can be added (additional charge applies). For non-standard colour units, please specify handle colour (additional charge applies for metallic finishes).
30	Please see technical drawings on https://www.maax.com for grab bar and/or seat positioning.
33	Please see technical drawings on https://www.maax.com for reinforcement positioning and size.

RECOMMENDED DOORS - VISIT OUR WEBSITE FOR A COMPLETE LIST OF RECOMMENDED DOORS

SKU	Product Name	Pag.
139398	Halo 56 ½-59 x 59 - 8mm	990
139351	Incognito 57 56-59 x 56 3/4 in. 6mm Tub Door	1007
139354	Incognito 57 56-59 x 56 3/4 in. 8mm Tub Door	1011
135330	Incognito 57 Shaker 56-59 x 56 3/4 in. 8mm Tub Door	1005
135695	Revelation Square 56-59 x 56 ¾-59 ¼ - 8mm	1022
135692	Revelation Square 56-59 x 56 ¾-58 ¼ - 6mm	1020
136692	Revelation Round 56-59 x 56 3/4-59 1/4	1017
136695	Revelation Round 56-59 x 56 ¾-59 ¼ - 8 mm	1018
135320	Uptown 56-59 x 58 in. 8 mm	1024
136270	Duel 56-59 x 55 1/2-59	1003
138760	Inverto 56-59 x 55 ½-59 - 8mm	1013
138485	Vela 56 ½-59 x 59 - 8mm	988
138480		986
134661	Kameleon SC 55-59 x 57 - 6mm	995
134573	Kameleon 55-59 x 57 - 8mm	997
134670	Kameleon SC 55-59 x 57 - 8mm	991
134561	Kameleon 55-59 x 57 - 6mm	999
105410	Polar 54-59 1/2 x 57 1/2 in.	1017
105409	Mika 54 - 59 ½ x 55 in.	1015

STANDARD

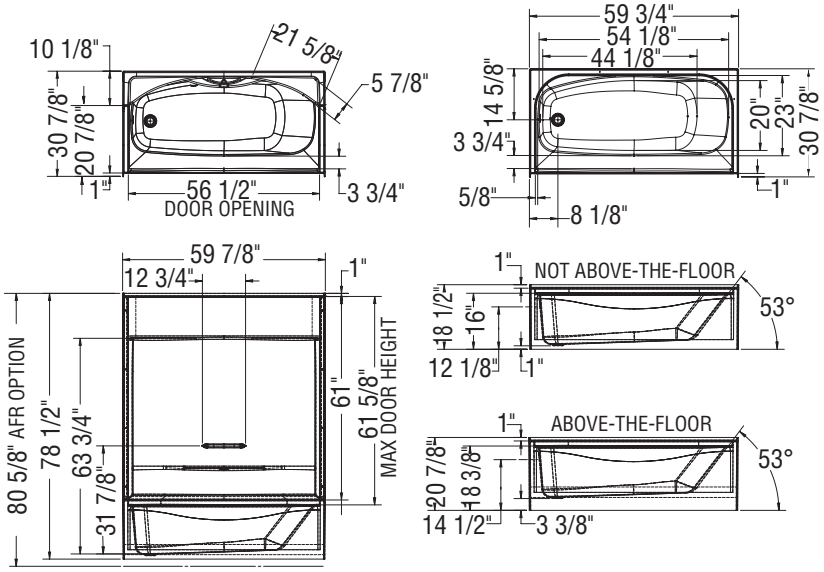

REINFORCEMENT BACKING

OPTION 20212-R RIGHT WALL SHOWN
OPTION 20212-L LEFT WALL SYMMETRICAL

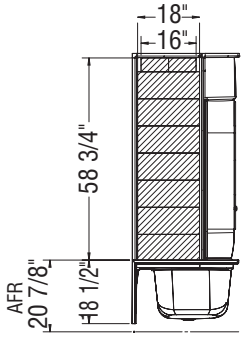

OPTION 20212-B BACK WALL

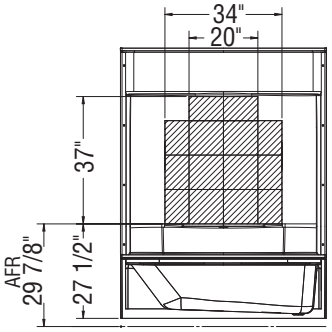

GRAB BARS

OPTION 20203

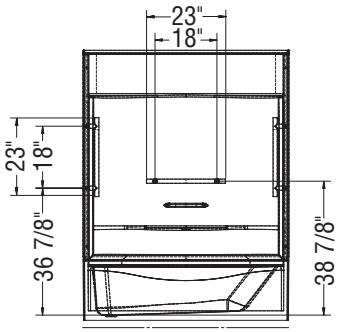

OPTION 20204

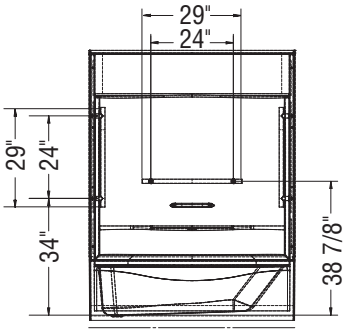

OPTION
20203-20204

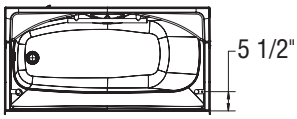

All dimensions are approximate. Structure measurements must be verified against the unit to ensure proper fit.

KDTS 3260

Material : AcrylX

Features

- Model Size: 59.375 L in. X 32 W in. X 79.25 H in.
- AcrylX high gloss finish for improved durability
- Smooth walls for a modern and easy to maintain look
- 4 piece construction for easy handling and installation
- Innovative PIN system to lock the pieces in place and ease the installation
- Convenient storage for all bath essentials with a large top shelf and a grab bar
- Comfortable bathing well
- Textured bottom bathtub for added safety
- Proudly made in North America

KDTS 3260 - 145012

SKU	System	Color	Configuration	Dimensions & Weight	Packaging	MSRP
145012-000-002-094	Soaker - No System	White	Left Drain	59 3/8” x 32” x 79 1/4” / 175 lb	81.52 ft³	$ 2689
145012-000-002-095			Right Drain			$ 2689

KDTS 3260 AFR - 145013

SKU	System	Color	Configuration	Dimensions & Weight	Packaging	MSRP
145013-000-002-594	Soaker - No System	White	Left Drain	59 3/8” x 32” x 81 3/4” / 175 lb	81.52 ft³	$ 2689
145013-000-002-595			Right Drain			$ 2689

COMMON OPTIONS

SKU	Description	MSRP
OPT20203-R-084	18 in. Modern straight grab bar [30] **OPT 20203-R-XXX Vertical grab bar on right wall** Available colours: White **(002)**, Chrome **(084)** and Brushed Nickel **(105)**	$ 283
OPT20203-R-002		$ 283
OPT20203-R-105		$ 283
OPT20204-B-002	24 in. Modern straight grab bar [30] **OPT 20204-B-XXX Horizontal grab bar on back wall** Available colours: White **(002)**, Chrome **(084)** and Brushed Nickel **(105)**	$ 331
OPT20204-B-084		$ 331
OPT20204-B-105		$ 331
OPT20204-L-084	24 in. Modern straight grab bar [30] **OPT 20204-L-XXX Vertical grab bar on left wall** Available colours: White **(002)**, Chrome **(084)** and Brushed Nickel **(105)**	$ 331
OPT20204-L-105		$ 331
OPT20204-L-002		$ 331
OPT20204-R-002	24 in. Modern straight grab bar [30] **OPT 20204-R-XXX Vertical grab bar on right wall** Available colours: White **(002)**, Chrome **(084)** and Brushed Nickel **(105)**	$ 331
OPT20204-R-084		$ 331
OPT20204-R-105		$ 331
OPT20212-B	Back Wall reinforcement for future grab installation [33]	$ 105
OPT20212-L	Left Wall reinforcement for future grab installation [33]	$ 105
OPT20212-R	Right Wall reinforcement for future grab installation [33]	$ 105
OPT10109-084	Metallic finish grab bar replacing Acrylic grab bar Available colors: Chrome **(084)** and Brushed Nickel **(105)**	$ 345
OPT10109-105		$ 345
OPT20203-B-002	18 in. Modern straight grab bar [30] **OPT 20203-B-XXX Horizontal grab bar on back wall** Available colours: White **(002)**, Chrome **(084)** and Brushed Nickel **(105)**	$ 283
OPT20203-B-105		$ 283
OPT20203-B-084		$ 283
OPT20203-L-105	18 in. Modern straight grab bar [30] **OPT 20203-L-XXX Vertical grab bar on left wall** Available colours: White **(002)**, Chrome **(084)** and Brushed Nickel **(105)**	$ 283
OPT20203-L-002		$ 283
OPT20203-L-084		$ 283

COMMON OPTIONS

SKU	Description	MSRP
145017-R-000-002	Tub only with PIN system (AFR) **145017-R-000-XXX Right-hand drain** **145017-L-000-XXX Left-hand drain**	$ 1267
145017-L-000-002		$ 1267
145051-000-002-090	Side walls (right and left) for KDTS 3260	$ 708
145061-000-002-090	Back wall for KDTS 3060, KDTS 3260, KDS 3060 and KDS 3460 [28]	$ 717

ACCESSORIES

SKU	Description	MSRP
10004306-001	White foam cushion with 2 suction pads (sold separately) Available color: White **(001)**	$ 138
10022491-004	Cable-operated waste and overflow (16 in. to 22 in.) (sold separately) Available colors: White **(001)**, Bone **(004)**, Chrome **(084)** and Brushed Nickel **(105)**	$ 362

FOOTNOTES

No	Description
28	Handles for standard colour units are colour-coordinated. Handles with metallic finish can be added (additional charge applies). For non-standard colour units, please specify handle colour (additional charge applies for metallic finishes).
30	Please see technical drawings on https://www.maax.com for grab bar and/or seat positioning.
33	Please see technical drawings on https://www.maax.com for reinforcement positioning and size.

RECOMMENDED DOORS - VISIT OUR WEBSITE FOR A COMPLETE LIST OF RECOMMENDED DOORS

SKU	Product Name	Pag.
139351	Incognito 57 56-59 x 56 3/4 in. 6mm Tub Door	1007
139354	Incognito 57 56-59 x 56 3/4 in. 8mm Tub Door	1011
135330	Incognito 57 Shaker 56-59 x 56 3/4 in. 8mm Tub Door	1005
135695	Revelation Square 56-59 x 56 ¾-59 ¼ - 8mm	1022
135692	Revelation Square 56-59 x 56 ¾-58 ¼ - 6mm	1020
136692	Revelation Round 56-59 x 56 3/4-59 1/4	1017
136695	Revelation Round 56-59 x 56 ¾-59 ¼ - 8 mm	1018
135320	Uptown 56-59 x 58 in. 8 mm	1024
136270	Duel 56-59 x 55 1/2-59	1003
138760	Inverto 56-59 x 55 ½-59 - 8mm	1013
134661	Kameleon SC 55-59 x 57 - 6mm	995
134573	Kameleon 55-59 x 57 - 8mm	997
134670	Kameleon SC 55-59 x 57 - 8mm	991
134561	Kameleon 55-59 x 57 - 6mm	999
105410	Polar 54-59 1/2 x 57 1/2 in.	1017
105409	Mika 54 - 59 ½ x 55 in.	1015

STANDARD

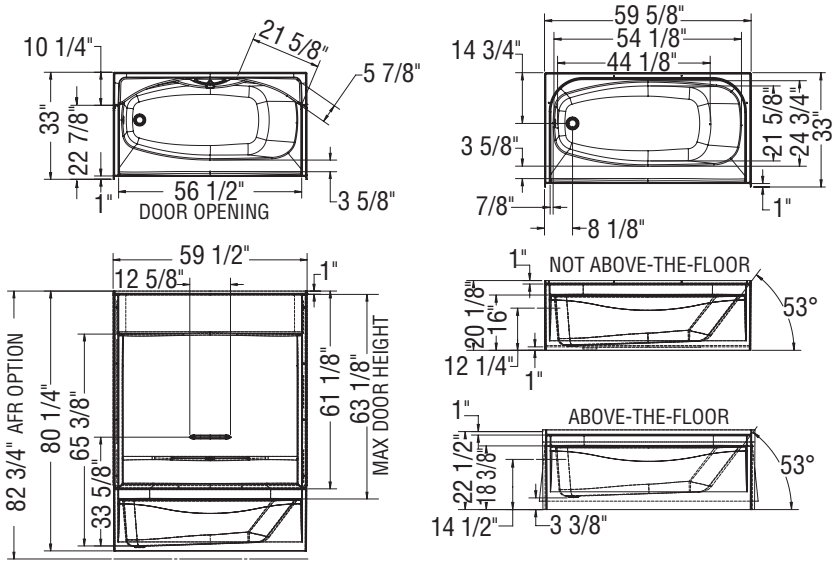

REINFORCEMENT BACKING

OPTION 20212-R RIGHT WALL SHOWN
OPTION 20212-L LEFT WALL SYMMETRICAL

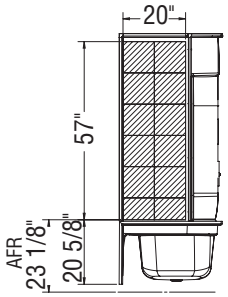

OPTION 20212-B BACK WALL

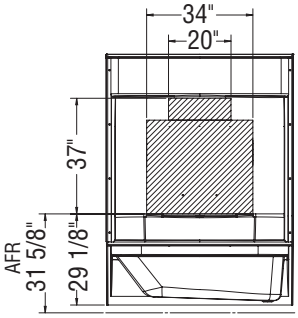

GRAB BARS

OPTION 20203

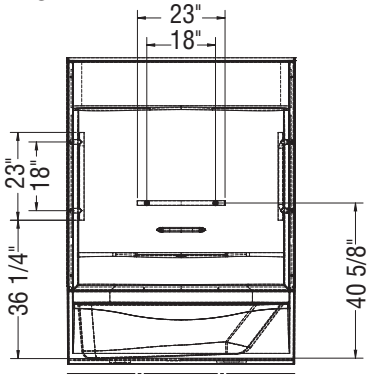

OPTION 20204

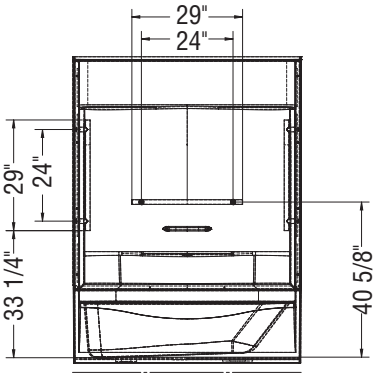

OPTION
20203-20204

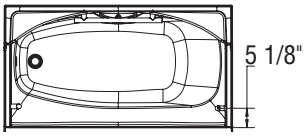

All dimensions are approximate. Structure measurements must be verified against the unit to ensure proper fit.

TSEA Plus

Material : AcrylX

Min: 30 Gal / 136 L
Max: 40 Gal / 182 L

Features

- 1-piece tub shower without roof cap
- Integrated wide shelves
- 20 in. apron, 13 3/8 in. deep bathing well
- Above-the-Floor Rough (AFR)
- Optional wall reinforcement and grab bars
- Textured bottom

TSEA PLUS - 105674

SKU	System	Color	Configuration	Dimensions & Weight	Packaging	MSRP
105674-000-002-001	Soaker - No System	White	Left Drain	59 3/4” x 32” x 78” / 123 lb	91.3 ft³	$ 2408
105674-000-002-002			Right Drain			$ 2408
105674-L-001-002	Whirlpool [1 4]		Left Drain			$ 4195
105674-R-001-002			Right Drain			$ 4195

COMMON OPTIONS

SKU	Description	MSRP
OPT20203-R-084	18 in. Modern straight grab bar [30] **OPT 20203-R-XXX Vertical grab bar on right wall** Available colours: White **(002)**, Chrome **(084)** and Brushed Nickel **(105)**	$ 283
OPT20203-R-002		$ 283
OPT20203-R-105		$ 283
OPT20204-B-002	24 in. Modern straight grab bar [30] **OPT 20204-B-XXX Horizontal grab bar on back wall** Available colours: White **(002)**, Chrome **(084)** and Brushed Nickel **(105)**	$ 331
OPT20204-B-084		$ 331
OPT20204-B-105		$ 331
OPT20204-L-084	24 in. Modern straight grab bar [30] **OPT 20204-L-XXX Vertical grab bar on left wall** Available colours: White **(002)**, Chrome **(084)** and Brushed Nickel **(105)**	$ 331
OPT20204-L-105		$ 331
OPT20204-L-002		$ 331
OPT20204-R-002	24 in. Modern straight grab bar [30] **OPT 20204-R-XXX Vertical grab bar on right wall** Available colours: White **(002)**, Chrome **(084)** and Brushed Nickel **(105)**	$ 331
OPT20204-R-084		$ 331
OPT20204-R-105		$ 331
OPT20212-B	Back Wall reinforcement for future grab installation [33]	$ 105
OPT20212-L	Left Wall reinforcement for future grab installation [33]	$ 105
OPT20212-R	Right Wall reinforcement for future grab installation [33]	$ 105
OPT10053	One chromatherapy light (factory installed) [54]	$ 790
OPT10095	Water heater assembly for whirlpool and combined systems (factory installed)	$ 1033
OPT10106-084	Metal trim kit for whirlpool and combined systems (factory installed) Available colors: Chrome **(084)** and Brushed Nickel **(105)**	$ 728
OPT10106-105		$ 728
OPT20137-004	Cable-operated waste and overflow (16 in. to 22 in.) (included in product packaging when purchased) Available colors: White **(001)**, Bone **(004)**, Chrome **(084)** and Brushed Nickel **(105)**	$ 362
OPT20137-084		$ 362
OPT20137-105		$ 362
OPT20137-001		$ 362
OPT20203-B-002	18 in. Modern straight grab bar [30] **OPT 20203-B-XXX Horizontal grab bar on back wall** Available colours: White **(002)**, Chrome **(084)** and Brushed Nickel **(105)**	$ 283
OPT20203-B-105		$ 283
OPT20203-B-084		$ 283
OPT20203-L-105	18 in. Modern straight grab bar [30] **OPT 20203-L-XXX Vertical grab bar on left wall** Available colours: White **(002)**, Chrome **(084)** and Brushed Nickel **(105)**	$ 283

COMMON OPTIONS

SKU	Description	MSRP
OPT20203-L-002	18 in. Modern straight grab bar [30]	$ 283
OPT20203-L-084	**OPT 20203-L-XXX Vertical grab bar on left wall** Available colours: White **(002)**, Chrome **(084)** and Brushed Nickel **(105)**	$ 283

ACCESSORIES

SKU	Description	MSRP
10004306-001	White foam cushion with 2 suction pads (sold separately) Available color: White **(001)**	$ 138
10006887-105	Metal trim kit for Whirlpool and combined systems (sold separately) Available colors: Chrome **(084)** and Brushed Nickel **(105)**	$ 728
10006887-084		$ 728
10022491-004	Cable-operated waste and overflow (16 in. to 22 in.) (sold separately) Available colors: White **(001)**, Bone **(004)**, Chrome **(084)** and Brushed Nickel **(105)**	$ 362

FOOTNOTES

No	Description
1	Components for standard colour units equipped with systems are colour-coordinated. Trim kit and/or air push with metallic finish can be added (additional charge applies). For non-standard colour units, please specify trim kit and/or air push colour (additional charge applies for metallic finishes). Please note that the positioning of the system's control could be in conflict with the door if one was installed on the unit. To insure compatibility, please contact customer service.
4	For details on pump position and requirements, see technical drawings on https://www.maax.com. When there is a pump position A or B indicated on the technical drawing, please specify position when ordering.
30	Please see technical drawings on https://www.maax.com for grab bar and/or seat positioning.
33	Please see technical drawings on https://www.maax.com for reinforcement positioning and size.
54	A selection of units come with an access panel by default when equipped with a system. However, if the unit is only equipped with chromatherapy, the access panel will not be provided by default.

RECOMMENDED DOORS - VISIT OUR WEBSITE FOR A COMPLETE LIST OF RECOMMENDED DOORS

SKU	Product Name	Pag.
139351	Incognito 57 56-59 x 56 3/4 in. 6mm Tub Door	1007
139354	Incognito 57 56-59 x 56 3/4 in. 8mm Tub Door	1011
135330	Incognito 57 Shaker 56-59 x 56 3/4 in. 8mm Tub Door	1005
136270	Duel 56-59 x 55 1/2-59	1003
105409	Mika 54 - 59 ½ x 55 in.	1015

STANDARD

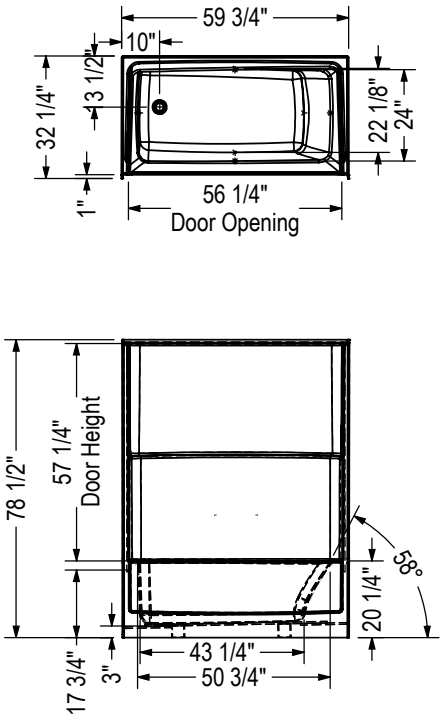

REINFORCEMENT

Standard Backing

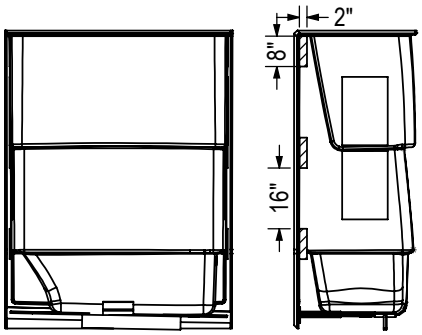

Full Backing

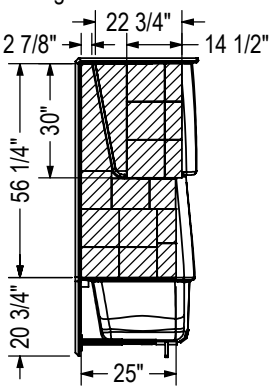

Builder Backing

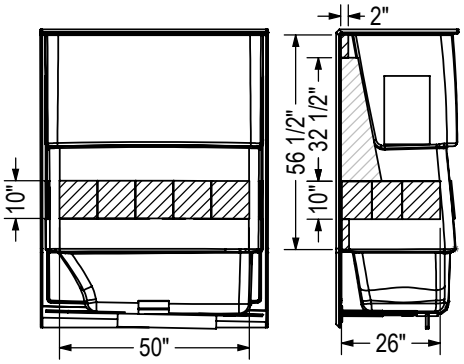

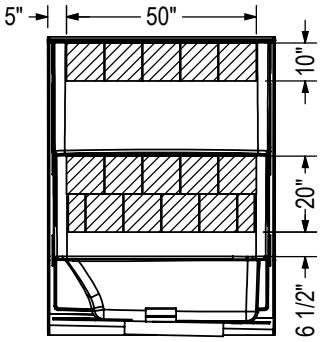

GRAB BARS

GRAB BAR 18"

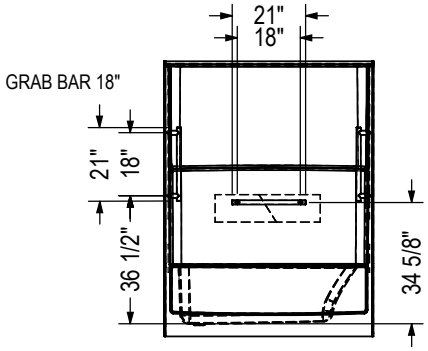

GRAB BAR 24"

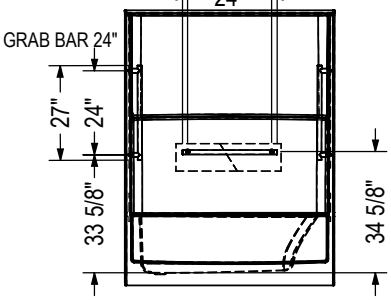

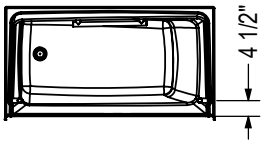

WHIRLPOOL SYSTEM

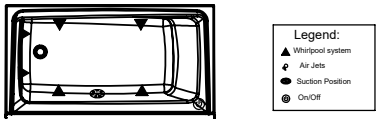

All dimensions are approximate. Structure measurements must be verified against the unit to ensure proper fit.

Go to Table of Contents

TSEA62

Material : AcrylX

Min: 30 Gal / 137 L
Max: 43 Gal / 196 L

Features

- 1-piece tub shower without roof cap
- Integrated shelf

TSEA62 - 140100

SKU	System	Color	Configuration	Dimensions & Weight	Packaging	MSRP
140100-000-002-001	Soaker - No System	White	Left Drain	59 7/8” x 31” x 74” / 130 lb	90 ft^3	$ 2284
140100-000-002-002			Right Drain			$ 2284
140100-001-002-001	Whirlpool [1 4]		Left Drain			$ 4071
140100-001-002-002			Right Drain			$ 4071

COMMON OPTIONS

SKU	Description	MSRP
OPT10053	One chromatherapy light (factory installed) [54]	$ 790
OPT10095	Water heater assembly for whirlpool and combined systems (factory installed)	$ 1033
OPT10106-084	Metal trim kit for whirlpool and combined systems (factory installed) Available colors: Chrome **(084)** and Brushed Nickel **(105)**	$ 728
OPT10106-105		$ 728
OPT20212-B	Back Wall reinforcement for future grab installation [33]	$ 105
OPT20212-L	Left Wall reinforcement for future grab installation [33]	$ 105
OPT20212-R	Right Wall reinforcement for future grab installation [33]	$ 105

ACCESSORIES

SKU	Description	MSRP
10004306-001	White foam cushion with 2 suction pads (sold separately) Available color: White **(001)**	$ 138
10006887-105	Metal trim kit for Whirlpool and combined systems (sold separately) Available colors: Chrome **(084)** and Brushed Nickel **(105)**	$ 728
10006887-084		$ 728

FOOTNOTES

No	Description
1	Components for standard colour units equipped with systems are colour-coordinated. Trim kit and/or air push with metallic finish can be added (additional charge applies). For non-standard colour units, please specify trim kit and/or air push colour (additional charge applies for metallic finishes). Please note that the positioning of the system’s control could be in conflict with the door if one was installed on the unit. To insure compatibility, please contact customer service.
4	For details on pump position and requirements, see technical drawings on https://www.maax.com. When there is a pump position A or B indicated on the technical drawing, please specify position when ordering.
33	Please see technical drawings on https://www.maax.com for reinforcement positioning and size.
54	A selection of units come with an access panel by default when equipped with a system. However, if the unit is only equipped with chromatherapy, the access panel will not be provided by default.

RECOMMENDED DOORS - VISIT OUR WEBSITE FOR A COMPLETE LIST OF RECOMMENDED DOORS

SKU	Product Name	Pag.
136270	Duel 56-59 x 55 1/2-59	1003
105409	Mika 54 - 59 ½ x 55 in.	1015

Full Wall Reinforcement Shown

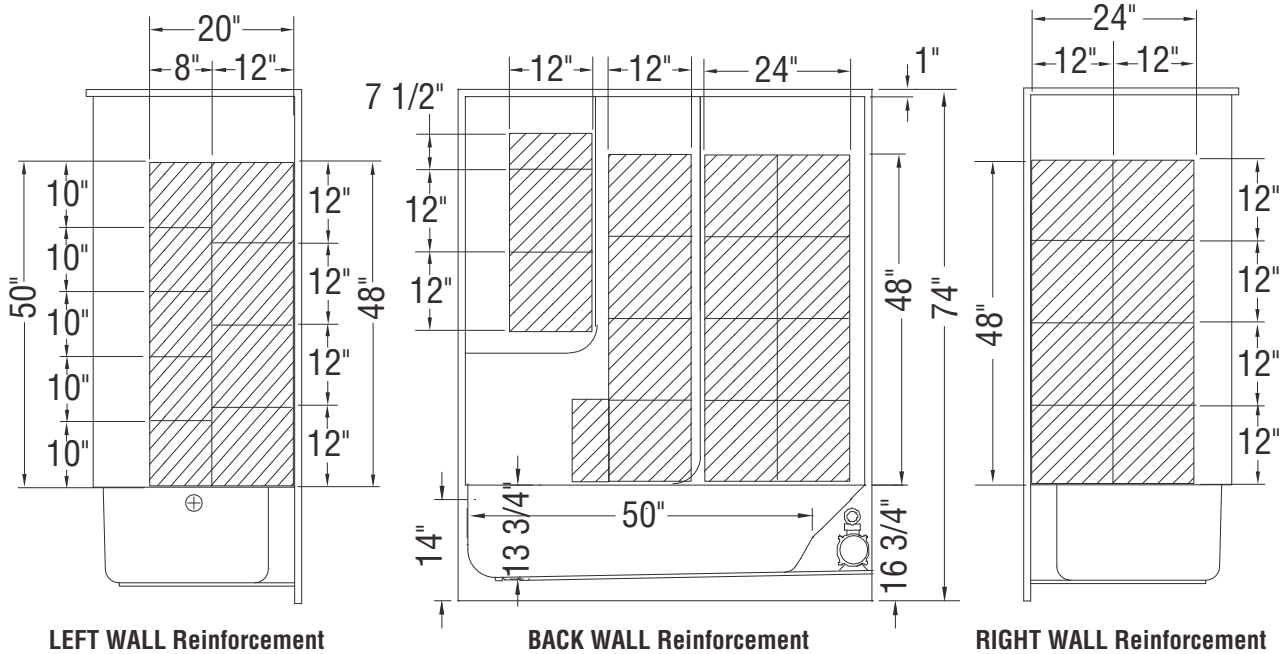

LEFT WALL Reinforcement **BACK WALL Reinforcement** **RIGHT WALL Reinforcement**

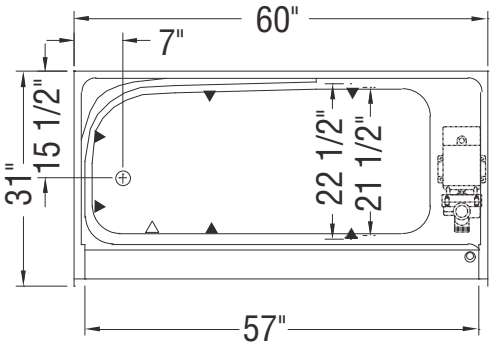

(▲): Indicates Whirlpool jets positioning
(△): Indicates suction positioning
All dimensions are approximate. Structure measurements must be verified against the unit to ensure proper fit.

Go to Table of Contents

TSEA72

Material : AcrylX

Min: 31 Gal / 140 L
Max: 44 Gal / 200 L

Features

- 1-piece tub shower without roof cap
- Integrated shelf, headrest and soap dish

TSEA72 - 140103

SKU	System	Color	Configuration	Dimensions & Weight	Packaging	MSRP
140103-000-002-001	Soaker - No System	White	Left Drain	71 3/4” x 35 3/4” x 75” / 162 lb	125 ft^3	$ 2926
140103-000-002-002			Right Drain			$ 2926
140103-001-002-001	Whirlpool [1 4]		Left Drain			$ 4713
140103-001-002-002			Right Drain			$ 4713

COMMON OPTIONS

SKU	Description	MSRP
OPT10053	One chromatherapy light (factory installed) [54]	$ 790
OPT10095	Water heater assembly for whirlpool and combined systems (factory installed)	$ 1033
OPT10106-084	Metal trim kit for whirlpool and combined systems (factory installed) Available colors: Chrome **(084)** and Brushed Nickel **(105)**	$ 728
OPT10106-105		$ 728
OPT20137-004	Cable-operated waste and overflow (16 in. to 22 in.) (included in product packaging when purchased) Available colors: White **(001)**, Bone **(004)**, Chrome **(084)** and Brushed Nickel **(105)**	$ 362
OPT20137-084		$ 362
OPT20137-105		$ 362
OPT20137-001		$ 362

ACCESSORIES

SKU	Description	MSRP
10006887-105	Metal trim kit for Whirlpool and combined systems (sold separately) Available colors: Chrome **(084)** and Brushed Nickel **(105)**	$ 728
10006887-084		$ 728
10022491-004	Cable-operated waste and overflow (16 in. to 22 in.) (sold separately) Available colors: White **(001)**, Bone **(004)**, Chrome **(084)** and Brushed Nickel **(105)**	$ 362

FOOTNOTES

No	Description
1	Components for standard colour units equipped with systems are colour-coordinated. Trim kit and/or air push with metallic finish can be added (additional charge applies). For non-standard colour units, please specify trim kit and/or air push colour (additional charge applies for metallic finishes). Please note that the positioning of the system’s control could be in conflict with the door if one was installed on the unit. To insure compatibility, please contact customer service.
4	For details on pump position and requirements, see technical drawings on https://www.maax.com. When there is a pump position A or B indicated on the technical drawing, please specify position when ordering.
54	A selection of units come with an access panel by default when equipped with a system. However, if the unit is only equipped with chromatherapy, the access panel will not be provided by default.

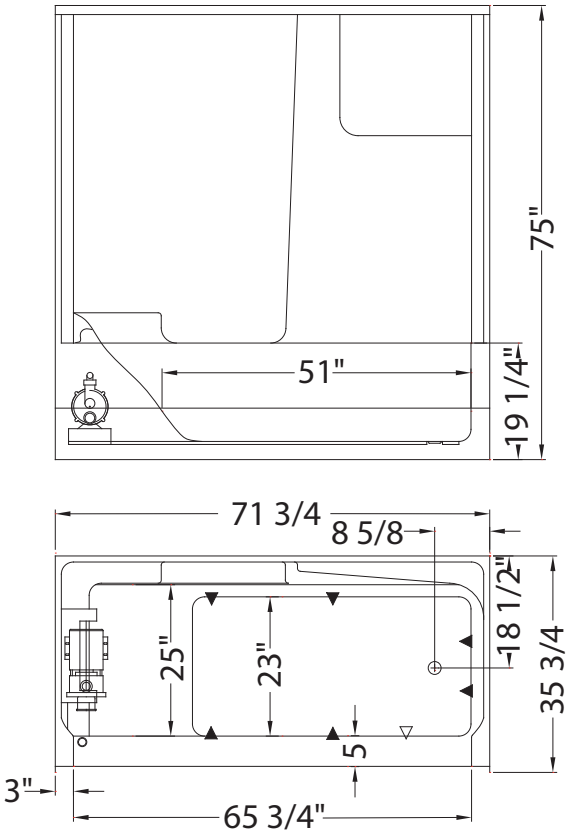

(▲) : Indicates Whirlpool jets positioning
(△) : Indicates suction positioning
All dimensions are approximate. Structure measurements must be verified against the unit to ensure proper fit.

Go to Table of Contents

TSO6042

Material : AcrylX

Min: 41 Gal / 186 L
Max: 57 Gal / 259 L

Features

- 1-piece tub shower without roof cap
- Integrated soap dishes
- Centre drain

TSO6042 - 140105

SKU	System	Color	Configuration	Dimensions & Weight	Packaging	MSRP
140105-000-002-000	Soaker - No System	White	Center Drain	60” x 42” x 72” / 130 lb	117 ft^3	$ 2459
140105-001-002-000	Whirlpool [1 4]					$ 4246

COMMON OPTIONS

SKU	Description	MSRP
OPT10053	One chromatherapy light (factory installed) [54]	$ 790
OPT10106-084	Metal trim kit for whirlpool and combined systems (factory installed) Available colors: Chrome **(084)** and Brushed Nickel **(105)**	$ 728
OPT10106-105		$ 728
OPT20137-004	Cable-operated waste and overflow (16 in. to 22 in.) (included in product packaging when purchased) Available colors: White **(001)**, Bone **(004)**, Chrome **(084)** and Brushed Nickel **(105)**	$ 362
OPT20137-084		$ 362
OPT20137-105		$ 362
OPT20137-001		$ 362

ACCESSORIES

SKU	Description	MSRP
10004306-001	White foam cushion with 2 suction pads (sold separately) Available color: White **(001)**	$ 138
10006887-105	Metal trim kit for Whirlpool and combined systems (sold separately) Available colors: Chrome **(084)** and Brushed Nickel **(105)**	$ 728
10006887-084		$ 728
10022491-004	Cable-operated waste and overflow (16 in. to 22 in.) (sold separately) Available colors: White **(001)**, Bone **(004)**, Chrome **(084)** and Brushed Nickel **(105)**	$ 362

FOOTNOTES

No	Description
1	Components for standard colour units equipped with systems are colour-coordinated. Trim kit and/or air push with metallic finish can be added (additional charge applies). For non-standard colour units, please specify trim kit and/or air push colour (additional charge applies for metallic finishes). Please note that the positioning of the system’s control could be in conflict with the door if one was installed on the unit. To insure compatibility, please contact customer service.
4	For details on pump position and requirements, see technical drawings on https://www.maax.com. When there is a pump position A or B indicated on the technical drawing, please specify position when ordering.
54	A selection of units come with an access panel by default when equipped with a system. However, if the unit is only equipped with chromatherapy, the access panel will not be provided by default.

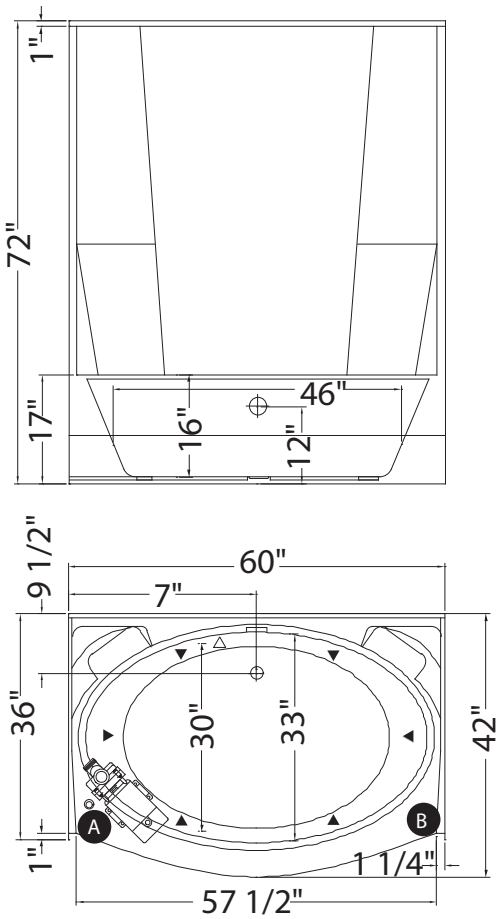

Ⓐ : Standard blower and/or pump location
Ⓑ : Optional blower and/or pump location
(▲) : Indicates Whirlpool jets positioning
(△) : Indicates suction positioning

All dimensions are approximate. Structure measurements must be verified against the unit to ensure proper fit.

TSTEA Plus

Material : AcrylX

Min: 29 Gal / 137 L
Max: 40 Gal / 185 L

Features

- 1-piece tub shower without roof cap
- Integrated wide shelves
- 8 in. tile pattern
- 20 in. apron, 13 3/8 in. deep bathing well
- Above-the-Floor Rough
- Optional wall reinforcement and grab bars

TSTEA PLUS - 105930

SKU	System	Color	Configuration	Dimensions & Weight	Packaging	MSRP
105930-000-002-001	Soaker - No System	White	Left Drain	59 3/4” x 32” x 78” / 123 lb	91.3 ft³	$ 2408
105930-000-002-002			Right Drain			$ 2408
105930-L-001-002	Whirlpool [1 4]		Left Drain			$ 4195
105930-R-001-002			Right Drain			$ 4195

COMMON OPTIONS

SKU	Description	MSRP
OPT20203-R-084	18 in. Modern straight grab bar [30] **OPT 20203-R-XXX Vertical grab bar on right wall** Available colours: White **(002)**, Chrome **(084)** and Brushed Nickel **(105)**	$ 283
OPT20203-R-002		$ 283
OPT20203-R-105		$ 283
OPT20204-B-002	24 in. Modern straight grab bar [30] **OPT 20204-B-XXX Horizontal grab bar on back wall** Available colours: White **(002)**, Chrome **(084)** and Brushed Nickel **(105)**	$ 331
OPT20204-B-084		$ 331
OPT20204-B-105		$ 331
OPT20204-L-084	24 in. Modern straight grab bar [30] **OPT 20204-L-XXX Vertical grab bar on left wall** Available colours: White **(002)**, Chrome **(084)** and Brushed Nickel **(105)**	$ 331
OPT20204-L-105		$ 331
OPT20204-L-002		$ 331
OPT20204-R-002	24 in. Modern straight grab bar [30] **OPT 20204-R-XXX Vertical grab bar on right wall** Available colours: White **(002)**, Chrome **(084)** and Brushed Nickel **(105)**	$ 331
OPT20204-R-084		$ 331
OPT20204-R-105		$ 331
OPT20212-B	Back Wall reinforcement for future grab installation [33]	$ 105
OPT20212-L	Left Wall reinforcement for future grab installation [33]	$ 105
OPT20212-R	Right Wall reinforcement for future grab installation [33]	$ 105
OPT10053	One chromatherapy light (factory installed) [54]	$ 790
OPT10095	Water heater assembly for whirlpool and combined systems (factory installed)	$ 1033
OPT10106-084	Metal trim kit for whirlpool and combined systems (factory installed) Available colors: Chrome **(084)** and Brushed Nickel **(105)**	$ 728
OPT10106-105		$ 728
OPT20137-004	Cable-operated waste and overflow (16 in. to 22 in.) (included in product packaging when purchased) Available colors: White **(001)**, Bone **(004)**, Chrome **(084)** and Brushed Nickel **(105)**	$ 362
OPT20137-084		$ 362
OPT20137-105		$ 362
OPT20137-001		$ 362
OPT20203-B-002	18 in. Modern straight grab bar [30] **OPT 20203-B-XXX Horizontal grab bar on back wall** Available colours: White **(002)**, Chrome **(084)** and Brushed Nickel **(105)**	$ 283
OPT20203-B-105		$ 283
OPT20203-B-084		$ 283
OPT20203-L-105	18 in. Modern straight grab bar [30] **OPT 20203-L-XXX Vertical grab bar on left wall** Available colours: White **(002)**, Chrome **(084)** and Brushed Nickel **(105)**	$ 283

COMMON OPTIONS

SKU	Description	MSRP
OPT20203-L-002	18 in. Modern straight grab bar [30]	$ 283
OPT20203-L-084	**OPT 20203-L-XXX Vertical grab bar on left wall** Available colours: White **(002)**, Chrome **(084)** and Brushed Nickel **(105)**	$ 283

ACCESSORIES

SKU	Description	MSRP
10004306-001	White foam cushion with 2 suction pads (sold separately) Available color: White **(001)**	$ 138
10006887-105	Metal trim kit for Whirlpool and combined systems (sold separately) Available colors: Chrome **(084)** and Brushed Nickel **(105)**	$ 728
10006887-084		$ 728
10022491-004	Cable-operated waste and overflow (16 in. to 22 in.) (sold separately) Available colors: White **(001)**, Bone **(004)**, Chrome **(084)** and Brushed Nickel **(105)**	$ 362

FOOTNOTES

No	Description
1	Components for standard colour units equipped with systems are colour-coordinated. Trim kit and/or air push with metallic finish can be added (additional charge applies). For non-standard colour units, please specify trim kit and/or air push colour (additional charge applies for metallic finishes). Please note that the positioning of the system's control could be in conflict with the door if one was installed on the unit. To insure compatibility, please contact customer service.
4	For details on pump position and requirements, see technical drawings on https://www.maax.com. When there is a pump position A or B indicated on the technical drawing, please specify position when ordering.
30	Please see technical drawings on https://www.maax.com for grab bar and/or seat positioning.
33	Please see technical drawings on https://www.maax.com for reinforcement positioning and size.
54	A selection of units come with an access panel by default when equipped with a system. However, if the unit is only equipped with chromatherapy, the access panel will not be provided by default.

RECOMMENDED DOORS - VISIT OUR WEBSITE FOR A COMPLETE LIST OF RECOMMENDED DOORS

SKU	Product Name	Pag.
139351	Incognito 57 56-59 x 56 3/4 in. 6mm Tub Door	1007
139354	Incognito 57 56-59 x 56 3/4 in. 8mm Tub Door	1011
135330	Incognito 57 Shaker 56-59 x 56 3/4 in. 8mm Tub Door	1005
136270	Duel 56-59 x 55 1/2-59	1003
105409	Mika 54 - 59 ½ x 55 in.	1015

Go to Table of Contents

STANDARD

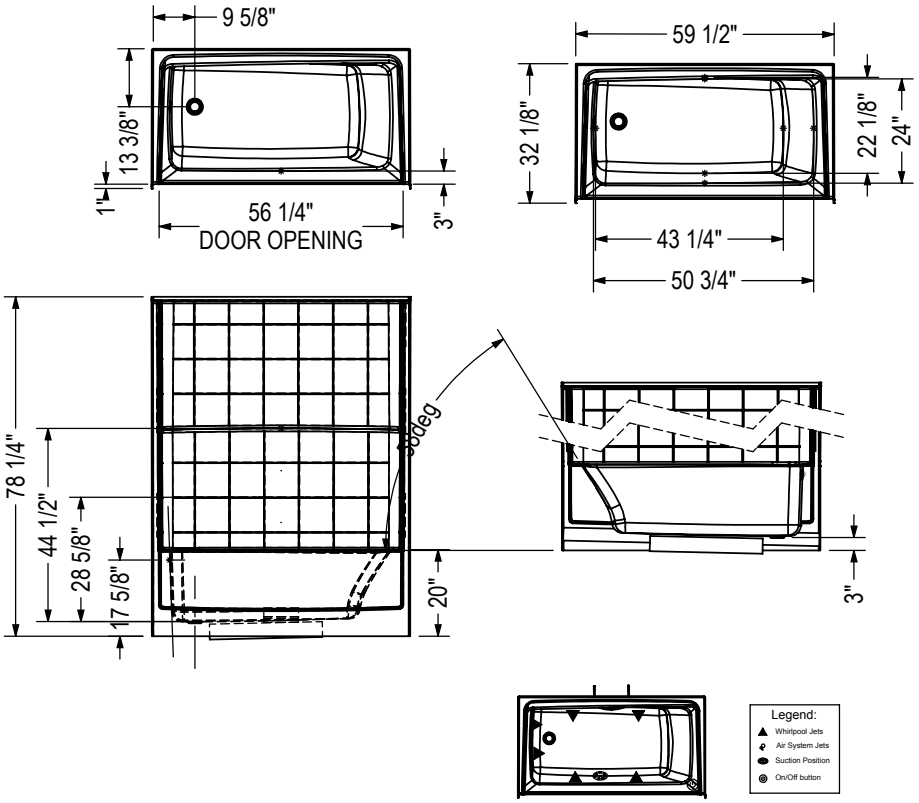

REINFORCEMENT BACKING

SIDE WALL

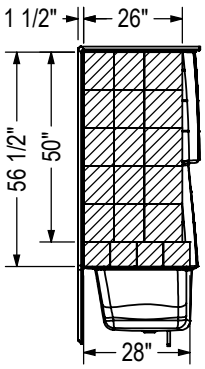

BACK WALL

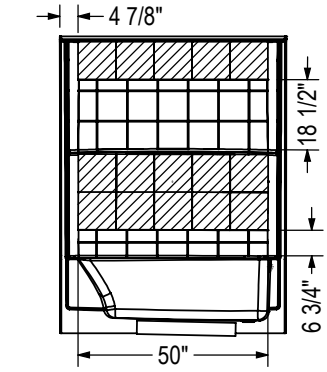

GRAB BARS

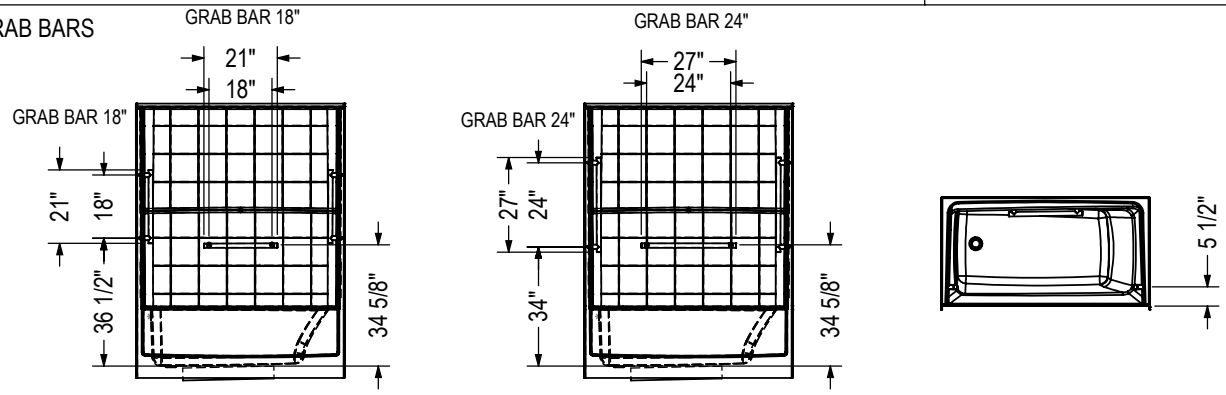

All dimensions are approximate. Structure measurements must be verified against the unit to ensure proper fit.

Showers

AlliaTS 6034 – Incognito-Matte Black

Stamina 48-I (1-piece)

Material : Acrylic

Features

- Spacious shower with improved ergonomics
- 1 or 3-piece shower with roof cap
- Integrated shelves, specify Chrome or Brushed Nickel guard rail [56]
- 12-in. acrylic grab bar [28] and soap dishes included
- Customize the shower: specify right or left seat
- Optional roof halogen light
- For White shower, grab bar is color-coordinated. For all other shower colors, please specify grab bar color (Chrome Brushed Nickel without extra charge), see accessories.

STAMINA 48-I (1-PIECE) - 101139

SKU	Color	Configuration	Dimensions & Weight	Packaging	MSRP
101139-000-001-100	White	Center Drain / Left Seat	51” x 35 3/4” x 85 1/4” / 160 lb	89 ft³	$ 3306
101139-000-001-104		Center Drain / Right Seat			$ 3306

COMMON OPTIONS

SKU	Description	MSRP
OPT10109-084	Metallic finish grab bar replacing Acrylic grab bar Available colors: Chrome **(084)** and Brushed Nickel **(105)**	$ 345
OPT10109-105		$ 345

ACCESSORIES

SKU	Description	MSRP
10000041-105	**Shower Drain (sold separately)** **PVC quick caulking shower drain, compression type** **Specify grid color: Chrome (084) or Brushed Nickel (105)**	$ 59
10000041-084		$ 59
10000043-084	**Shower Drain (sold separately)** **2-piece ABS shower drain with Chrome stainless steel grid**	$ 54
10033258	Single shower light 120V (sold separately)	$ 491
10004349-001	ABS shower drain with ABS grid (sold separately) Available color: White **(001)** and Bone **(004)**	$ 21
10004349-004		$ 21

FOOTNOTES

No	Description
28	Handles for standard colour units are colour-coordinated. Handles with metallic finish can be added (additional charge applies). For non-standard colour units, please specify handle colour (additional charge applies for metallic finishes).
56	This unit includes integrated shelves with a guard rail. Please specify a chrome or brushed nickel finish for the guard rail in your order.

RECOMMENDED DOORS - VISIT OUR WEBSITE FOR A COMPLETE LIST OF RECOMMENDED DOORS

SKU	Product Name	Pag.
134562	Kameleon 40-44 x 71 - 6mm	825
134662	Kameleon SC 40-44 x 71 - 6mm	816
134563	Kameleon 43-47 x 71 - 6mm	822
105413	Polar 42-47 ½ x 68 in.	845
134674	Kameleon SC 43-47 x 71 - 8mm	820
134571	Kameleon 43-47 x 71 - 8mm	827
134663	Kameleon SC 43-47 x 71 - 6mm	818

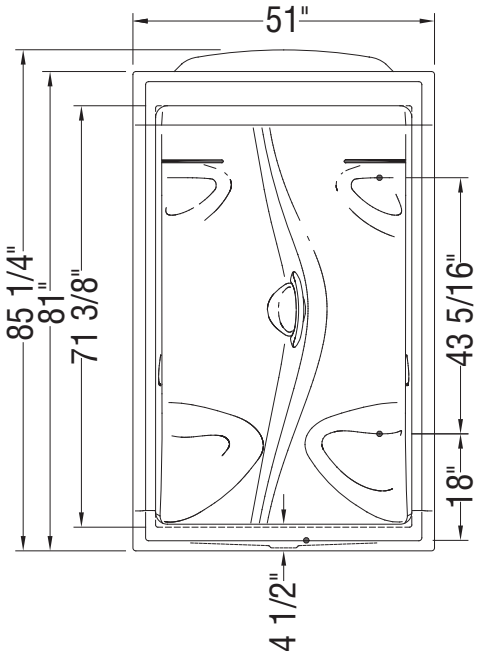

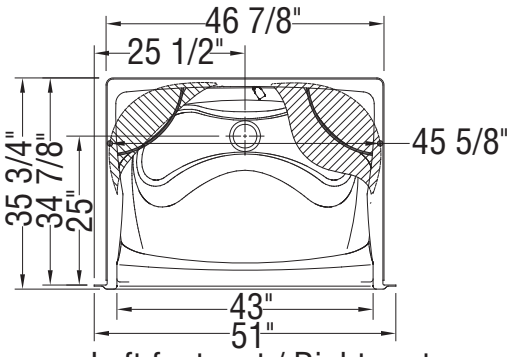

Left foot rest / Right seat

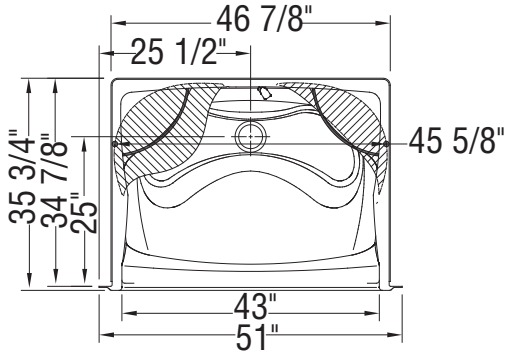

Left seat / Right foot rest

Flat surface for the installation of the valve 8-in. diameter

All dimensions are approximate. Structure measurements must be verified against the unit to ensure proper fit.

Go to Table of Contents

Stamina 60-I (1-piece)

Material : Acrylic

Features

- Spacious shower with improved ergonomics
- 1 or 3-piece shower with roof cap
- 12 in. acrylic grab bar [28] and soap dish included
- Customize the shower: specify R/L or 2 seats
- Integrated shelves, specify Chrome or Brushed Nickel guard rail [56]

STAMINA 60-I (1-PIECE) - 101141

SKU	Color	Configuration	Dimensions & Weight	Packaging	MSRP
101141-000-001-102	White	Left Drain / Left Seat	59 1/2” x 35 3/4” x 85 1/4” / 167 lb	104 ft³	$ 3390
101141-000-001-106		Right Drain / Right Seat			$ 3390
101141-000-001-110		Left Drain / Left and Right Seat			$ 3390
101141-000-001-111		Right Drain / Left and Right Seat			$ 3390

COMMON OPTIONS

SKU	Description	MSRP
OPT10109-084	Metallic finish grab bar replacing Acrylic grab bar Available colors: Chrome **(084)** and Brushed Nickel **(105)**	$ 345
OPT10109-105		$ 345

ACCESSORIES

SKU	Description	MSRP
10000041-105	**Shower Drain (sold separately)** **PVC quick caulking shower drain, compression type** **Specify grid color: Chrome (084) or Brushed Nickel (105)**	$ 59
10000041-084		$ 59
10000043-084	**Shower Drain (sold separately)** **2-piece ABS shower drain with Chrome stainless steel grid**	$ 54
10033258	Single shower light 120V (sold separately)	$ 491
10004349-001	ABS shower drain with ABS grid (sold separately) Available color: White **(001)** and Bone **(004)**	$ 21
10004349-004		$ 21

FOOTNOTES

No	Description
28	Handles for standard colour units are colour-coordinated. Handles with metallic finish can be added (additional charge applies). For non-standard colour units, please specify handle colour (additional charge applies for metallic finishes).
56	This unit includes integrated shelves with a guard rail. Please specify a chrome or brushed nickel finish for the guard rail in your order.

RECOMMENDED DOORS - VISIT OUR WEBSITE FOR A COMPLETE LIST OF RECOMMENDED DOORS

SKU	Product Name	Pag.
134564	Kameleon 51-55 x 71 - 6mm	825
134664	Kameleon SC 51-55 x 71 - 6mm	816

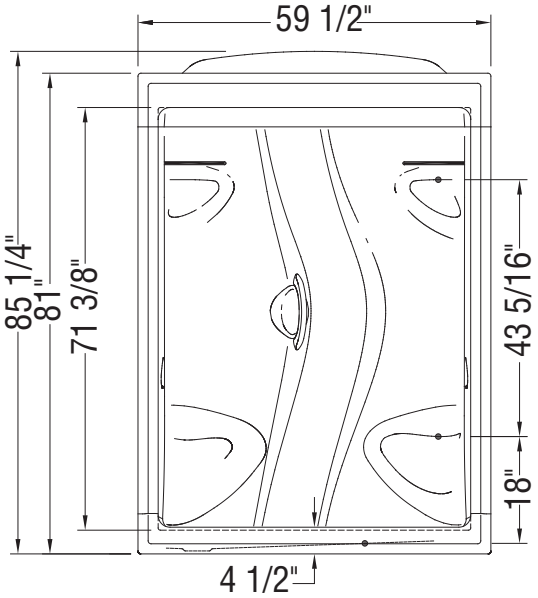

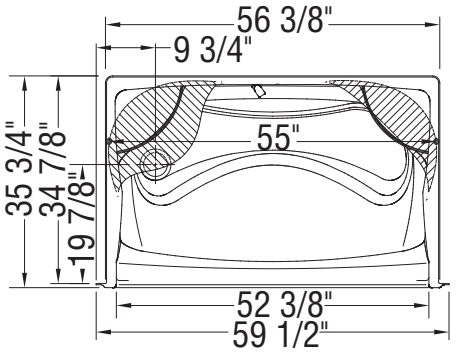

Left seat / Right foot rest

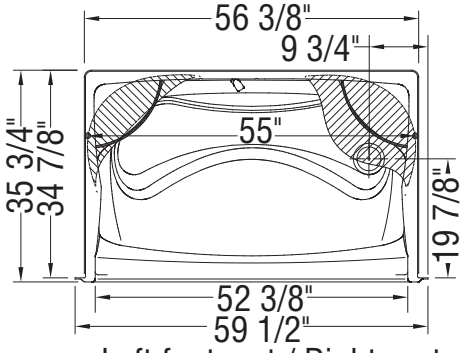

Left foot rest / Right seat

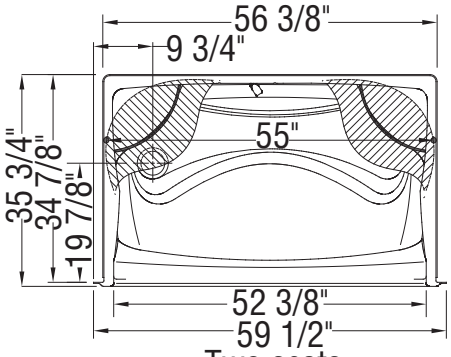

Two seats

Flat surface for the installation of the valve 8-in. diameter

All dimensions are approximate. Structure measurements must be verified against the unit to ensure proper fit.

Go to Table of Contents

Allia SH-3636 (1-piece)

Material : Acrylic

Features

- Thermoformed cast acrylic for improved durability
- Smooth walls for a modern and minimalist look
- Center drain
- 1-piece construction for reliable water containment
- Compatible with a wide range of MAAX Products
- Above-the-Floor Rough (AFR) : No
- Perfect for small bathrooms
- Integrated storage solution for all your bath essentials
- 25 years warranty

ALLIA SH-3636 (1-PIECE) - 107007

SKU	Color	Configuration	Dimensions & Weight	Packaging	MSRP
107007-000-001-000	White	Center Drain / No Seat Seat	36” x 36” x 79” / 117 lb	62.14 ft^3	$ 2417

ALLIA SH-3636 (2-PIECE) - 107007S

SKU	Color	Configuration	Dimensions & Weight	Packaging	MSRP
107007-000-001-003	White	Center Drain	36” x 36 1/2” x 79” / 117 lb	62.99 ft^3	$ 2993

COMMON OPTIONS

SKU	Description	MSRP
OPT20203-B-002	18 in. Modern straight grab bar [30] **OPT 20203-B-XXX Horizontal grab bar on back wall** Available colours: White **(002)**, Chrome **(084)** and Brushed Nickel **(105)**	$ 283
OPT20203-B-105		$ 283
OPT20203-B-084		$ 283
OPT20203-L-105	18 in. Modern straight grab bar [30] **OPT 20203-L-XXX Vertical grab bar on left wall** Available colours: White **(002)**, Chrome **(084)** and Brushed Nickel **(105)**	$ 283
OPT20203-L-002		$ 283
OPT20203-L-084		$ 283
OPT20203-R-084	18 in. Modern straight grab bar [30] **OPT 20203-R-XXX Vertical grab bar on right wall** Available colours: White **(002)**, Chrome **(084)** and Brushed Nickel **(105)**	$ 283
OPT20203-R-002		$ 283
OPT20203-R-105		$ 283
OPT20204-L-084	24 in. Modern straight grab bar [30] **OPT 20204-L-XXX Vertical grab bar on left wall** Available colours: White **(002)**, Chrome **(084)** and Brushed Nickel **(105)**	$ 331
OPT20204-L-105		$ 331
OPT20204-L-002		$ 331
OPT20204-R-002	24 in. Modern straight grab bar [30] **OPT 20204-R-XXX Vertical grab bar on right wall** Available colours: White **(002)**, Chrome **(084)** and Brushed Nickel **(105)**	$ 331
OPT20204-R-084		$ 331
OPT20204-R-105		$ 331
OPT20212-B	Back Wall reinforcement for future grab installation [33]	$ 105
OPT20212-L	Left Wall reinforcement for future grab installation [33]	$ 105
OPT20212-R	Right Wall reinforcement for future grab installation [33]	$ 105
OPT20408-L-105	Package A [30] **OPT 20408-L-XXX Vertical grab bar on left wall, horizontal grab bar on back wall** Package includes : • 24 in. Vertical grab bar on side wall • 18 in. Horizontal grab bar on back wall Available colours: White **(002)**, Chrome **(084)** and Brushed Nickel **(105)**	$ 584
OPT20408-L-002		$ 584
OPT20408-L-084		$ 584
OPT20408-R-084	Package A [30] **OPT 20408-R-XXX Vertical grab bar on Right wall, horizontal grab bar on back wall** Package includes : • 24 in. Vertical grab bar on side wall • 18 in. Horizontal grab bar on back wall Available colours: White **(002)**, Chrome **(084)** and Brushed Nickel **(105)**	$ 584

Go to Table of Contents

COMMON OPTIONS

SKU	Description	MSRP
OPT20408-R-002	Package A [30] **OPT 20408-R-XXX Vertical grab bar on Right wall, horizontal grab bar on back wall** Package includes : • 24 in. Vertical grab bar on side wall • 18 in. Horizontal grab bar on back wall Available colours: White **(002)**, Chrome **(084)** and Brushed Nickel **(105)**	$ 584
OPT20408-R-105		$ 584
OPT10189	Three-wall reinforcement for future grab bar installation [33]	$ 305
OPT20055-106	36 in. curtain rod with installation kit Available color: Stainless Steel **(106)**	$ 194

ACCESSORIES

SKU	Description	MSRP
10000041-105	**Shower Drain (sold separately)** **PVC quick caulking shower drain, compression type** **Specify grid color: Chrome (084) or Brushed Nickel (105)**	$ 59
10000041-084		$ 59
10000043-084	**Shower Drain (sold separately)** **2-piece ABS shower drain with Chrome stainless steel grid**	$ 54
10004349-001	ABS shower drain with ABS grid (sold separately) Available color: White **(001)** and Bone **(004)**	$ 21
10004349-004		$ 21
10028765-105	24 in. modern straight grab bar [36] Specify color: White **(002)**, Chrome **(084)**, Brushed Nickel **(105)**	$ 315
10028765-084		$ 315
10028765-002		$ 315
10029996-084	18 in. modern straight grab bar with flange (front installation) Specify colour: White **(002)**, Chrome **(084)**, Brushed Nickel **(105)**	$ 331
10029996-002		$ 331
10029996-105		$ 331
10029997-002	24 in. modern straight grab bar with flange (front installation) Specify color: White **(002)**, Chrome **(084)**, Brushed Nickel **(105)**	$ 378
10029997-105		$ 378
10029997-084		$ 378

FOOTNOTES

No	Description
30	Please see technical drawings on https://www.maax.com for grab bar and/or seat positioning.
33	Please see technical drawings on https://www.maax.com for reinforcement positioning and size.
36	Rear access grab bar installation. Must be secured onto unit prior to alcove unit insert.
36	

RECOMMENDED DOORS - VISIT OUR WEBSITE FOR A COMPLETE LIST OF RECOMMENDED DOORS

SKU	Product Name	Pag.
138263	Manhattan 29-31 x 68 - 6mm	888
105416	Madono 28 ½-30 ½ x 67 - 6mm	886
136645	Pivolok 29-30 ¾ x 64 ½ in.	896

STANDARD
1 PIECE MODEL SHOWN

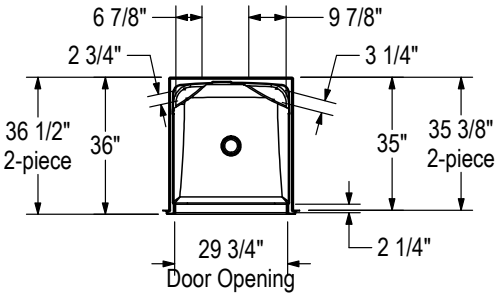

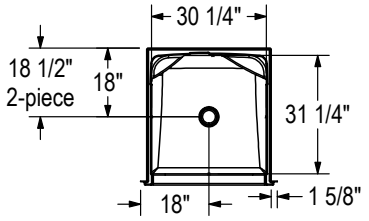

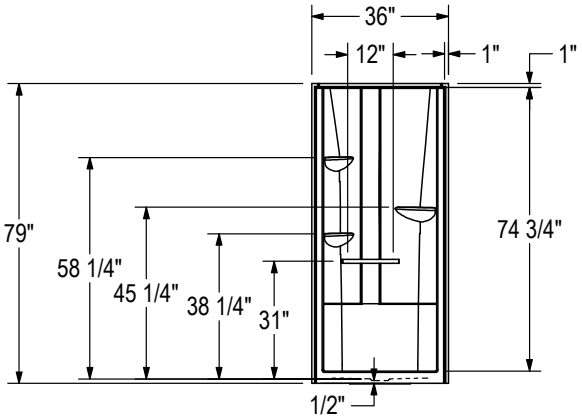

All dimensions are approximate. Structure measurements must be verified against the unit to ensure proper fit.

OPTIONAL REINFORCEMENT
(Left shown, Right symmetrical)

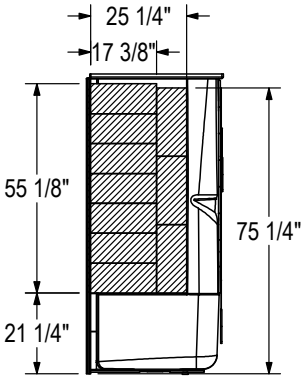

OPTIONAL REINFORCEMENT
(Back Wall)

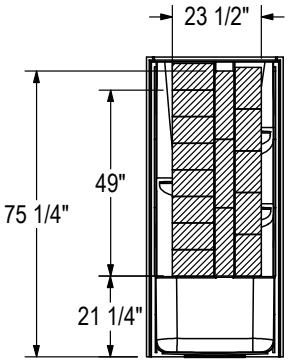

Go to Table of Contents

Allia SH-4834 (1-piece)

Material : Acrylic

Features

- Thermoformed cast acrylic for improved durability
- Smooth walls for a modern and minimalist look
- Center drain
- 1-piece construction for reliable water containment
- Compatible with a wide range of MAAX Products
- Above-the-Floor Rough (AFR) : No
- Available with a molded seat for added comfort and safety during showering
- Integrated storage solution for all your bath essentials
- 25 years warranty

ALLIA SH-4834 (1-PIECE) - 107005

SKU	Color	Configuration	Dimensions & Weight	Packaging	MSRP
107005-000-001-000	White	Center Drain / No Seat Seat	48” x 34” x 79” / 128 lb	77.78 ft^3	$ 2619
107005-000-001-001		Center Drain / Left Seat			$ 2619
107005-000-001-002		Center Drain / Right Seat			$ 2619

ALLIA SH-4834 (2-PIECE) - 107005S

SKU	Color	Configuration	Dimensions & Weight	Packaging	MSRP
107005-000-001-003	White	Center Drain / No Seat Seat	48” x 34 1/2” x 79” / 128 lb	78.91 ft^3	$ 3240
107005-000-001-004		Center Drain / Left Seat			$ 3240
107005-000-001-005		Center Drain / Right Seat			$ 3240

COMMON OPTIONS

SKU	Description	MSRP
OPT10189	Three-wall reinforcement for future grab bar installation [33]	$ 305
OPT20054-106	48 in. curtain rod with installation kit Available color: Stainless Steel **(106)**	$ 219
OPT20203-B-002	18 in. Modern straight grab bar [30] **OPT 20203-B-XXX Horizontal grab bar on back wall** Available colours: White **(002)**, Chrome **(084)** and Brushed Nickel **(105)**	$ 283
OPT20203-B-105		$ 283
OPT20203-B-084		$ 283
OPT20203-L-105	18 in. Modern straight grab bar [30] **OPT 20203-L-XXX Vertical grab bar on left wall** Available colours: White **(002)**, Chrome **(084)** and Brushed Nickel **(105)**	$ 283
OPT20203-L-002		$ 283
OPT20203-L-084		$ 283
OPT20203-R-084	18 in. Modern straight grab bar [30] **OPT 20203-R-XXX Vertical grab bar on right wall** Available colours: White **(002)**, Chrome **(084)** and Brushed Nickel **(105)**	$ 283
OPT20203-R-002		$ 283
OPT20203-R-105		$ 283
OPT20204-B-002	24 in. Modern straight grab bar [30] **OPT 20204-B-XXX Horizontal grab bar on back wall** Available colours: White **(002)**, Chrome **(084)** and Brushed Nickel **(105)**	$ 331
OPT20204-B-084		$ 331
OPT20204-B-105		$ 331
OPT20204-L-084	24 in. Modern straight grab bar [30] **OPT 20204-L-XXX Vertical grab bar on left wall** Available colours: White **(002)**, Chrome **(084)** and Brushed Nickel **(105)**	$ 331
OPT20204-L-105		$ 331
OPT20204-L-002		$ 331
OPT20204-R-002	24 in. Modern straight grab bar [30] **OPT 20204-R-XXX Vertical grab bar on right wall** Available colours: White **(002)**, Chrome **(084)** and Brushed Nickel **(105)**	$ 331
OPT20204-R-084		$ 331
OPT20204-R-105		$ 331
OPT20212-B	Back Wall reinforcement for future grab installation [33]	$ 105
OPT20212-L	Left Wall reinforcement for future grab installation [33]	$ 105
OPT20212-R	Right Wall reinforcement for future grab installation [33]	$ 105

COMMON OPTIONS

SKU	Description	MSRP
OPT20218-L-002	23 in. Curved grab bar (back wall) [30], [31] **OPT20218-L-XXX Left-hand curved grab bar on back wall** Available colours: White **(002)**, Chrome **(084)** and Brushed Nickel **(105)**	$ 537
OPT20218-L-084		$ 537
OPT20218-L-105		$ 537
OPT20218-R-002	23 in. Curved grab bar (back wall) [30], [31] **OPT20218-R-XXX Right-hand curved grab bar on back wall** Available colours: White **(002)**, Chrome **(084)** and Brushed Nickel **(105)**	$ 537
OPT20218-R-084		$ 537
OPT20218-R-105		$ 537
OPT20219-L-084	Pivot grab bar (back wall) [3032] **OPT 20219-L-XXX Left-hand pivot grab bar on back wall** Available colours: Chrome **(084)**	$ 2030
OPT20219-R-084	Pivot grab bar (back wall) [3032] **OPT 20219-R-XXX Right-hand pivot grab bar on back wall** Available colours: Chrome **(084)**	$ 2030
OPT20405-L-105	Package A [30] **OPT 20405-L-XXX Vertical grab bar on left wall, horizontal grab bar on back wall** Package includes : • 24 in. Vertical grab bar on side wall • 24 in. Horizontal grab bar on back wall Available colours: White **(002)**, Chrome **(084)** and Brushed Nickel **(105)**	$ 584
OPT20405-L-084		$ 584
OPT20405-L-002		$ 584
OPT20405-R-002	Package A [30] **OPT 20405-R-XXX Vertical grab bar on right wall, horizontal grab bar on back wall** Package includes : • 24 in. Vertical grab bar on side wall • 24 in. Horizontal grab bar on back wall Available colours: White **(002)**, Chrome **(084)** and Brushed Nickel **(105)**	$ 584
OPT20405-R-084		$ 584
OPT20405-R-105		$ 584
OPT20406-L-084	Package B [3031] **OPT 20406-L-XXX Vertical grab bar on left wall, left-hand curved grab bar on back wall** Package includes : • 24 in. Vertical grab bar on side wall • 23 in. Curved grab bar on back wall Available colours: White **(002)**, Chrome **(084)** and Brushed Nickel **(105)**	$ 776
OPT20406-L-002		$ 776
OPT20406-L-105		$ 776
OPT20406-R-002	Package B [3031] **OPT 20406-R-XXX Vertical grab bar on right wall, right-hand curved grab bar on back wall** Package includes : • 24 in. Vertical grab bar on side wall • 23 in. Curved grab bar on back wall Available colours: White **(002)**, Chrome **(084)** and Brushed Nickel **(105)**	$ 776
OPT20406-R-084		$ 776
OPT20406-R-105		$ 776
OPT20407-L-084	Package C [3032] **OPT 20407-L-XXX 2 x Vertical grab bars on side walls, left-hand pivot grab bar on back wall** Package includes : • 2 x 24 in. Vertical grab bar on side walls • Pivot grab bar on back walll Available colours: Chrome **(084)**	$ 2509
OPT20407-R-084	Package C [3032] **OPT 20407-R-XXX 2 x Vertical grab bars on side walls, right-hand pivot grab bar on back wall** Package includes : • 2 x 24 in. Vertical grab bar on side walls • Pivot grab bar on back walll Available colours: Chrome **(084)**	$ 2509

ACCESSORIES

SKU	Description	MSRP
10000041-105	**Shower Drain (sold separately)** **PVC quick caulking shower drain, compression type** **Specify grid color: Chrome (084) or Brushed Nickel (105)**	$ 59
10000041-084		$ 59
10029997-002	24 in. modern straight grab bar with flange (front installation) Specify color: White **(002)**, Chrome **(084)**, Brushed Nickel **(105)**	$ 378
10029997-105		$ 378
10029997-084		$ 378
10030093-084	23 in. Curved left-hand grab bar with flange (front installation) Specify colour: White **(002)**, Chrome **(084)**, Brushed Nickel **(105)**	$ 536
10030093-002		$ 536
10030093-105		$ 536
10030094-084	23 in. Curved right-hand grab bar with flange (front installation) Specify colour: White **(002)**, Chrome **(084)**, Brushed Nickel **(105)**	$ 536
10030094-105		$ 536
10030094-002		$ 536
10000043-084	**Shower Drain (sold separately)** **2-piece ABS shower drain with Chrome stainless steel grid**	$ 54
10004349-001	ABS shower drain with ABS grid (sold separately) Available color: White **(001)** and Bone **(004)**	$ 21

ACCESSORIES

SKU	Description	MSRP
10004349-004	ABS shower drain with ABS grid (sold separately) Available color: White **(001)** and Bone **(004)**	$ 21
10028765-105	24 in. modern straight grab bar [36] Specify color: White **(002)**, Chrome **(084)**, Brushed Nickel **(105)**	$ 315
10028765-084		$ 315
10028765-002		$ 315
10029251-084	23 in. Left hand curved grab bar [36] Left refers to the upper section of the curved bar Specify color: White **(002)**, Chrome **(084)**, Brushed Nickel **(105)**	$ 493
10029251-105		$ 493
10029251-002		$ 493
10029252-002	23 in. Right hand curved grab bar [36] Right refers to the upper section of the curved bar Specify color: White **(002)**, Chrome **(084)**, Brushed Nickel **(105)**	$ 493
10029252-084		$ 493
10029252-105		$ 493
10029996-084	18 in. modern straight grab bar with flange (front installation) Specify colour: White **(002)**, Chrome **(084)**, Brushed Nickel **(105)**	$ 331
10029996-002		$ 331
10029996-105		$ 331

FOOTNOTES

No	Description
30	Please see technical drawings on https://www.maax.com for grab bar and/or seat positioning.
31	Right (R)/Left (L) refers to the upper section of the ergonomic grab bar.
32	Right/Left refers to the pivot direction of the bar (from closed to open position).
33	Please see technical drawings on https://www.maax.com for reinforcement positioning and size.
36	Rear access grab bar installation. Must be secured onto unit prior to alcove unit insert.
36	

RECOMMENDED DOORS - VISIT OUR WEBSITE FOR A COMPLETE LIST OF RECOMMENDED DOORS

SKU	Product Name	Pag.
138269	Manhattan 41-43 x 68 - 6mm	891
138520	Incognito 74 39-42 x 74 in. 8mm Shower Door	835
139577	Reveal Sleek 71 41 1/2-44 1/2 x 71 1/2 - 8mm	904
134562	Kameleon 40-44 x 71 - 6mm	825
134662	Kameleon SC 40-44 x 71 - 6mm	816
136677	Reveal 71 41 ½-44 ½ x 71 ½ - 8mm	901

STANDARD
1 PIECE MODEL SHOWN

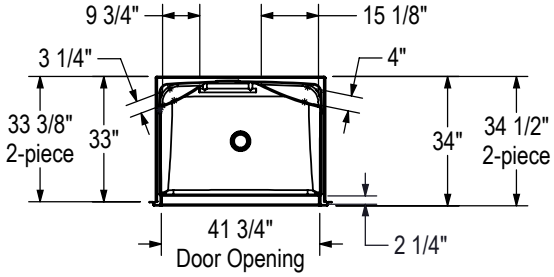

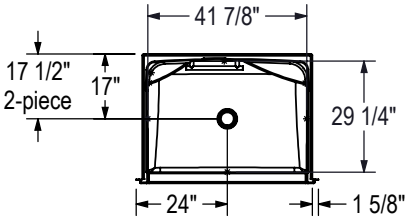

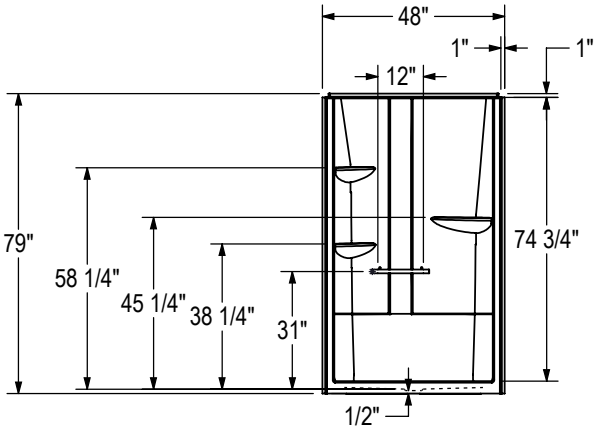

All dimensions are approximate. Structure measurements must be verified against the unit to ensure proper fit.

OPTIONAL REINFORCEMENT
(Left shown)

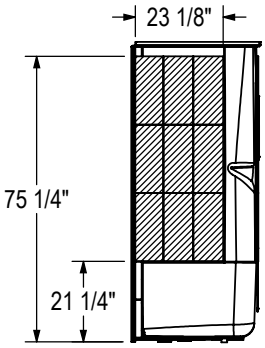

OPTIONNAL REINFORCEMENT
(Back Wall)

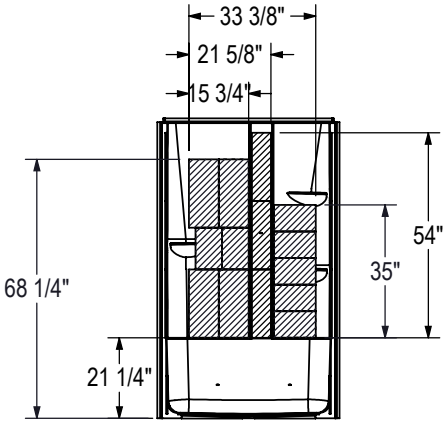

Allia SH-6034 (1-piece)

Material : Acrylic

Features

- Thermoformed cast acrylic for improved durability
- Smooth walls for a modern and minimalist look
- Right, left or center drain
- 1-piece construction for reliable water containment
- Compatible with a wide range of MAAX Products
- Above-the-Floor Rough (AFR) : No
- Available with one or two molded seats for added comfort and safety during showering
- Integrated storage solution for all your bath essentials
- 25 years warranty

ALLIA SH-6034 (1-PIECE) - 107003

SKU	Color	Configuration	Dimensions & Weight	Packaging	MSRP
107003-000-001-001	White	Right Drain / Left Seat	60” x 34” x 79” / 141 lb	96.83 ft^3	$ 2998
107003-000-001-002		Left Drain / Right Seat			$ 2998
107003-000-001-136		Center Drain / No Seat Seat			$ 2998
107003-000-001-137		Center Drain / Left and Right Seat			$ 2998
107003-000-001-178		Center Drain / Left Seat			$ 2998
107003-000-001-179		Center Drain / Right Seat			$ 2998
		Left Drain / No Seat Seat			$ 2998
		Right Drain / No Seat Seat			$ 2998

ALLIA SH-6034 (2-PIECE) - 107003S

SKU	Color	Configuration	Dimensions & Weight	Packaging	MSRP
107003-000-001-004	White	Right Drain / Left Seat	60” x 34 1/2” x 79” / 141 lb	98.23 ft^3	$ 3702
107003-000-001-005		Left Drain / Right Seat			$ 3702
107003-000-001-174		Center Drain / No Seat Seat			$ 3702
107003-000-001-175		Center Drain / Left and Right Seat			$ 3702
107003-000-001-176		Right Drain / No Seat Seat			$ 3702
107003-000-001-177		Left Drain / No Seat Seat			$ 3702
107003-000-001-180		Center Drain / Left Seat			$ 3702
107003-000-001-181		Center Drain / Right Seat			$ 3702

COMMON OPTIONS

SKU	Description	MSRP
OPT10189	Three-wall reinforcement for future grab bar installation [33]	$ 305
OPT20056-106	60 in. curtain rod with installation kit Available color: Stainless Steel **(106)**	$ 248
OPT20203-B-002	18 in. Modern straight grab bar [30] **OPT 20203-B-XXX Horizontal grab bar on back wall** Available colours: White **(002)**, Chrome **(084)** and Brushed Nickel **(105)**	$ 283
OPT20203-B-105		$ 283
OPT20203-B-084		$ 283
OPT20203-L-105	18 in. Modern straight grab bar [30] **OPT 20203-L-XXX Vertical grab bar on left wall** Available colours: White **(002)**, Chrome **(084)** and Brushed Nickel **(105)**	$ 283
OPT20203-L-002		$ 283
OPT20203-L-084		$ 283
OPT20203-R-084	18 in. Modern straight grab bar [30] **OPT 20203-R-XXX Vertical grab bar on right wall** Available colours: White **(002)**, Chrome **(084)** and Brushed Nickel **(105)**	$ 283
OPT20203-R-002		$ 283
OPT20203-R-105		$ 283

COMMON OPTIONS

SKU	Description	MSRP
OPT20204-B-002	24 in. Modern straight grab bar [30] **OPT 20204-B-XXX Horizontal grab bar on back wall** Available colours: White **(002)**, Chrome **(084)** and Brushed Nickel **(105)**	$ 331
OPT20204-B-084		$ 331
OPT20204-B-105		$ 331
OPT20204-L-084	24 in. Modern straight grab bar [30] **OPT 20204-L-XXX Vertical grab bar on left wall** Available colours: White **(002)**, Chrome **(084)** and Brushed Nickel **(105)**	$ 331
OPT20204-L-105		$ 331
OPT20204-L-002		$ 331
OPT20204-R-002	24 in. Modern straight grab bar [30] **OPT 20204-R-XXX Vertical grab bar on right wall** Available colours: White **(002)**, Chrome **(084)** and Brushed Nickel **(105)**	$ 331
OPT20204-R-084		$ 331
OPT20204-R-105		$ 331
OPT20212-B	Back Wall reinforcement for future grab installation [33]	$ 105
OPT20212-L	Left Wall reinforcement for future grab installation [33]	$ 105
OPT20212-R	Right Wall reinforcement for future grab installation [33]	$ 105
OPT20216-B-002	30 in. Modern straight grab bar [30] **OPT 20216-B-XXX Horizontal grab bar on back wall** Available colours: White **(002)**, Chrome **(084)** and Brushed Nickel **(105)**	$ 378
OPT20216-B-105		$ 378
OPT20216-B-084		$ 378
OPT20216-L-002	30 in. Modern straight grab bar [30] **OPT 20216-L-XXX Vertical grab bar on left wall** Available colours: White **(002)**, Chrome **(084)** and Brushed Nickel **(105)**	$ 392
OPT20216-L-105		$ 392
OPT20216-L-084		$ 392
OPT20216-R-002	30 in. Modern straight grab bar [30] **OPT 20216-R-XXX Vertical grab bar on right wall** Available colours: White **(002)**, Chrome **(084)** and Brushed Nickel **(105)**	$ 392
OPT20216-R-105		$ 392
OPT20216-R-084		$ 392
OPT20219-L-084	Pivot grab bar (back wall) [3032] **OPT 20219-L-XXX Left-hand pivot grab bar on back wall** Available colours: Chrome **(084)**	$ 2030
OPT20219-R-084	Pivot grab bar (back wall) [3032] **OPT 20219-R-XXX Right-hand pivot grab bar on back wall** Available colours: Chrome **(084)**	$ 2030
OPT20221-L-105	Fold-down seat (factory installed) [30], [34], [35] **OPT 20221-L-XXX Left side wall** Specify trimming colour: White **(002)**, Chrome **(084)**, Brushed Nickel **(105)**	$ 610
OPT20221-L-002		$ 610
OPT20221-L-084		$ 610
OPT20221-R-002	Fold-down seat (factory installed) [30], [34], [35] **OPT 20221-R-XXX Reft side wall** Specify trimming colour: White **(002)**, Chrome **(084)**, Brushed Nickel **(105)**	$ 610
OPT20221-R-105		$ 610
OPT20221-R-084		$ 610
OPT20403-L-105	Package A [30] **OPT 20403-L-XXX Vertical grab bar on left wall, horizontal grab bar on back wall** Package includes : • 24 in. Vertical grab bar on side wall • 30 in. Horizontal grab bar on back wall Available colours: White **(002)**, Chrome **(084)** and Brushed Nickel **(105)**	$ 584
OPT20403-L-002		$ 584
OPT20403-L-084		$ 584
OPT20403-R-084	Package A [30] **OPT 20403-R-XXX Vertical grab bar on right wall, horizontal grab bar on back wall** Package includes : • 24 in. Vertical grab bar on side wall • 30 in. Horizontal grab bar on back wall Available colours: White **(002)**, Chrome **(084)** and Brushed Nickel **(105)**	$ 584
OPT20403-R-002		$ 584
OPT20403-R-105		$ 584
OPT20404-L-105	Package B [30], [31] **OPT 20404-L-XXX Vertical grab bar on left wall, left-hand curved grab bar on back wall** Package includes : • 24 in. Vertical grab bar on side wall • 32 in. Horizontal grab bar on back wall Available colors: White **(002)**, Chrome **(084)** and Brushed Nickel **(105)**	$ 776
OPT20404-L-084		$ 776
OPT20404-L-002		$ 776
OPT20404-R-002	Package B [30], [31] **OPT 20404-R-XXX Vertical grab bar on right wall, right-hand curved grab bar on back wall** Package includes : • 24 in. Vertical grab bar on side wall • 32 in. Horizontal grab bar on back wall Available colors: White **(002)**, Chrome **(084)** and Brushed Nickel **(105)**	$ 776
OPT20404-R-084		$ 776
OPT20404-R-105		$ 776
OPT20407-L-084	Package C [3032] **OPT 20407-L-XXX 2 x Vertical grab bars on side walls, left-hand pivot grab bar on back wall** Package includes : • 2 x 24 in. Vertical grab bar on side walls • Pivot grab bar on back walll Available colours: Chrome **(084)**	$ 2509

COMMON OPTIONS

SKU	Description	MSRP
OPT20407-R-084	Package C [3032] **OPT 20407-R-XXX 2 x Vertical grab bars on side walls, right-hand pivot grab bar on back wall** Package includes : • 2 x 24 in. Vertical grab bar on side walls • Pivot grab bar on back walll Available colours: Chrome **(084)**	$ 2509
OPT20217-L-105	32 in. Curved grab bar (back wall) [3031] **OPT 20217-L-XXX Left-hand curved grab bar on back wall** Available colours: White **(002)**, Chrome **(084)** and Brushed Nickel **(105)**	$ 584
OPT20217-L-002		$ 584
OPT20217-L-084		$ 584
OPT20217-R-002	32 in. Curved grab bar (back wall) [3031] **OPT 20217-R-XXX Right-hand curved grab bar on back wall** Available colours: White **(002)**, Chrome **(084)** and Brushed Nickel **(105)**	$ 584
OPT20217-R-105		$ 584
OPT20217-R-084		$ 584

ACCESSORIES

SKU	Description	MSRP
10000041-105	**Shower Drain (sold separately)** **PVC quick caulking shower drain, compression type** **Specify grid color: Chrome (084) or Brushed Nickel (105)**	$ 59
10000041-084		$ 59
10029997-002	24 in. modern straight grab bar with flange (front installation) Specify color: White **(002)**, Chrome **(084)**, Brushed Nickel **(105)**	$ 378
10029997-105		$ 378
10029997-084		$ 378
10029998-084	30 in. modern straight grab bar with flange (front installation) Specify colour: White **(002)**, Chrome **(084)**, Brushed Nickel **(105)**	$ 403
10029998-002		$ 403
10029998-105		$ 403
10030095-002	32 in. curved left-hand grab bar with flange (front installation) Specify colour: White **(002)**, Chrome **(084)**, Brushed Nickel **(105)**	$ 581
10030095-084		$ 581
10030095-105		$ 581
10030097-084	32 in. curved right-hand grab bar with flange (front installation) Specify colour: White **(002)**, Chrome **(084)**, Brushed Nickel **(105)**	$ 581
10030097-002		$ 581
10030097-105		$ 581
10000043-084	**Shower Drain (sold separately)** **2-piece ABS shower drain with Chrome stainless steel grid**	$ 54
10004349-001	ABS shower drain with ABS grid (sold separately) Available color: White **(001)** and Bone **(004)**	$ 21
10004349-004		$ 21
10028765-105	24 in. modern straight grab bar [36] Specify color: White **(002)**, Chrome **(084)**, Brushed Nickel **(105)**	$ 315
10028765-084		$ 315
10028765-002		$ 315
10028917-002	Rectangular fold-down White polyurethane seat [37] Available trimming colours: White **(002)**, Chrome **(084)** and Brushed Nickel **(105)**	$ 581
10028917-084		$ 581
10028917-105		$ 581
10029248-105	30 in. Modern straight grab bar [36] Specify color: White **(002)**, Chrome **(084)**, Brushed Nickel **(105)**	$ 359
10029248-002		$ 359
10029248-084		$ 359
10029253-002	32 in. Left hand curved grab bar [36] Left refers to the upper section of the curved bar Specify color: White **(002)**, Chrome **(084)**, Brushed Nickel **(105)**	$ 536
10029253-084		$ 536
10029253-105		$ 536
10029254-084	32 in. Right hand curved grab bar [36] Right refers to the upper section of the curved bar Specify color: White **(002)**, Chrome **(084)**, Brushed Nickel **(105)**	$ 536
10029254-002		$ 536
10029254-105		$ 536

FOOTNOTES

No	Description
30	Please see technical drawings on https://www.maax.com for grab bar and/or seat positioning.
31	Right (R)/Left (L) refers to the upper section of the ergonomic grab bar.
32	Right/Left refers to the pivot direction of the bar (from closed to open position).
33	Please see technical drawings on https://www.maax.com for reinforcement positioning and size.
34	Fold-down seat only available when unit ordered with no integrated seat.
35	Fold down seat is not available on sectional units.

FOOTNOTES

No	Description
36	Rear access grab bar installation. Must be secured onto unit prior to alcove unit insert.
36	
37	Rear access seat installation. Must be secured onto unit prior to alcove unit insert.
36	

RECOMMENDED DOORS - VISIT OUR WEBSITE FOR A COMPLETE LIST OF RECOMMENDED DOORS

SKU	Product Name	Pag.
138275	Manhattan 53-55 x 68 - 6mm	892
138521	Incognito 74 51-54 x 74 in. 8mm Shower Door	835
139579	Reveal Sleek 71 51 1/2-54 1/2 x 71 1/2 - 8mm	904
134564	Kameleon 51-55 x 71 - 6mm	825
134664	Kameleon SC 51-55 x 71 - 6mm	816
136883	Reveal 71 51 ½-54 ½ x 71 ½ - 8mm	901

STANDARD
(Center Drain shown)
1-PIECE MODEL SHOWN

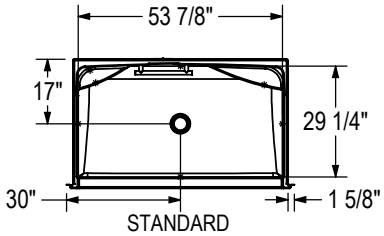

STANDARD
(Left shown)
1-PIECE MODEL SHOWN

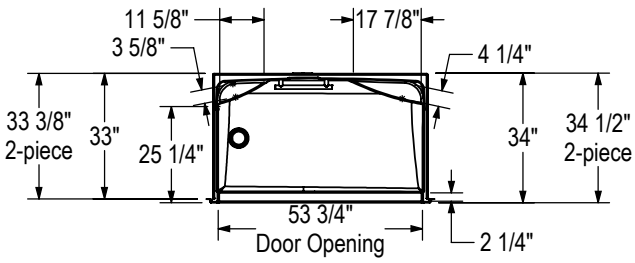

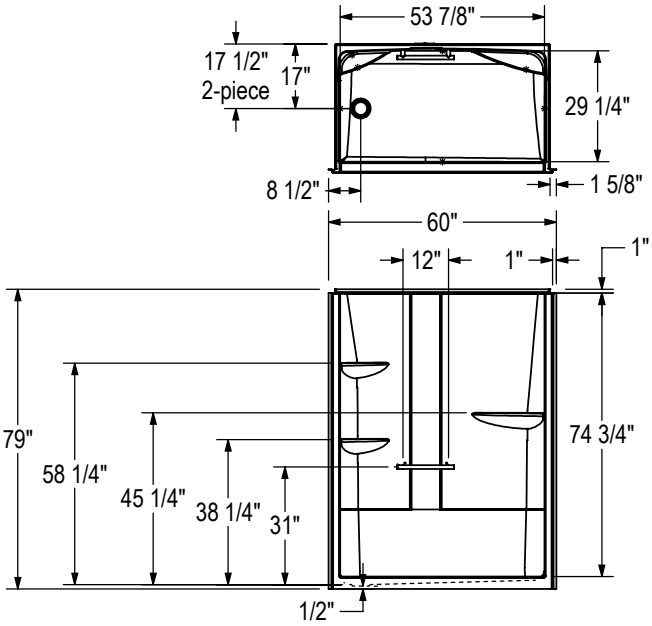

All dimensions are approximate. Structure measurements must be verified against the unit to ensure proper fit.

OPTIONAL REINFORCEMENT
(Left shown)

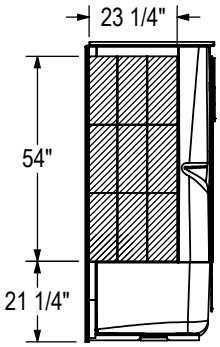

OPTIONAL REINFORCEMENT
(Back Wall)

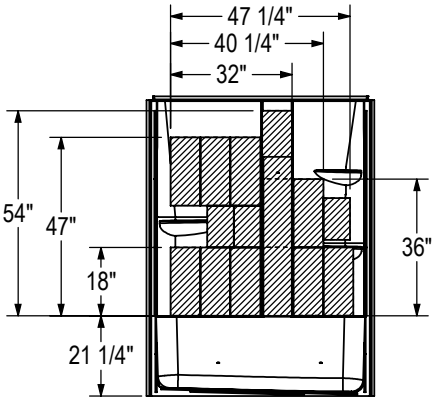

Allia SHR-3636 1-piece

Material : Acrylic

Features

- Thermoformed cast acrylic for improved durability
- Smooth walls for a modern and minimalist look
- Center drain
- 1-piece construction for reliable water containment
- Compatible with a wide range of MAAX Products
- Above-the-Floor Rough (AFR) : No
- Perfect for small bathrooms
- Integrated storage solution for all your bath essentials
- 25 years warranty

ALLIA SHR-3636 (1-PIECE) - 107006

SKU	Color	Configuration	Dimensions & Weight	Packaging	MSRP
107006-000-001-000	White	Center Drain / No Seat Seat	36” x 35 1/4” x 88” / 132 lb	67.75 ft^3	$ 2570

ALLIA SHR-3636 (3-PIECE) - 107006S

SKU	Color	Configuration	Dimensions & Weight	Packaging	MSRP
107006-000-001-003	White	Center Drain	36” x 36 1/2” x 88” / 132 lb	70.12 ft^3	$ 3113

COMMON OPTIONS

SKU	Description	MSRP
OPT20203-B-002	18 in. Modern straight grab bar [30] **OPT 20203-B-XXX Horizontal grab bar on back wall** Available colours: White **(002)**, Chrome **(084)** and Brushed Nickel **(105)**	$ 283
OPT20203-B-105		$ 283
OPT20203-B-084		$ 283
OPT20203-L-105	18 in. Modern straight grab bar [30] **OPT 20203-L-XXX Vertical grab bar on left wall** Available colours: White **(002)**, Chrome **(084)** and Brushed Nickel **(105)**	$ 283
OPT20203-L-002		$ 283
OPT20203-L-084		$ 283
OPT20203-R-084	18 in. Modern straight grab bar [30] **OPT 20203-R-XXX Vertical grab bar on right wall** Available colours: White **(002)**, Chrome **(084)** and Brushed Nickel **(105)**	$ 283
OPT20203-R-002		$ 283
OPT20203-R-105		$ 283
OPT20204-B-002	24 in. Modern straight grab bar [30] **OPT 20204-B-XXX Horizontal grab bar on back wall** Available colours: White **(002)**, Chrome **(084)** and Brushed Nickel **(105)**	$ 331
OPT20204-B-084		$ 331
OPT20204-B-105		$ 331
OPT20204-L-084	24 in. Modern straight grab bar [30] **OPT 20204-L-XXX Vertical grab bar on left wall** Available colours: White **(002)**, Chrome **(084)** and Brushed Nickel **(105)**	$ 331
OPT20204-L-105		$ 331
OPT20204-L-002		$ 331
OPT20204-R-002	24 in. Modern straight grab bar [30] **OPT 20204-R-XXX Vertical grab bar on right wall** Available colours: White **(002)**, Chrome **(084)** and Brushed Nickel **(105)**	$ 331
OPT20204-R-084		$ 331
OPT20204-R-105		$ 331
OPT20212-B	Back Wall reinforcement for future grab installation [33]	$ 105
OPT20212-L	Left Wall reinforcement for future grab installation [33]	$ 105
OPT20212-R	Right Wall reinforcement for future grab installation [33]	$ 105
OPT20408-L-105	Package A [30] **OPT 20408-L-XXX Vertical grab bar on left wall, horizontal grab bar on back wall** Package includes : • 24 in. Vertical grab bar on side wall • 18 in. Horizontal grab bar on back wall Available colours: White **(002)**, Chrome **(084)** and Brushed Nickel **(105)**	$ 584

COMMON OPTIONS

SKU	Description	MSRP
OPT20408-L-002	Package A [30] **OPT 20408-L-XXX Vertical grab bar on left wall, horizontal grab bar on back wall** Package includes : • 24 in. Vertical grab bar on side wall • 18 in. Horizontal grab bar on back wall Available colours: White **(002)**, Chrome **(084)** and Brushed Nickel **(105)**	$ 584
OPT20408-L-084		$ 584
OPT20408-R-084	Package A [30] **OPT 20408-R-XXX Vertical grab bar on Right wall, horizontal grab bar on back wall** Package includes : • 24 in. Vertical grab bar on side wall • 18 in. Horizontal grab bar on back wall Available colours: White **(002)**, Chrome **(084)** and Brushed Nickel **(105)**	$ 584
OPT20408-R-002		$ 584
OPT20408-R-105		$ 584
OPT10189	Three-wall reinforcement for future grab bar installation [33]	$ 305
OPT20055-106	36 in. curtain rod with installation kit Available color: Stainless Steel **(106)**	$ 194

ACCESSORIES

SKU	Description	MSRP
10000041-105	**Shower Drain (sold separately)** **PVC quick caulking shower drain, compression type** **Specify grid color: Chrome (084) or Brushed Nickel (105)**	$ 59
10000041-084		$ 59
10000043-084	**Shower Drain (sold separately)** **2-piece ABS shower drain with Chrome stainless steel grid**	$ 54
10004349-001	ABS shower drain with ABS grid (sold separately) Available color: White **(001)** and Bone **(004)**	$ 21
10004349-004		$ 21
10028765-105	24 in. modern straight grab bar [36] Specify color: White **(002)**, Chrome **(084)**, Brushed Nickel **(105)**	$ 315
10028765-084		$ 315
10028765-002		$ 315
10029996-084	18 in. modern straight grab bar with flange (front installation) Specify colour: White **(002)**, Chrome **(084)**, Brushed Nickel **(105)**	$ 331
10029996-002		$ 331
10029996-105		$ 331
10029997-002	24 in. modern straight grab bar with flange (front installation) Specify color: White **(002)**, Chrome **(084)**, Brushed Nickel **(105)**	$ 378
10029997-105		$ 378
10029997-084		$ 378

FOOTNOTES

No	Description
30	Please see technical drawings on https://www.maax.com for grab bar and/or seat positioning.
33	Please see technical drawings on https://www.maax.com for reinforcement positioning and size.
36	Rear access grab bar installation. Must be secured onto unit prior to alcove unit insert.
36	

RECOMMENDED DOORS - VISIT OUR WEBSITE FOR A COMPLETE LIST OF RECOMMENDED DOORS

SKU	Product Name	Pag.
138263	Manhattan 29-31 x 68 - 6mm	888
105416	Madono 28 ½-30 ½ x 67 - 6mm	886
136645	Pivolok 29-30 ¾ x 64 ½ in.	896

STANDARD
1-PIECE MODEL SHOWN

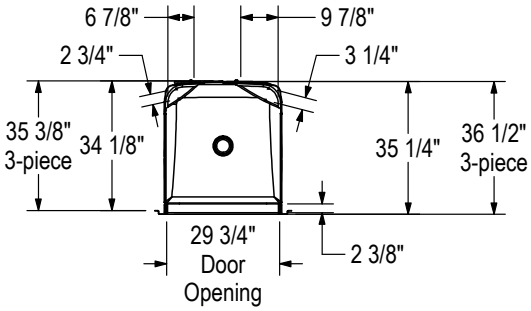

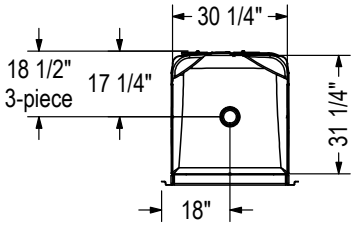

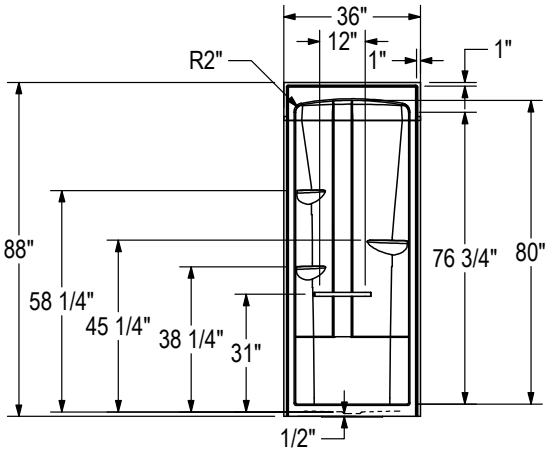

All dimensions are approximate. Structure measurements must be verified against the unit to ensure proper fit.

OPTIONAL REINFORCEMENT
(Left shown, Right symmetrical)

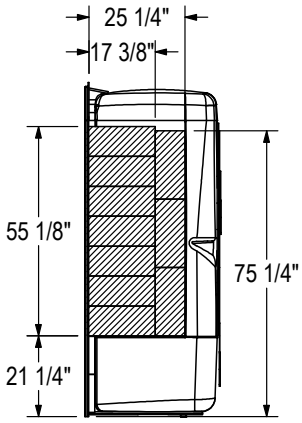

OPTIONAL REINFORCEMENT
(Back Wall)

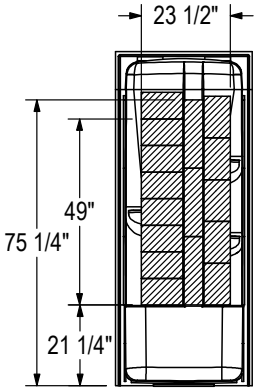

Go to Table of Contents

Allia SHR-4834 (1-piece)

Material : Acrylic

Features

- Thermoformed cast acrylic for improved durability
- Smooth walls for a modern and minimalist look
- Center drain
- 1-piece construction for reliable water containment
- Compatible with a wide range of MAAX Products
- Above-the-Floor Rough (AFR) : No
- Available with a molded seat for added comfort and safety during showering
- Integrated storage solution for all your bath essentials
- 25 years warranty

ALLIA SHR-4834 (1-PIECE) - 107004

SKU	Color	Configuration	Dimensions & Weight	Packaging	MSRP
107004-000-001-000	White	Center Drain / No Seat Seat	48” x 33 1/4” x 88” / 144 lb	84.7 ft³	$ 2788
107004-000-001-001		Center Drain / Left Seat			$ 2788
107004-000-001-002		Center Drain / Right Seat			$ 2788

ALLIA SHR-4834 (3-PIECE) - 107004S

SKU	Color	Configuration	Dimensions & Weight	Packaging	MSRP
107004-000-001-003	White	Center Drain / No Seat Seat	48” x 34 1/2” x 88” / 144 lb	87.84 ft³	$ 3379
107004-000-001-004		Center Drain / Left Seat			$ 3379
107004-000-001-005		Center Drain / Right Seat			$ 3379

COMMON OPTIONS

SKU	Description	MSRP
OPT10189	Three-wall reinforcement for future grab bar installation [33]	$ 305
OPT20054-106	48 in. curtain rod with installation kit Available color: Stainless Steel **(106)**	$ 219
OPT20203-B-002	18 in. Modern straight grab bar [30] **OPT 20203-B-XXX Horizontal grab bar on back wall** Available colours: White **(002)**, Chrome **(084)** and Brushed Nickel **(105)**	$ 283
OPT20203-B-105		$ 283
OPT20203-B-084		$ 283
OPT20203-L-105	18 in. Modern straight grab bar [30] **OPT 20203-L-XXX Vertical grab bar on left wall** Available colours: White **(002)**, Chrome **(084)** and Brushed Nickel **(105)**	$ 283
OPT20203-L-002		$ 283
OPT20203-L-084		$ 283
OPT20203-R-084	18 in. Modern straight grab bar [30] **OPT 20203-R-XXX Vertical grab bar on right wall** Available colours: White **(002)**, Chrome **(084)** and Brushed Nickel **(105)**	$ 283
OPT20203-R-002		$ 283
OPT20203-R-105		$ 283
OPT20204-B-002	24 in. Modern straight grab bar [30] **OPT 20204-B-XXX Horizontal grab bar on back wall** Available colours: White **(002)**, Chrome **(084)** and Brushed Nickel **(105)**	$ 331
OPT20204-B-084		$ 331
OPT20204-B-105		$ 331
OPT20204-L-084	24 in. Modern straight grab bar [30] **OPT 20204-L-XXX Vertical grab bar on left wall** Available colours: White **(002)**, Chrome **(084)** and Brushed Nickel **(105)**	$ 331
OPT20204-L-105		$ 331
OPT20204-L-002		$ 331
OPT20204-R-002	24 in. Modern straight grab bar [30] **OPT 20204-R-XXX Vertical grab bar on right wall** Available colours: White **(002)**, Chrome **(084)** and Brushed Nickel **(105)**	$ 331
OPT20204-R-084		$ 331
OPT20204-R-105		$ 331
OPT20212-B	Back Wall reinforcement for future grab installation [33]	$ 105
OPT20212-L	Left Wall reinforcement for future grab installation [33]	$ 105
OPT20212-R	Right Wall reinforcement for future grab installation [33]	$ 105

COMMON OPTIONS

SKU	Description	MSRP
OPT20218-L-002	23 in. Curved grab bar (back wall) [30], [31] **OPT20218-L-XXX Left-hand curved grab bar on back wall** Available colours: White **(002)**, Chrome **(084)** and Brushed Nickel **(105)**	$ 537
OPT20218-L-084		$ 537
OPT20218-L-105		$ 537
OPT20218-R-002	23 in. Curved grab bar (back wall) [30], [31] **OPT20218-R-XXX Right-hand curved grab bar on back wall** Available colours: White **(002)**, Chrome **(084)** and Brushed Nickel **(105)**	$ 537
OPT20218-R-084		$ 537
OPT20218-R-105		$ 537
OPT20219-L-084	Pivot grab bar (back wall) [3032] **OPT 20219-L-XXX Left-hand pivot grab bar on back wall** Available colours: Chrome **(084)**	$ 2030
OPT20219-R-084	Pivot grab bar (back wall) [3032] **OPT 20219-R-XXX Right-hand pivot grab bar on back wall** Available colours: Chrome **(084)**	$ 2030
OPT20221-L-105	Fold-down seat (factory installed) [30], [34], [35] **OPT 20221-L-XXX Left side wall** Specify trimming colour: White **(002)**, Chrome **(084)**, Brushed Nickel **(105)**	$ 610
OPT20221-L-002		$ 610
OPT20221-L-084		$ 610
OPT20221-R-002	Fold-down seat (factory installed) [30], [34], [35] **OPT 20221-R-XXX Reft side wall** Specify trimming colour: White **(002)**, Chrome **(084)**, Brushed Nickel **(105)**	$ 610
OPT20221-R-105		$ 610
OPT20221-R-084		$ 610
OPT20405-L-105	Package A [30] **OPT 20405-L-XXX Vertical grab bar on left wall, horizontal grab bar on back wall** Package includes : • 24 in. Vertical grab bar on side wall • 24 in. Horizontal grab bar on back wall Available colours: White **(002)**, Chrome **(084)** and Brushed Nickel **(105)**	$ 584
OPT20405-L-084		$ 584
OPT20405-L-002		$ 584
OPT20405-R-002	Package A [30] **OPT 20405-R-XXX Vertical grab bar on right wall, horizontal grab bar on back wall** Package includes : • 24 in. Vertical grab bar on side wall • 24 in. Horizontal grab bar on back wall Available colours: White **(002)**, Chrome **(084)** and Brushed Nickel **(105)**	$ 584
OPT20405-R-084		$ 584
OPT20405-R-105		$ 584
OPT20406-L-084	Package B [3031] **OPT 20406-L-XXX Vertical grab bar on left wall, left-hand curved grab bar on back wall** Package includes : • 24 in. Vertical grab bar on side wall • 23 in. Curved grab bar on back wall Available colours: White **(002)**, Chrome **(084)** and Brushed Nickel **(105)**	$ 776
OPT20406-L-002		$ 776
OPT20406-L-105		$ 776
OPT20406-R-002	Package B [3031] **OPT 20406-R-XXX Vertical grab bar on right wall, right-hand curved grab bar on back wall** Package includes : • 24 in. Vertical grab bar on side wall • 23 in. Curved grab bar on back wall Available colours: White **(002)**, Chrome **(084)** and Brushed Nickel **(105)**	$ 776
OPT20406-R-084		$ 776
OPT20406-R-105		$ 776
OPT20407-L-084	Package C [3032] **OPT 20407-L-XXX 2 x Vertical grab bars on side walls, left-hand pivot grab bar on back wall** Package includes : • 2 x 24 in. Vertical grab bar on side walls • Pivot grab bar on back walll Available colours: Chrome **(084)**	$ 2509
OPT20407-R-084	Package C [3032] **OPT 20407-R-XXX 2 x Vertical grab bars on side walls, right-hand pivot grab bar on back wall** Package includes : • 2 x 24 in. Vertical grab bar on side walls • Pivot grab bar on back walll Available colours: Chrome **(084)**	$ 2509

ACCESSORIES

SKU	Description	MSRP
10029996-084	18 in. modern straight grab bar with flange (front installation) Specify colour: White **(002)**, Chrome **(084)**, Brushed Nickel **(105)**	$ 331
10029996-002		$ 331
10029996-105		$ 331
10029997-002	24 in. modern straight grab bar with flange (front installation) Specify color: White **(002)**, Chrome **(084)**, Brushed Nickel **(105)**	$ 378
10029997-105		$ 378
10029997-084		$ 378
10030093-084	23 in. Curved left-hand grab bar with flange (front installation) Specify colour: White **(002)**, Chrome **(084)**, Brushed Nickel **(105)**	$ 536

ACCESSORIES

SKU	Description	MSRP
10030093-002	23 in. Curved left-hand grab bar with flange (front installation) Specify colour: White **(002)**, Chrome **(084)**, Brushed Nickel **(105)**	$ 536
10030093-105		$ 536
10030094-084	23 in. Curved right-hand grab bar with flange (front installation) Specify colour: White **(002)**, Chrome **(084)**, Brushed Nickel **(105)**	$ 536
10030094-105		$ 536
10030094-002		$ 536
10000041-105	**Shower Drain (sold separately)** **PVC quick caulking shower drain, compression type** **Specify grid color: Chrome (084) or Brushed Nickel (105)**	$ 59
10000041-084		$ 59
10000043-084	**Shower Drain (sold separately)** **2-piece ABS shower drain with Chrome stainless steel grid**	$ 54
10004349-001	ABS shower drain with ABS grid (sold separately) Available color: White **(001)** and Bone **(004)**	$ 21
10004349-004		$ 21
10028765-105	24 in. modern straight grab bar [36] Specify color: White **(002)**, Chrome **(084)**, Brushed Nickel **(105)**	$ 315
10028765-084		$ 315
10028765-002		$ 315
10028917-002	Rectangular fold-down White polyurethane seat [37] Available trimming colours: White **(002)**, Chrome **(084)** and Brushed Nickel **(105)**	$ 581
10028917-084		$ 581
10028917-105		$ 581
10029251-084	23 in. Left hand curved grab bar [36] Left refers to the upper section of the curved bar Specify color: White **(002)**, Chrome **(084)**, Brushed Nickel **(105)**	$ 493
10029251-105		$ 493
10029251-002		$ 493
10029252-002	23 in. Right hand curved grab bar [36] Right refers to the upper section of the curved bar Specify color: White **(002)**, Chrome **(084)**, Brushed Nickel **(105)**	$ 493
10029252-084		$ 493
10029252-105		$ 493

FOOTNOTES

No	Description
30	Please see technical drawings on https://www.maax.com for grab bar and/or seat positioning.
31	Right (R)/Left (L) refers to the upper section of the ergonomic grab bar.
32	Right/Left refers to the pivot direction of the bar (from closed to open position).
33	Please see technical drawings on https://www.maax.com for reinforcement positioning and size.
34	Fold-down seat only available when unit ordered with no integrated seat.
35	Fold down seat is not available on sectional units.
36	Rear access grab bar installation. Must be secured onto unit prior to alcove unit insert.
37	Rear access seat installation. Must be secured onto unit prior to alcove unit insert.
36	

RECOMMENDED DOORS - VISIT OUR WEBSITE FOR A COMPLETE LIST OF RECOMMENDED DOORS

SKU	Product Name	Pag.
138269	Manhattan 41-43 x 68 - 6mm	891
138520	Incognito 74 39-42 x 74 in. 8mm Shower Door	835
139577	Reveal Sleek 71 41 1/2-44 1/2 x 71 1/2 - 8mm	904
134562	Kameleon 40-44 x 71 - 6mm	825
134662	Kameleon SC 40-44 x 71 - 6mm	816
136677	Reveal 71 41 ½-44 ½ x 71 ½ - 8mm	901

STANDARD
1-PIECE MODEL SHOWN

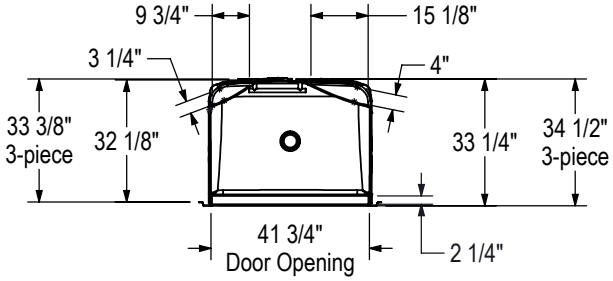

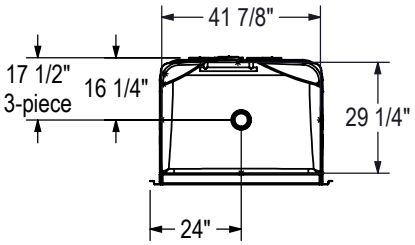

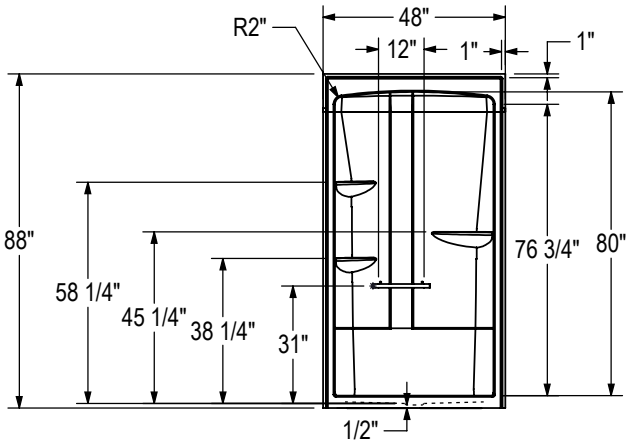

All dimensions are approximate. Structure measurements must be verified against the unit to ensure proper fit.

OPTIONAL REINFORCEMENT
(Left shown)

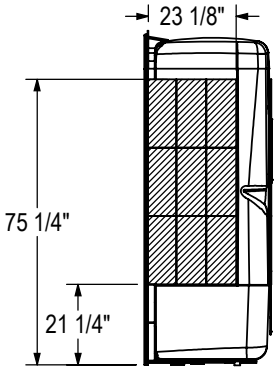

OPTIONAL REINFORCEMENT
(Back Wall)

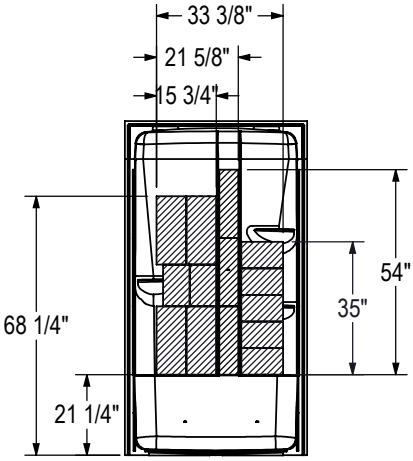

Allia SHR-6034 (1-piece)

Material : Acrylic

Features

- Thermoformed cast acrylic for improved durability
- Smooth walls for a modern and minimalist look
- Right, left or center drain
- 1-piece construction for reliable water containment
- Compatible with a wide range of MAAX Products
- Above-the-Floor Rough (AFR) : No
- Available with one or two molded seats for added comfort and safety during showering
- Integrated storage solution for all your bath essentials
- 25 years warranty

ALLIA SHR-6034 (1-PIECE) - 107002

SKU	Color	Configuration	Dimensions & Weight	Packaging	MSRP
107002-000-001-001	White	Right Drain / Left Seat	60” x 33 1/4” x 88” / 159 lb	105.44 ft^3	$ 3210
107002-000-001-002		Left Drain / Right Seat			$ 3210
107002-000-001-136		Center Drain / No Seat Seat			$ 3210
107002-000-001-137		Center Drain / Left and Right Seat			$ 3210
		Center Drain / Left Seat			$ 3210
		Left Drain / No Seat Seat			$ 3210
		Right Drain / No Seat Seat			$ 3210
		Center Drain / Right Seat			$ 3210

ALLIA SHR-6034 (3-PIECE) - 107002S

SKU	Color	Configuration	Dimensions & Weight	Packaging	MSRP
107002-000-001-004	White	Right Drain / Left Seat	60” x 34 1/2” x 88” / 159 lb	109.35 ft^3	$ 3860
107002-000-001-005		Left Drain / Right Seat			$ 3860
107002-000-001-190		Center Drain / No Seat Seat			$ 3860
107002-000-001-191		Center Drain / Left and Right Seat			$ 3860
		Center Drain / Left Seat			$ 3860
		Left Drain / No Seat Seat			$ 3860
		Right Drain / No Seat Seat			$ 3860
		Center Drain / Right Seat			$ 3860

COMMON OPTIONS

SKU	Description	MSRP
OPT10189	Three-wall reinforcement for future grab bar installation [33]	$ 305
OPT20056-106	60 in. curtain rod with installation kit Available color: Stainless Steel **(106)**	$ 248
OPT20203-B-002	18 in. Modern straight grab bar [30] **OPT 20203-B-XXX Horizontal grab bar on back wall** Available colours: White **(002)**, Chrome **(084)** and Brushed Nickel **(105)**	$ 283
OPT20203-B-105		$ 283
OPT20203-B-084		$ 283
OPT20203-L-105	18 in. Modern straight grab bar [30] **OPT 20203-L-XXX Vertical grab bar on left wall** Available colours: White **(002)**, Chrome **(084)** and Brushed Nickel **(105)**	$ 283
OPT20203-L-002		$ 283
OPT20203-L-084		$ 283
OPT20203-R-084	18 in. Modern straight grab bar [30] **OPT 20203-R-XXX Vertical grab bar on right wall** Available colours: White **(002)**, Chrome **(084)** and Brushed Nickel **(105)**	$ 283
OPT20203-R-002		$ 283
OPT20203-R-105		$ 283

COMMON OPTIONS

SKU	Description	MSRP
OPT20204-B-002	24 in. Modern straight grab bar [30] **OPT 20204-B-XXX Horizontal grab bar on back wall** Available colours: White **(002)**, Chrome **(084)** and Brushed Nickel **(105)**	$ 331
OPT20204-B-084		$ 331
OPT20204-B-105		$ 331
OPT20204-L-084	24 in. Modern straight grab bar [30] **OPT 20204-L-XXX Vertical grab bar on left wall** Available colours: White **(002)**, Chrome **(084)** and Brushed Nickel **(105)**	$ 331
OPT20204-L-105		$ 331
OPT20204-L-002		$ 331
OPT20204-R-002	24 in. Modern straight grab bar [30] **OPT 20204-R-XXX Vertical grab bar on right wall** Available colours: White **(002)**, Chrome **(084)** and Brushed Nickel **(105)**	$ 331
OPT20204-R-084		$ 331
OPT20204-R-105		$ 331
OPT20212-B	Back Wall reinforcement for future grab installation [33]	$ 105
OPT20212-L	Left Wall reinforcement for future grab installation [33]	$ 105
OPT20212-R	Right Wall reinforcement for future grab installation [33]	$ 105
OPT20216-B-002	30 in. Modern straight grab bar [30] **OPT 20216-B-XXX Horizontal grab bar on back wall** Available colours: White **(002)**, Chrome **(084)** and Brushed Nickel **(105)**	$ 378
OPT20216-B-105		$ 378
OPT20216-B-084		$ 378
OPT20216-L-002	30 in. Modern straight grab bar [30] **OPT 20216-L-XXX Vertical grab bar on left wall** Available colours: White **(002)**, Chrome **(084)** and Brushed Nickel **(105)**	$ 392
OPT20216-L-105		$ 392
OPT20216-L-084		$ 392
OPT20216-R-002	30 in. Modern straight grab bar [30] **OPT 20216-R-XXX Vertical grab bar on right wall** Available colours: White **(002)**, Chrome **(084)** and Brushed Nickel **(105)**	$ 392
OPT20216-R-105		$ 392
OPT20216-R-084		$ 392
OPT20219-L-084	Pivot grab bar (back wall) [3032] **OPT 20219-L-XXX Left-hand pivot grab bar on back wall** Available colours: Chrome **(084)**	$ 2030
OPT20219-R-084	Pivot grab bar (back wall) [3032] **OPT 20219-R-XXX Right-hand pivot grab bar on back wall** Available colours: Chrome **(084)**	$ 2030
OPT20403-L-105	Package A [30] **OPT 20403-L-XXX Vertical grab bar on left wall, horizontal grab bar on back wall** Package includes : • 24 in. Vertical grab bar on side wall • 30 in. Horizontal grab bar on back wall Available colours: White **(002)**, Chrome **(084)** and Brushed Nickel **(105)**	$ 584
OPT20403-L-002		$ 584
OPT20403-L-084		$ 584
OPT20403-R-084	Package A [30] **OPT 20403-R-XXX Vertical grab bar on right wall, horizontal grab bar on back wall** Package includes : • 24 in. Vertical grab bar on side wall • 30 in. Horizontal grab bar on back wall Available colours: White **(002)**, Chrome **(084)** and Brushed Nickel **(105)**	$ 584
OPT20403-R-002		$ 584
OPT20403-R-105		$ 584
OPT20404-L-105	Package B [30], [31] **OPT 20404-L-XXX Vertical grab bar on left wall, left-hand curved grab bar on back wall** Package includes : • 24 in. Vertical grab bar on side wall • 32 in. Horizontal grab bar on back wall Available colors: White **(002)**, Chrome **(084)** and Brushed Nickel **(105)**	$ 776
OPT20404-L-084		$ 776
OPT20404-L-002		$ 776
OPT20404-R-002	Package B [30], [31] **OPT 20404-R-XXX Vertical grab bar on right wall, right-hand curved grab bar on back wall** Package includes : • 24 in. Vertical grab bar on side wall • 32 in. Horizontal grab bar on back wall Available colors: White **(002)**, Chrome **(084)** and Brushed Nickel **(105)**	$ 776
OPT20404-R-084		$ 776
OPT20404-R-105		$ 776
OPT20407-L-084	Package C [3032] **OPT 20407-L-XXX 2 x Vertical grab bars on side walls, left-hand pivot grab bar on back wall** Package includes : • 2 x 24 in. Vertical grab bar on side walls • Pivot grab bar on back walll Available colours: Chrome **(084)**	$ 2509
OPT20407-R-084	Package C [3032] **OPT 20407-R-XXX 2 x Vertical grab bars on side walls, right-hand pivot grab bar on back wall** Package includes : • 2 x 24 in. Vertical grab bar on side walls • Pivot grab bar on back walll Available colours: Chrome **(084)**	$ 2509
OPT20217-L-105	32 in. Curved grab bar (back wall) [3031] **OPT 20217-L-XXX Left-hand curved grab bar on back wall** Available colours: White **(002)**, Chrome **(084)** and Brushed Nickel **(105)**	$ 584

COMMON OPTIONS

SKU	Description	MSRP
OPT20217-L-002	32 in. Curved grab bar (back wall) [3031] **OPT 20217-L-XXX Left-hand curved grab bar on back wall** Available colours: White **(002)**, Chrome **(084)** and Brushed Nickel **(105)**	$ 584
OPT20217-L-084		$ 584
OPT20217-R-002	32 in. Curved grab bar (back wall) [3031] **OPT 20217-R-XXX Right-hand curved grab bar on back wall** Available colours: White **(002)**, Chrome **(084)** and Brushed Nickel **(105)**	$ 584
OPT20217-R-105		$ 584
OPT20217-R-084		$ 584

ACCESSORIES

SKU	Description	MSRP
10029997-002	24 in. modern straight grab bar with flange (front installation) Specify color: White **(002)**, Chrome **(084)**, Brushed Nickel **(105)**	$ 378
10029997-105		$ 378
10029997-084		$ 378
10029998-084	30 in. modern straight grab bar with flange (front installation) Specify colour: White **(002)**, Chrome **(084)**, Brushed Nickel **(105)**	$ 403
10029998-002		$ 403
10029998-105		$ 403
10030095-002	32 in. curved left-hand grab bar with flange (front installation) Specify colour: White **(002)**, Chrome **(084)**, Brushed Nickel **(105)**	$ 581
10030095-084		$ 581
10030095-105		$ 581
10030097-084	32 in. curved right-hand grab bar with flange (front installation) Specify colour: White **(002)**, Chrome **(084)**, Brushed Nickel **(105)**	$ 581
10030097-002		$ 581
10030097-105		$ 581
10000041-105	**Shower Drain (sold separately)** **PVC quick caulking shower drain, compression type** **Specify grid color: Chrome (084) or Brushed Nickel (105)**	$ 59
10000041-084		$ 59
10000043-084	**Shower Drain (sold separately)** **2-piece ABS shower drain with Chrome stainless steel grid**	$ 54
10004349-001	ABS shower drain with ABS grid (sold separately) Available color: White **(001)** and Bone **(004)**	$ 21
10004349-004		$ 21
10028765-105	24 in. modern straight grab bar [36] Specify color: White **(002)**, Chrome **(084)**, Brushed Nickel **(105)**	$ 315
10028765-084		$ 315
10028765-002		$ 315
10029248-105	30 in. Modern straight grab bar [36] Specify color: White **(002)**, Chrome **(084)**, Brushed Nickel **(105)**	$ 359
10029248-002		$ 359
10029248-084		$ 359
10029253-002	32 in. Left hand curved grab bar [36] Left refers to the upper section of the curved bar Specify color: White **(002)**, Chrome **(084)**, Brushed Nickel **(105)**	$ 536
10029253-084		$ 536
10029253-105		$ 536
10029254-084	32 in. Right hand curved grab bar [36] Right refers to the upper section of the curved bar Specify color: White **(002)**, Chrome **(084)**, Brushed Nickel **(105)**	$ 536
10029254-002		$ 536
10029254-105		$ 536

FOOTNOTES

No	Description
30	Please see technical drawings on https://www.maax.com for grab bar and/or seat positioning.
31	Right (R)/Left (L) refers to the upper section of the ergonomic grab bar.
32	Right/Left refers to the pivot direction of the bar (from closed to open position).
33	Please see technical drawings on https://www.maax.com for reinforcement positioning and size.
36	Rear access grab bar installation. Must be secured onto unit prior to alcove unit insert.
36	
36	

RECOMMENDED DOORS - VISIT OUR WEBSITE FOR A COMPLETE LIST OF RECOMMENDED DOORS

SKU	Product Name	Pag.
138275	Manhattan 53-55 x 68 - 6mm	892
138521	Incognito 74 51-54 x 74 in. 8mm Shower Door	835
139579	Reveal Sleek 71 51 1/2-54 1/2 x 71 1/2 - 8mm	904
134564	Kameleon 51-55 x 71 - 6mm	825

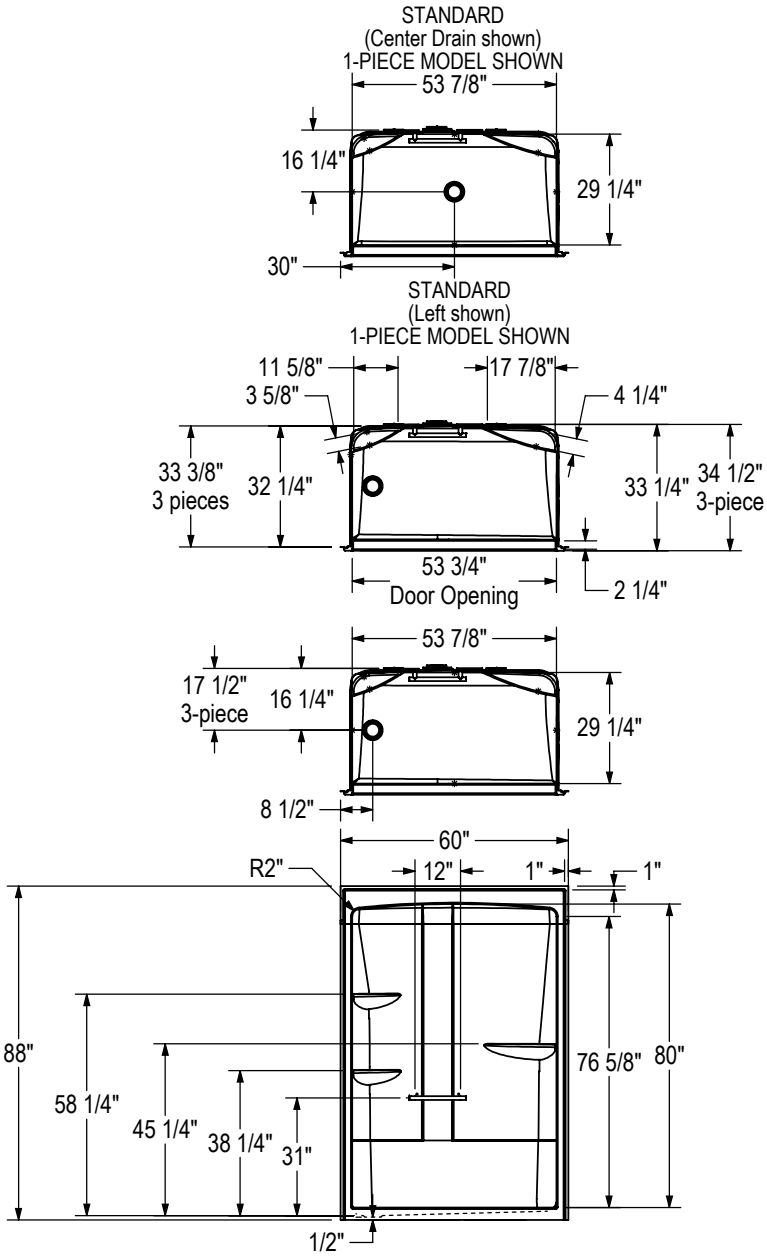

All dimensions are approximate. Structure measurements must be verified against the unit to ensure proper fit.

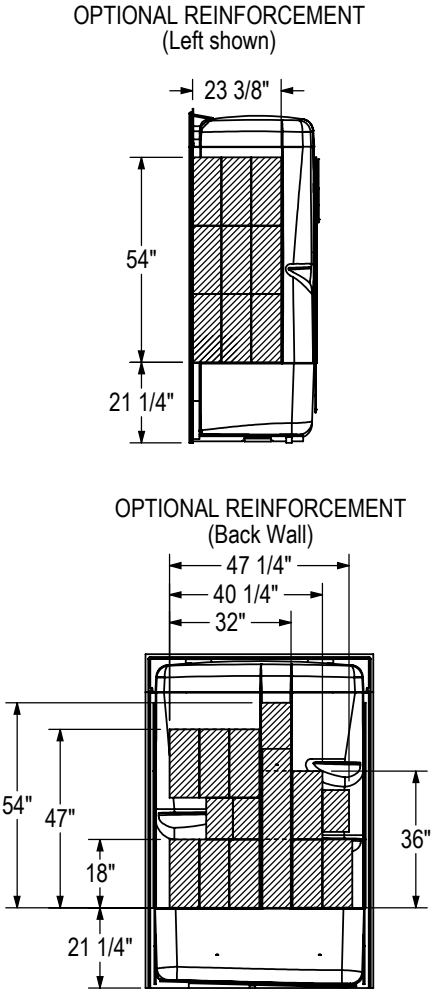

Go to Table of Contents

Biarritz 40

Material : AcrylX

Features

- One piece design for a quick installation and easy maintenance with no visible silicone joints
- 2 built-in shelves provide convenient storage space
- Made with AcrylX™ finish for enhanced durability
- High gloss finish resistant to dulling, scratching, and fading
- Center drain configuration
- Shower for an alcove installation
- Direct-to-stud installation saves time and money
- Smooth Walls for a modern and minimalist look
- Pre-assembled unit minimizing the installation steps

BIARRITZ 40 - 100959

SKU	Color	Configuration	Dimensions & Weight	Packaging	MSRP
100959-000-002-200	White	Center Drain / No Seat Seat	29 3/4” x 31 1/4” x 73 1/2” / 65 lb	41.73 ft^3	$ 1210

ACCESSORIES

SKU	Description	MSRP
10000041-105	**Shower Drain (sold separately)** **PVC quick caulking shower drain, compression type** **Specify grid color: Chrome (084) or Brushed Nickel (105)**	$ 59
10000041-084		$ 59
10000043-084	**Shower Drain (sold separately)** **2-piece ABS shower drain with Chrome stainless steel grid**	$ 54
10004349-001	ABS shower drain with ABS grid (sold separately) Available color: White **(001)** and Bone **(004)**	$ 21
10004349-004		$ 21

RECOMMENDED DOORS - VISIT OUR WEBSITE FOR A COMPLETE LIST OF RECOMMENDED DOORS

SKU	Product Name	Pag.
138260	Manhattan 23-25 x 68 - 6mm	888
136625	Pivolok 23-24 ¾ x 64 ½ in.	896

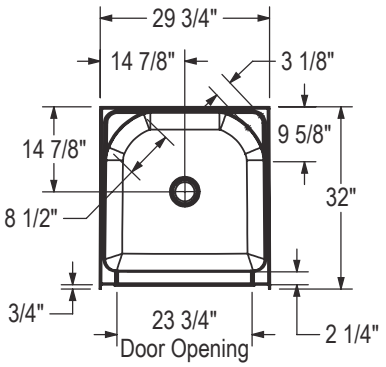

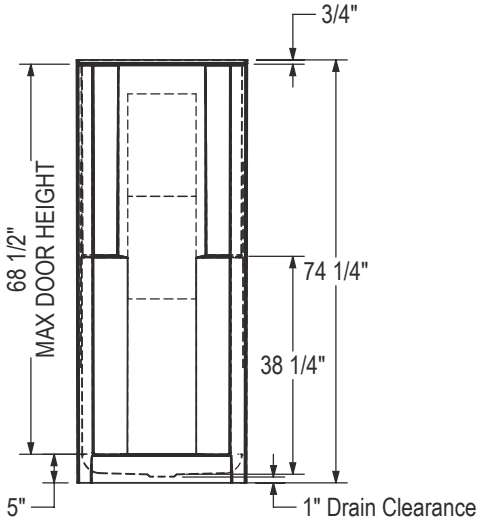

REINFORCEMENT BACKING

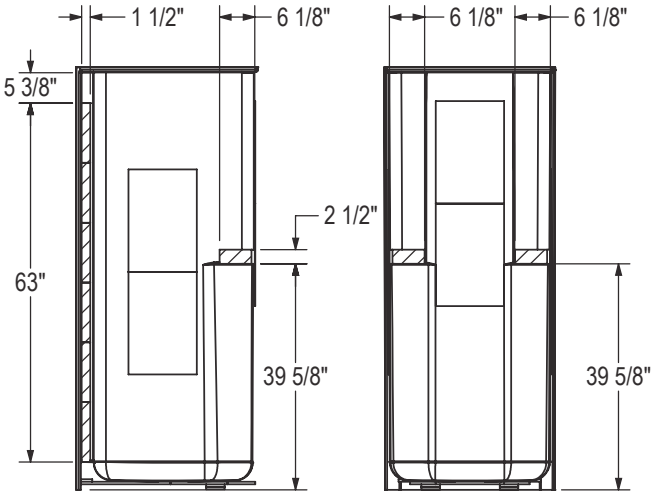

All dimensions are approximate. Structure measurements must be verified against the unit to ensure proper fit.

Biarritz 80

Material : AcrylX

Features

- One piece design for a quick installation and easy maintenance with no visible silicone joints
- 2 built-in shelves provide convenient storage space
- Made with AcrylX™ finish for enhanced durability
- High gloss finish resistant to dulling, scratching, and fading
- Center drain configuration
- Shower for an alcove installation
- Direct-to-stud installation saves time and money
- Smooth Walls for a modern and minimalist look
- Pre-assembled unit minimizing the installation steps

BIARRITZ 80 - 100971

SKU	Color	Configuration	Dimensions & Weight	Packaging	MSRP
100971-000-002-000	White	Center Drain / No Seat Seat	31 5/8” x 32 1/4” x 73 1/8” / 70 lb	48.27 ft^3	$ 1309

ACCESSORIES

SKU	Description	MSRP
10000041-105	**Shower Drain (sold separately)** **PVC quick caulking shower drain, compression type** **Specify grid color: Chrome (084) or Brushed Nickel (105)**	$ 59
10000041-084		$ 59
10000043-084	**Shower Drain (sold separately)** **2-piece ABS shower drain with Chrome stainless steel grid**	$ 54
10004349-001	ABS shower drain with ABS grid (sold separately) Available color: White **(001)** and Bone **(004)**	$ 21
10004349-004		$ 21

RECOMMENDED DOORS - VISIT OUR WEBSITE FOR A COMPLETE LIST OF RECOMMENDED DOORS

SKU	Product Name	Pag.
138260	Manhattan 23-25 x 68 - 6mm	888
136625	Pivolok 23-24 ¾ x 64 ½ in.	896

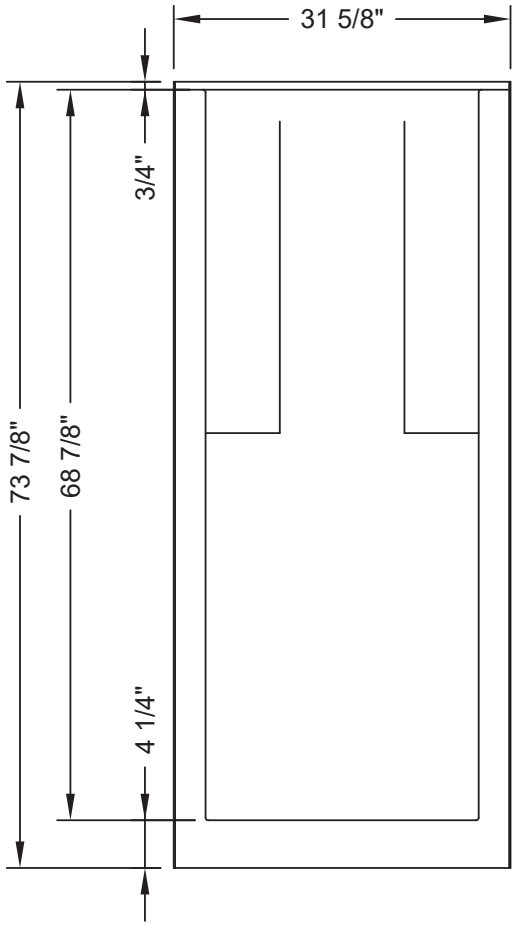

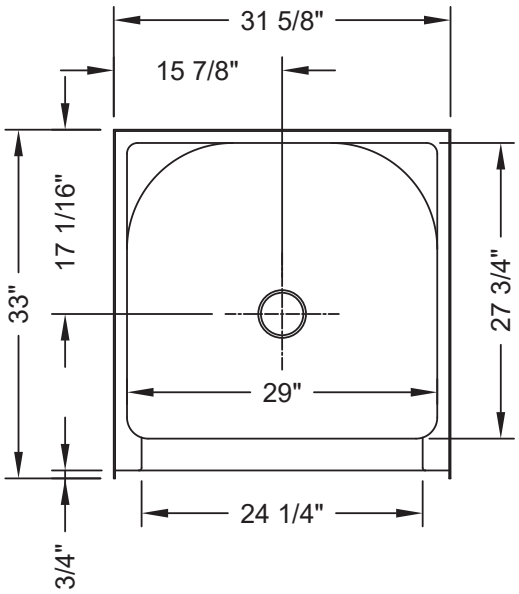

All dimensions are approximate. Structure measurements must be verified against the unit to ensure proper fit.

Go to Table of Contents

Biarritz 85

Material : AcrylX

Features

- One piece design for a quick installation and easy maintenance with no visible silicone joints
- 2 built-in shelves provide convenient storage space
- Made with AcrylX™ finish for enhanced durability
- High gloss finish resistant to dulling, scratching, and fading
- Center drain configuration
- Shower for an alcove installation
- Direct-to-stud installation saves time and money
- Smooth Walls for a modern and minimalist look
- Pre-assembled unit minimizing the installation steps

BIARRITZ 85 - 100973

SKU	Color	Configuration	Dimensions & Weight	Packaging	MSRP
100973-000-002-200	White	Center Drain / No Seat Seat	35 5/8” x 33 7/8” x 74 1/4” / 88 lb	55.58 ft^3	$ 1752

ACCESSORIES

SKU	Description	MSRP
10000041-105	**Shower Drain (sold separately)** **PVC quick caulking shower drain, compression type** **Specify grid color: Chrome (084) or Brushed Nickel (105)**	$ 59
10000041-084		$ 59
10000043-084	**Shower Drain (sold separately)** **2-piece ABS shower drain with Chrome stainless steel grid**	$ 54
10004349-001	ABS shower drain with ABS grid (sold separately) Available color: White **(001)** and Bone **(004)**	$ 21
10004349-004		$ 21

RECOMMENDED DOORS - VISIT OUR WEBSITE FOR A COMPLETE LIST OF RECOMMENDED DOORS

SKU	Product Name	Pag.
138262	Manhattan 27-29 x 68 - 6mm	888
136635	Pivolok 27-28 ¾ x 64 ½ in.	896

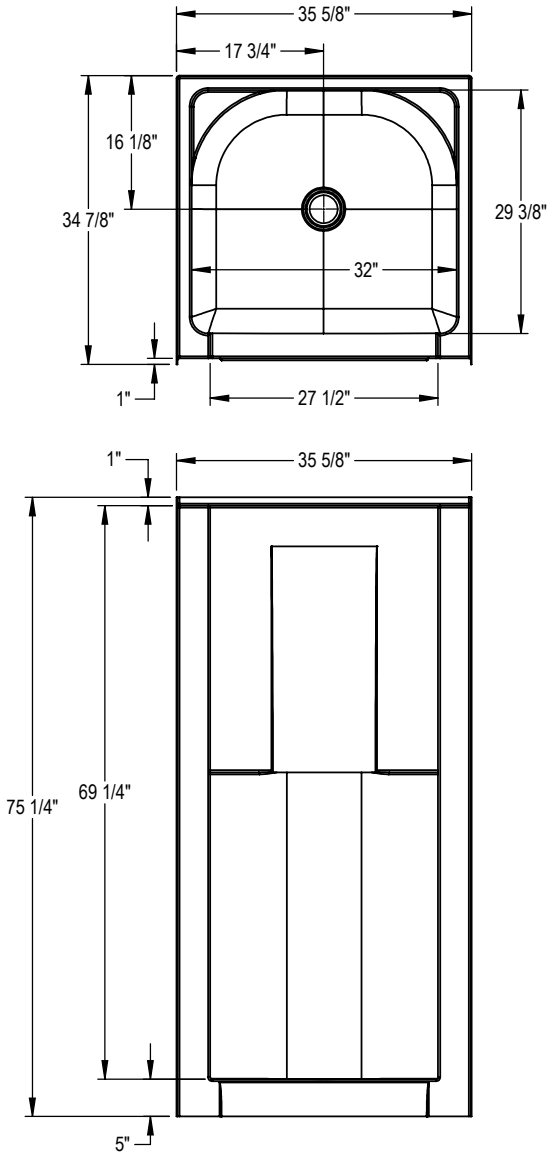

All dimensions are approximate. Structure measurements must be verified against the unit to ensure proper fit.

Icon SH 4834

Material : AcrylX

Features

- Made of AcrylX applied acrylic for improved durability
- Smooth Walls for a modern and minimalist look
- Flat walls to easily accomodate future grab bars
- Slip-resistant textured bottom for additional safety
- Built-in shelf provide generous storage space, making it easy to keep bathing essentials organized
- Two integrated and convenient footrests
- 1 Piece construction for easy installation and maintenance
- Available with and without an Above-the-Floor Rough (AFR) configuration
- Pair with the optional teak wood seat to add functionnality to the shower space

ICON SH4834 - 107426

SKU	Color	Configuration	Dimensions & Weight	Packaging	MSRP
107426-000-002-000	White	Center Drain	48” x 33 1/2” x 75 1/2” / 135 lb	749 ft^3	$ 2506

COMMON OPTIONS

SKU	Description	MSRP
OPT20204-L-084	24 in. Modern straight grab bar [30] **OPT 20204-L-XXX Vertical grab bar on left wall** Available colours: White **(002)**, Chrome **(084)** and Brushed Nickel **(105)**	$ 331
OPT20204-L-105		$ 331
OPT20204-L-002		$ 331
OPT20204-R-002	24 in. Modern straight grab bar [30] **OPT 20204-R-XXX Vertical grab bar on right wall** Available colours: White **(002)**, Chrome **(084)** and Brushed Nickel **(105)**	$ 331
OPT20204-R-084		$ 331
OPT20204-R-105		$ 331
OPT20218-L-002	23 in. Curved grab bar (back wall) [30], [31] **OPT20218-L-XXX Left-hand curved grab bar on back wall** Available colours: White **(002)**, Chrome **(084)** and Brushed Nickel **(105)**	$ 537
OPT20218-L-084		$ 537
OPT20218-L-105		$ 537
OPT20218-R-002	23 in. Curved grab bar (back wall) [30], [31] **OPT20218-R-XXX Right-hand curved grab bar on back wall** Available colours: White **(002)**, Chrome **(084)** and Brushed Nickel **(105)**	$ 537
OPT20218-R-084		$ 537
OPT20218-R-105		$ 537
OPT20203-B-002	18 in. Modern straight grab bar [30] **OPT 20203-B-XXX Horizontal grab bar on back wall** Available colours: White **(002)**, Chrome **(084)** and Brushed Nickel **(105)**	$ 283
OPT20203-B-105		$ 283
OPT20203-B-084		$ 283
OPT20203-L-105	18 in. Modern straight grab bar [30] **OPT 20203-L-XXX Vertical grab bar on left wall** Available colours: White **(002)**, Chrome **(084)** and Brushed Nickel **(105)**	$ 283
OPT20203-L-002		$ 283
OPT20203-L-084		$ 283
OPT20203-R-084	18 in. Modern straight grab bar [30] **OPT 20203-R-XXX Vertical grab bar on right wall** Available colours: White **(002)**, Chrome **(084)** and Brushed Nickel **(105)**	$ 283
OPT20203-R-002		$ 283
OPT20203-R-105		$ 283
OPT20204-B-002	24 in. Modern straight grab bar [30] **OPT 20204-B-XXX Horizontal grab bar on back wall** Available colours: White **(002)**, Chrome **(084)** and Brushed Nickel **(105)**	$ 331
OPT20204-B-084		$ 331
OPT20204-B-105		$ 331
OPT20212-B	Back Wall reinforcement for future grab installation [33]	$ 105
OPT20212-L	Left Wall reinforcement for future grab installation [33]	$ 105
OPT20212-R	Right Wall reinforcement for future grab installation [33]	$ 105
OPT10189	Three-wall reinforcement for future grab bar installation [33]	$ 305

FOOTNOTES

No	Description
30	Please see technical drawings on https://www.maax.com for grab bar and/or seat positioning.
31	Right (R)/Left (L) refers to the upper section of the ergonomic grab bar.
33	Please see technical drawings on https://www.maax.com for reinforcement positioning and size.

RECOMMENDED DOORS - VISIT OUR WEBSITE FOR A COMPLETE LIST OF RECOMMENDED DOORS

SKU	Product Name	Pag.
138270	Manhattan 43-45 x 68	892
139352	Incognito 70 44-47 x 70 1/2 in. 8mm Shower Door	833
139349	Incognito 70 44-47 x 70 1/2 in. 6mm Shower Door	831
136690	Revelation Round 44-47 x 70 1/2-73	846
135693	Revelation Square 44-47 x 70 ½-73 - 8mm	852
136693	Revelation Round 44-47 x 70 ½-73 - 8mm	848
135690	Revelation Square 44-47 x 70 ½-73 - 6mm	850
139577	Reveal Sleek 71 41 1/2-44 1/2 x 71 1/2 - 8mm	904
138761	Inverto 43-47 x 70 ½-74 - 8mm	843
134663	Kameleon SC 43-47 x 71 - 6mm	818
134571	Kameleon 43-47 x 71 - 8mm	827
134674	Kameleon SC 43-47 x 71 - 8mm	820
134563	Kameleon 43-47 x 71 - 6mm	822
136677	Reveal 71 41 ½-44 ½ x 71 ½ - 8mm	901
136671	Reveal 71 44-47 x 71 ½ - 8mm	901
105413	Polar 42-47 ½ x 68 in.	845

BASE MODEL
Center Drain Shown

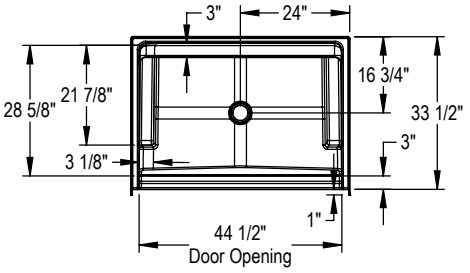

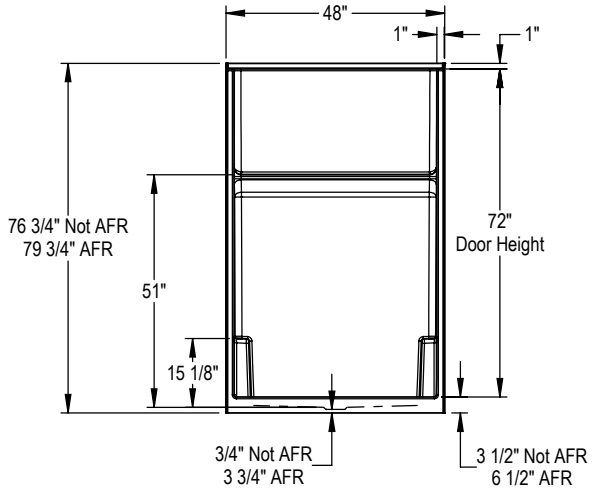

BUILDER BACKING OPTION

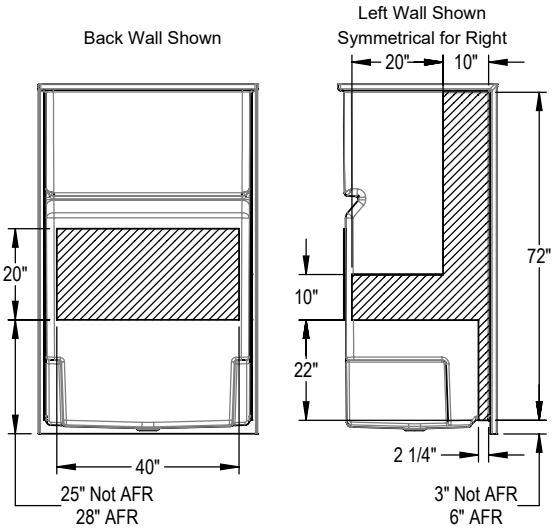

FULL BACKING OPTION

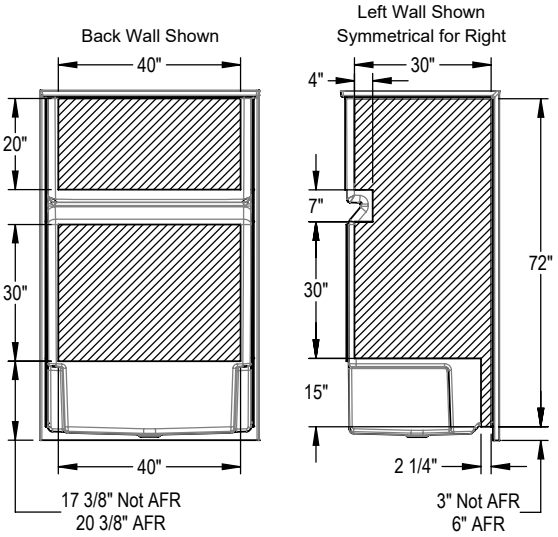

All dimensions are approximate. Structure measurements must be verified against the unit to ensure proper fit.

Icon SH 4834X AFR

Material : AcrylX

Features

- Made of AcrylX applied acrylic for improved durability
- Smooth Walls for a modern and minimalist look
- Flat walls to easily accomodate future grab bars
- Slip-resistant textured bottom for additional safety
- Built-in shelf provide generous storage space, making it easy to keep bathing essentials organized
- Two integrated and convenient footrests
- 1 Piece construction for easy installation and maintenance
- Available with and without an Above-the-Floor Rough (AFR) configuration
- Pair with the optional teak wood seat to add functionnality to the shower space

ICON SH4834X AFR - 107427

SKU	Color	Configuration	Dimensions & Weight	Packaging	MSRP
107427-000-002-500	White	Center Drain	48” x 33 1/2” x 78 1/2” / 138 lb	76.99 ft^3	$ 2506

COMMON OPTIONS

SKU	Description	MSRP
OPT20204-L-084	24 in. Modern straight grab bar [30] **OPT 20204-L-XXX Vertical grab bar on left wall** Available colours: White **(002)**, Chrome **(084)** and Brushed Nickel **(105)**	$ 331
OPT20204-L-105		$ 331
OPT20204-L-002		$ 331
OPT20204-R-002	24 in. Modern straight grab bar [30] **OPT 20204-R-XXX Vertical grab bar on right wall** Available colours: White **(002)**, Chrome **(084)** and Brushed Nickel **(105)**	$ 331
OPT20204-R-084		$ 331
OPT20204-R-105		$ 331
OPT20218-L-002	23 in. Curved grab bar (back wall) [30], [31] **OPT20218-L-XXX Left-hand curved grab bar on back wall** Available colours: White **(002)**, Chrome **(084)** and Brushed Nickel **(105)**	$ 537
OPT20218-L-084		$ 537
OPT20218-L-105		$ 537
OPT20218-R-002	23 in. Curved grab bar (back wall) [30], [31] **OPT20218-R-XXX Right-hand curved grab bar on back wall** Available colours: White **(002)**, Chrome **(084)** and Brushed Nickel **(105)**	$ 537
OPT20218-R-084		$ 537
OPT20218-R-105		$ 537
OPT20203-B-002	18 in. Modern straight grab bar [30] **OPT 20203-B-XXX Horizontal grab bar on back wall** Available colours: White **(002)**, Chrome **(084)** and Brushed Nickel **(105)**	$ 283
OPT20203-B-105		$ 283
OPT20203-B-084		$ 283
OPT20203-L-105	18 in. Modern straight grab bar [30] **OPT 20203-L-XXX Vertical grab bar on left wall** Available colours: White **(002)**, Chrome **(084)** and Brushed Nickel **(105)**	$ 283
OPT20203-L-002		$ 283
OPT20203-L-084		$ 283
OPT20203-R-084	18 in. Modern straight grab bar [30] **OPT 20203-R-XXX Vertical grab bar on right wall** Available colours: White **(002)**, Chrome **(084)** and Brushed Nickel **(105)**	$ 283
OPT20203-R-002		$ 283
OPT20203-R-105		$ 283
OPT20204-B-002	24 in. Modern straight grab bar [30] **OPT 20204-B-XXX Horizontal grab bar on back wall** Available colours: White **(002)**, Chrome **(084)** and Brushed Nickel **(105)**	$ 331
OPT20204-B-084		$ 331
OPT20204-B-105		$ 331
OPT20212-B	Back Wall reinforcement for future grab installation [33]	$ 105
OPT20212-L	Left Wall reinforcement for future grab installation [33]	$ 105
OPT20212-R	Right Wall reinforcement for future grab installation [33]	$ 105
OPT10189	Three-wall reinforcement for future grab bar installation [33]	$ 305

FOOTNOTES

No	Description
30	Please see technical drawings on https://www.maax.com for grab bar and/or seat positioning.
31	Right (R)/Left (L) refers to the upper section of the ergonomic grab bar.
33	Please see technical drawings on https://www.maax.com for reinforcement positioning and size.

RECOMMENDED DOORS - VISIT OUR WEBSITE FOR A COMPLETE LIST OF RECOMMENDED DOORS

SKU	Product Name	Pag.
138270	Manhattan 43-45 x 68	892
139352	Incognito 70 44-47 x 70 1/2 in. 8mm Shower Door	833
139349	Incognito 70 44-47 x 70 1/2 in. 6mm Shower Door	831
136690	Revelation Round 44-47 x 70 1/2-73	846
135693	Revelation Square 44-47 x 70 ½-73 - 8mm	852
136693	Revelation Round 44-47 x 70 ½-73 - 8mm	848
135690	Revelation Square 44-47 x 70 ½-73 - 6mm	850
139577	Reveal Sleek 71 41 1/2-44 1/2 x 71 1/2 - 8mm	904
138761	Inverto 43-47 x 70 ½-74 - 8mm	843
134663	Kameleon SC 43-47 x 71 - 6mm	818
134571	Kameleon 43-47 x 71 - 8mm	827
134674	Kameleon SC 43-47 x 71 - 8mm	820
134563	Kameleon 43-47 x 71 - 6mm	822
136677	Reveal 71 41 ½-44 ½ x 71 ½ - 8mm	901
136671	Reveal 71 44-47 x 71 ½ - 8mm	901
105413	Polar 42-47 ½ x 68 in.	845

Go to Table of Contents

BASE MODEL
Center Drain Shown

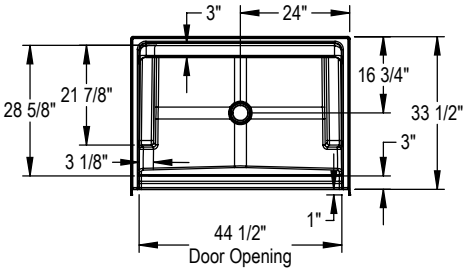

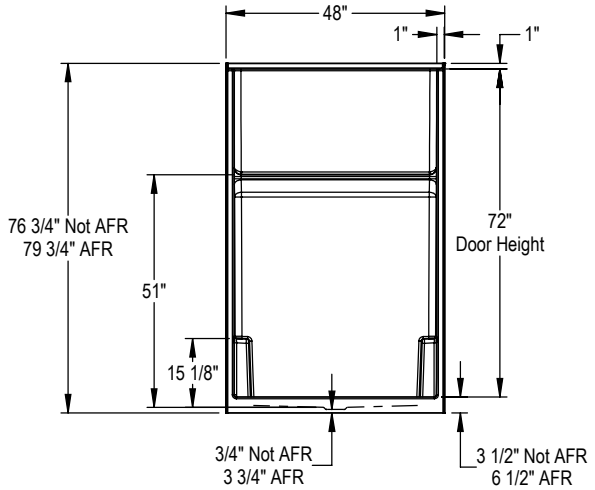

BUILDER BACKING OPTION

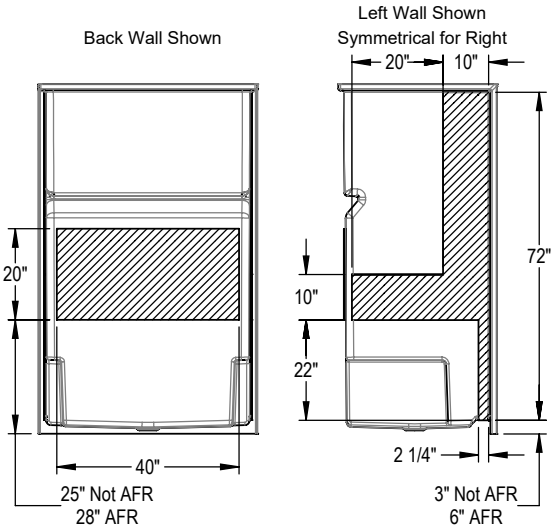

FULL BACKING OPTION

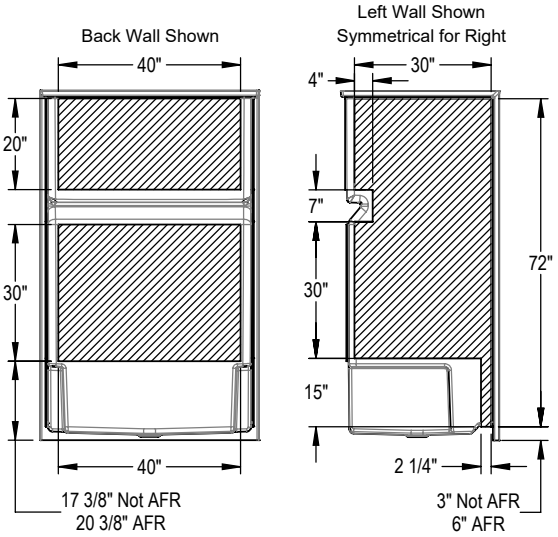

All dimensions are approximate. Structure measurements must be verified against the unit to ensure proper fit.

Icon SH 6036

Material : AcrylX

Features

- Made of AcrylX™ applied acrylic for improved durability
- Slip-resistant textured bottom for additional safety
- Available with and without an Above-the-Floor Rough (AFR) configuration
- Built-in shelf provides generous storage space, making it easy to keep bathing essentials organized
- Pair with the optional teak wood seat to add functionnality to the shower space
- Smooth walls for a modern and minimalist look
- Flat walls to easily accomodate future grab bars
- Two integrated and convenient footrests
- 1 Piece construction for easy installation and maintenance

ICON SH6036 - 107167

SKU	Color	Configuration	Dimensions & Weight	Packaging	MSRP
107167-000-002-000	White	Center Drain / No Seat Seat	60” x 36” x 75 1/2” / 135 lb	99.27 ft^3	$ 2925

COMMON OPTIONS

SKU	Description	MSRP
OPT20212-B	Back Wall reinforcement for future grab installation [33]	$ 105
OPT20212-L	Left Wall reinforcement for future grab installation [33]	$ 105
OPT20212-R	Right Wall reinforcement for future grab installation [33]	$ 105
OPT10189	Three-wall reinforcement for future grab bar installation [33]	$ 305
OPT20203-B-002	18 in. Modern straight grab bar [30] **OPT 20203-B-XXX Horizontal grab bar on back wall** Available colours: White **(002)**, Chrome **(084)** and Brushed Nickel **(105)**	$ 283
OPT20203-B-105		$ 283
OPT20203-B-084		$ 283
OPT20203-L-105	18 in. Modern straight grab bar [30] **OPT 20203-L-XXX Vertical grab bar on left wall** Available colours: White **(002)**, Chrome **(084)** and Brushed Nickel **(105)**	$ 283
OPT20203-L-002		$ 283
OPT20203-L-084		$ 283
OPT20203-R-084	18 in. Modern straight grab bar [30] **OPT 20203-R-XXX Vertical grab bar on right wall** Available colours: White **(002)**, Chrome **(084)** and Brushed Nickel **(105)**	$ 283
OPT20203-R-002		$ 283
OPT20203-R-105		$ 283
OPT20204-B-002	24 in. Modern straight grab bar [30] **OPT 20204-B-XXX Horizontal grab bar on back wall** Available colours: White **(002)**, Chrome **(084)** and Brushed Nickel **(105)**	$ 331
OPT20204-B-084		$ 331
OPT20204-B-105		$ 331
OPT20204-L-084	24 in. Modern straight grab bar [30] **OPT 20204-L-XXX Vertical grab bar on left wall** Available colours: White **(002)**, Chrome **(084)** and Brushed Nickel **(105)**	$ 331
OPT20204-L-105		$ 331
OPT20204-L-002		$ 331
OPT20204-R-002	24 in. Modern straight grab bar [30] **OPT 20204-R-XXX Vertical grab bar on right wall** Available colours: White **(002)**, Chrome **(084)** and Brushed Nickel **(105)**	$ 331
OPT20204-R-084		$ 331
OPT20204-R-105		$ 331
OPT20217-L-105	32 in. Curved grab bar (back wall) [3031] **OPT 20217-L-XXX Left-hand curved grab bar on back wall** Available colours: White **(002)**, Chrome **(084)** and Brushed Nickel **(105)**	$ 584
OPT20217-L-002		$ 584
OPT20217-L-084		$ 584
OPT20217-R-002	32 in. Curved grab bar (back wall) [3031] **OPT 20217-R-XXX Right-hand curved grab bar on back wall** Available colours: White **(002)**, Chrome **(084)** and Brushed Nickel **(105)**	$ 584

COMMON OPTIONS

SKU	Description	MSRP
OPT20217-R-105	32 in. Curved grab bar (back wall) [3031]	$ 584
OPT20217-R-084	**OPT 20217-R-XXX Right-hand curved grab bar on back wall** Available colours: White **(002)**, Chrome **(084)** and Brushed Nickel **(105)**	$ 584

FOOTNOTES

No	Description
30	Please see technical drawings on https://www.maax.com for grab bar and/or seat positioning.
31	Right (R)/Left (L) refers to the upper section of the ergonomic grab bar.
33	Please see technical drawings on https://www.maax.com for reinforcement positioning and size.

RECOMMENDED DOORS - VISIT OUR WEBSITE FOR A COMPLETE LIST OF RECOMMENDED DOORS

SKU	Product Name	Pag.
138276	Manhattan 55-57 x 68 - 6mm	892
139353	Incognito 70 56-59 x 70 1/2 in. 8mm Shower door	833
139350	Incognito 70 56-59 x 70 1/2 in. 6mm Shower door	831
135694	Revelation Square 56-59 x 70 ½-73 - 8mm	852
136691	Revelation Round 56-59 x 70 1/2-73	846
135691	Revelation Square 56-59 x 70 ½-73 - 6mm	850
136694	Revelation Round 56-59 x 70 ½-73 - 8mm	848
139580	Reveal Sleek 71 56-59 x 71 1/2 - 8mm	905
136272	Duel 56-58 ½ x 70 ½ x 74 - 8 mm	829
134675	Kameleon SC 55-59 x 71 - 8mm	820
134572	Kameleon 55-59 x 71 - 8mm	827
134665	Kameleon SC 55-59 x 71 - 6mm	814
134565	Kameleon 55-59 x 71 - 6mm	822
136672	Reveal 71 56-59 x 71 ½ - 8mm	901
105412	Polar 54-59 ½ x 68 in.	845

BASE MODEL
Center Drain Shown

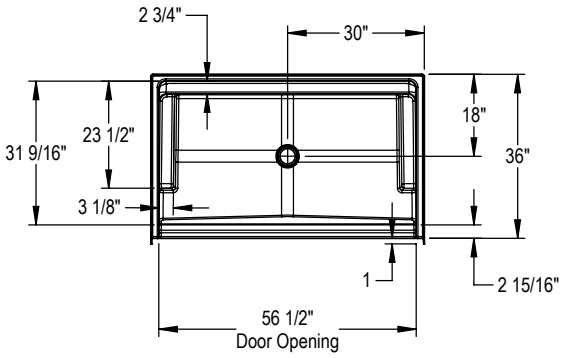

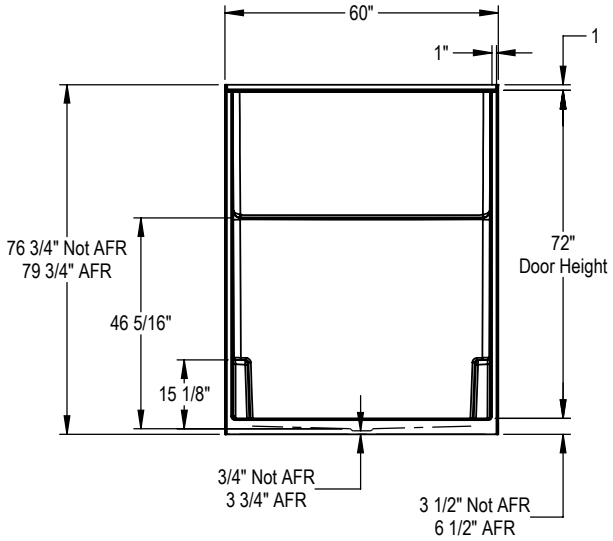

All dimensions are approximate. Structure measurements must be verified against the unit to ensure proper fit.

BUILDER BACKING OPTION

Back Wall Shown

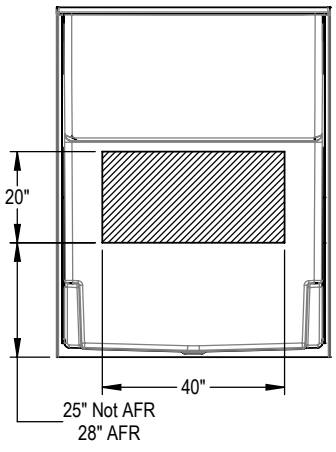

Left Wall Shown
Symmetrical for Right

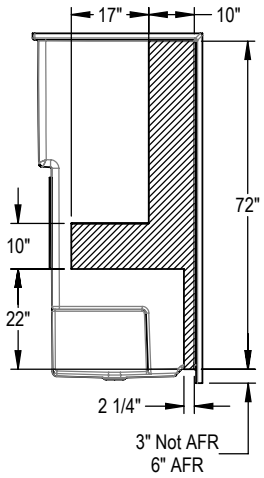

FULL BACKING OPTION

Back Wall Shown

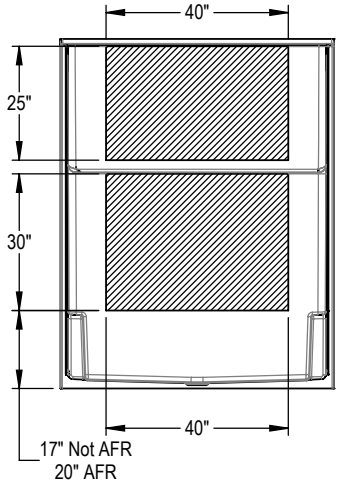

Left Wall Shown
Symmetrical for Right

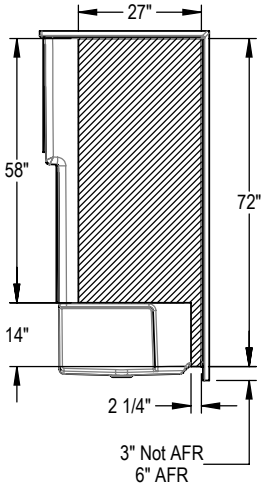

Icon SH 6036X AFR

Material : AcrylX

Features

- Made of AcrylX™ applied acrylic for improved durability
- Slip-resistant textured bottom for additional safety
- Available with and without an Above-the-Floor Rough (AFR) configuration
- Built-in shelf provides generous storage space, making it easy to keep bathing essentials organized
- Pair with the optional teak wood seat to add functionnality to the shower space
- Smooth walls for a modern and minimalist look
- Flat walls to easily accomodate future grab bars
- Two integrated and convenient footrests
- 1 Piece construction for easy installation and maintenance

ICON SH6036X AFR - 107161

SKU	Color	Configuration	Dimensions & Weight	Packaging	MSRP
107161-000-002-500	White	Center Drain / No Seat Seat	60” x 36” x 78 1/2” / 138 lb	103.15 ft^3	$ 2925

COMMON OPTIONS

SKU	Description	MSRP
OPT20212-B	Back Wall reinforcement for future grab installation [33]	$ 105
OPT20212-L	Left Wall reinforcement for future grab installation [33]	$ 105
OPT20212-R	Right Wall reinforcement for future grab installation [33]	$ 105
OPT10189	Three-wall reinforcement for future grab bar installation [33]	$ 305
OPT20203-B-002	18 in. Modern straight grab bar [30] **OPT 20203-B-XXX Horizontal grab bar on back wall** Available colours: White **(002)**, Chrome **(084)** and Brushed Nickel **(105)**	$ 283
OPT20203-B-105		$ 283
OPT20203-B-084		$ 283
OPT20203-L-105	18 in. Modern straight grab bar [30] **OPT 20203-L-XXX Vertical grab bar on left wall** Available colours: White **(002)**, Chrome **(084)** and Brushed Nickel **(105)**	$ 283
OPT20203-L-002		$ 283
OPT20203-L-084		$ 283
OPT20203-R-084	18 in. Modern straight grab bar [30] **OPT 20203-R-XXX Vertical grab bar on right wall** Available colours: White **(002)**, Chrome **(084)** and Brushed Nickel **(105)**	$ 283
OPT20203-R-002		$ 283
OPT20203-R-105		$ 283
OPT20204-B-002	24 in. Modern straight grab bar [30] **OPT 20204-B-XXX Horizontal grab bar on back wall** Available colours: White **(002)**, Chrome **(084)** and Brushed Nickel **(105)**	$ 331
OPT20204-B-084		$ 331
OPT20204-B-105		$ 331
OPT20204-L-084	24 in. Modern straight grab bar [30] **OPT 20204-L-XXX Vertical grab bar on left wall** Available colours: White **(002)**, Chrome **(084)** and Brushed Nickel **(105)**	$ 331
OPT20204-L-105		$ 331
OPT20204-L-002		$ 331
OPT20204-R-002	24 in. Modern straight grab bar [30] **OPT 20204-R-XXX Vertical grab bar on right wall** Available colours: White **(002)**, Chrome **(084)** and Brushed Nickel **(105)**	$ 331
OPT20204-R-084		$ 331
OPT20204-R-105		$ 331
OPT20217-L-105	32 in. Curved grab bar (back wall) [3031] **OPT 20217-L-XXX Left-hand curved grab bar on back wall** Available colours: White **(002)**, Chrome **(084)** and Brushed Nickel **(105)**	$ 584
OPT20217-L-002		$ 584
OPT20217-L-084		$ 584
OPT20217-R-002	32 in. Curved grab bar (back wall) [3031] **OPT 20217-R-XXX Right-hand curved grab bar on back wall** Available colours: White **(002)**, Chrome **(084)** and Brushed Nickel **(105)**	$ 584

COMMON OPTIONS

SKU	Description	MSRP
OPT20217-R-105	32 in. Curved grab bar (back wall) [3031]	$ 584
OPT20217-R-084	**OPT 20217-R-XXX Right-hand curved grab bar on back wall** Available colours: White **(002)**, Chrome **(084)** and Brushed Nickel **(105)**	$ 584

FOOTNOTES

No	Description
30	Please see technical drawings on https://www.maax.com for grab bar and/or seat positioning.
31	Right (R)/Left (L) refers to the upper section of the ergonomic grab bar.
33	Please see technical drawings on https://www.maax.com for reinforcement positioning and size.

RECOMMENDED DOORS - VISIT OUR WEBSITE FOR A COMPLETE LIST OF RECOMMENDED DOORS

SKU	Product Name	Pag.
138276	Manhattan 55-57 x 68 - 6mm	892
139353	Incognito 70 56-59 x 70 1/2 in. 8mm Shower door	833
139350	Incognito 70 56-59 x 70 1/2 in. 6mm Shower door	831
135694	Revelation Square 56-59 x 70 ½-73 - 8mm	852
136691	Revelation Round 56-59 x 70 1/2-73	846
135691	Revelation Square 56-59 x 70 ½-73 - 6mm	850
136694	Revelation Round 56-59 x 70 ½-73 - 8mm	848
139580	Reveal Sleek 71 56-59 x 71 1/2 - 8mm	905
136272	Duel 56-58 ½ x 70 ½ x 74 - 8 mm	829
134675	Kameleon SC 55-59 x 71 - 8mm	820
134572	Kameleon 55-59 x 71 - 8mm	827
134665	Kameleon SC 55-59 x 71 - 6mm	814
134565	Kameleon 55-59 x 71 - 6mm	822
136672	Reveal 71 56-59 x 71 ½ - 8mm	901
105412	Polar 54-59 ½ x 68 in.	845

BASE MODEL
Center Drain Shown

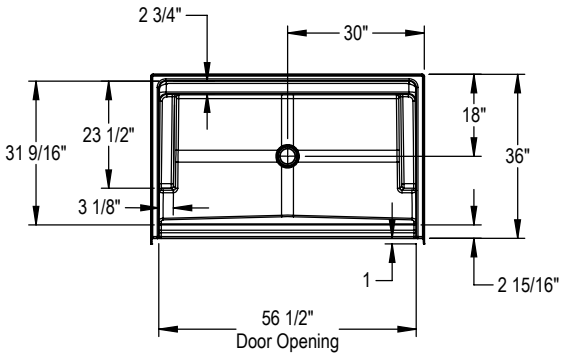

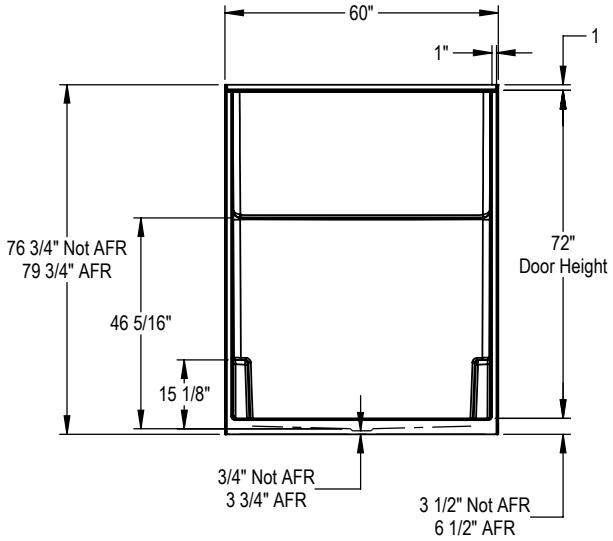

All dimensions are approximate. Structure measurements must be verified against the unit to ensure proper fit.

BUILDER BACKING OPTION

Back Wall Shown

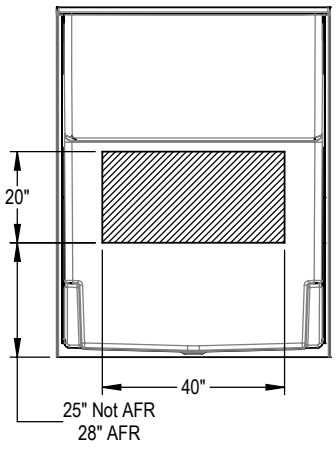

Left Wall Shown
Symmetrical for Right

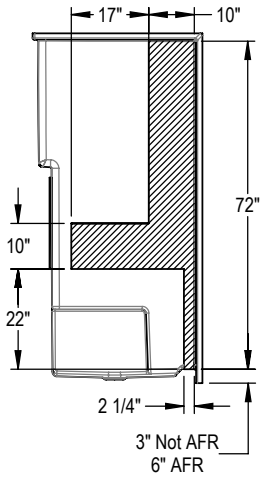

FULL BACKING OPTION

Back Wall Shown

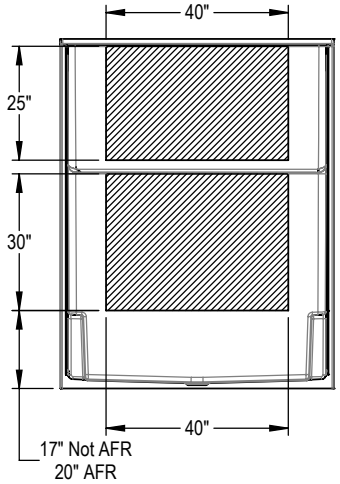

Left Wall Shown
Symmetrical for Right

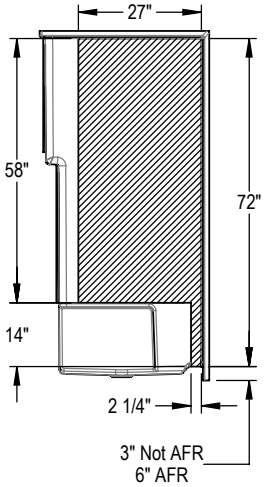

Go to Table of Contents

Icon SH3636

Material : AcrylX

Features

- Made of AcrylX™ applied acrylic for improved durability
- Slip-resistant textured bottom for additional safety
- Available with and without an Above-the-Floor Rough (AFR) configuration
- Built-in shelf provide generous storage space, making it easy to keep bathing essentials organized
- Pair with the optional teak wood seat to add functionnality to the shower space
- Smooth Walls for a modern and minimalist look
- Flat walls to easily accomodate future grab bars
- Two integrated and convenient footrests
- 1 Piece construction for easy installation and maintenance

ICON SH3636 - 107159

SKU	Color	Configuration	Dimensions & Weight	Packaging	MSRP
107159-000-002-000	White	Center Drain / No Seat Seat	36” x 36” x 75 1/2” / 100 lb	59.57 ft^3	$ 2305

COMMON OPTIONS

SKU	Description	MSRP
OPT20212-B	Back Wall reinforcement for future grab installation [33]	$ 105
OPT20212-L	Left Wall reinforcement for future grab installation [33]	$ 105
OPT20212-R	Right Wall reinforcement for future grab installation [33]	$ 105
OPT10189	Three-wall reinforcement for future grab bar installation [33]	$ 305
OPT20203-B-002	18 in. Modern straight grab bar [30] **OPT 20203-B-XXX Horizontal grab bar on back wall** Available colours: White **(002)**, Chrome **(084)** and Brushed Nickel **(105)**	$ 283
OPT20203-B-105		$ 283
OPT20203-B-084		$ 283
OPT20203-L-105	18 in. Modern straight grab bar [30] **OPT 20203-L-XXX Vertical grab bar on left wall** Available colours: White **(002)**, Chrome **(084)** and Brushed Nickel **(105)**	$ 283
OPT20203-L-002		$ 283
OPT20203-L-084		$ 283
OPT20203-R-084	18 in. Modern straight grab bar [30] **OPT 20203-R-XXX Vertical grab bar on right wall** Available colours: White **(002)**, Chrome **(084)** and Brushed Nickel **(105)**	$ 283
OPT20203-R-002		$ 283
OPT20203-R-105		$ 283
OPT20204-B-002	24 in. Modern straight grab bar [30] **OPT 20204-B-XXX Horizontal grab bar on back wall** Available colours: White **(002)**, Chrome **(084)** and Brushed Nickel **(105)**	$ 331
OPT20204-B-084		$ 331
OPT20204-B-105		$ 331
OPT20204-L-084	24 in. Modern straight grab bar [30] **OPT 20204-L-XXX Vertical grab bar on left wall** Available colours: White **(002)**, Chrome **(084)** and Brushed Nickel **(105)**	$ 331
OPT20204-L-105		$ 331
OPT20204-L-002		$ 331
OPT20204-R-002	24 in. Modern straight grab bar [30] **OPT 20204-R-XXX Vertical grab bar on right wall** Available colours: White **(002)**, Chrome **(084)** and Brushed Nickel **(105)**	$ 331
OPT20204-R-084		$ 331
OPT20204-R-105		$ 331

FOOTNOTES

No	Description
30	Please see technical drawings on https://www.maax.com for grab bar and/or seat positioning.
33	Please see technical drawings on https://www.maax.com for reinforcement positioning and size.

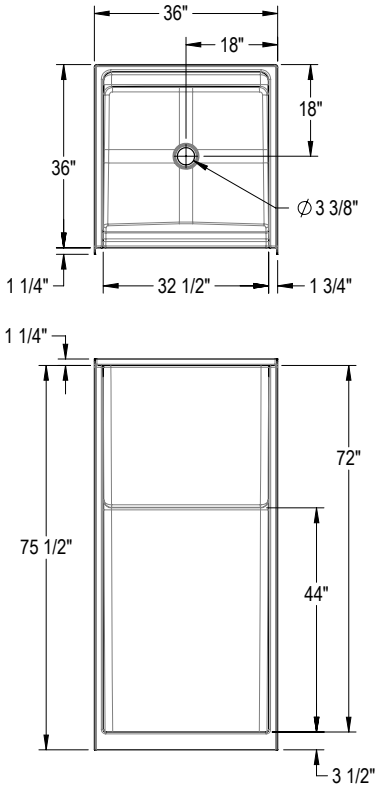

FHA Reinforcement Option

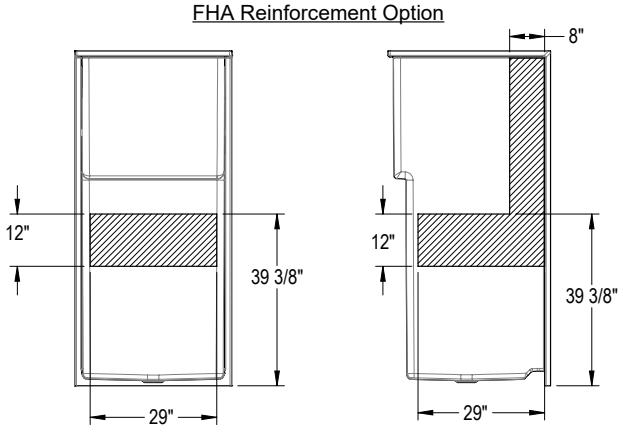

Full Wall Reinforcement Option

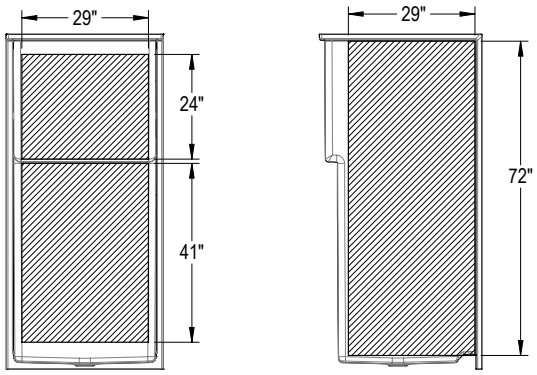

All dimensions are approximate. Structure measurements must be verified against the unit to ensure proper fit.

Icon SH3636X AFR

Material : AcrylX

Features

- Made of AcrylX™ applied acrylic for improved durability
- Slip-resistant textured bottom for additional safety
- Available with and without an Above-the-Floor Rough (AFR) configuration
- Built-in shelf provide generous storage space, making it easy to keep bathing essentials organized
- Pair with the optional teak wood seat to add functionnality to the shower space
- Smooth Walls for a modern and minimalist look
- Flat walls to easily accomodate future grab bars
- Two integrated and convenient footrests
- 1 Piece construction for easy installation and maintenance

ICON SH3636X AFR - 107636

SKU	Color	Configuration	Dimensions & Weight	Packaging	MSRP
107636-000-002-500	White	Center Drain / No Seat Seat	36” x 36” x 78 1/2” / 102 lb	61.89 ft^3	$ 2305

COMMON OPTIONS

SKU	Description	MSRP
OPT20212-B	Back Wall reinforcement for future grab installation [33]	$ 105
OPT20212-L	Left Wall reinforcement for future grab installation [33]	$ 105
OPT20212-R	Right Wall reinforcement for future grab installation [33]	$ 105
OPT10189	Three-wall reinforcement for future grab bar installation [33]	$ 305
OPT20203-B-002	18 in. Modern straight grab bar [30] **OPT 20203-B-XXX Horizontal grab bar on back wall** Available colours: White **(002)**, Chrome **(084)** and Brushed Nickel **(105)**	$ 283
OPT20203-B-105		$ 283
OPT20203-B-084		$ 283
OPT20203-L-105	18 in. Modern straight grab bar [30] **OPT 20203-L-XXX Vertical grab bar on left wall** Available colours: White **(002)**, Chrome **(084)** and Brushed Nickel **(105)**	$ 283
OPT20203-L-002		$ 283
OPT20203-L-084		$ 283
OPT20203-R-084	18 in. Modern straight grab bar [30] **OPT 20203-R-XXX Vertical grab bar on right wall** Available colours: White **(002)**, Chrome **(084)** and Brushed Nickel **(105)**	$ 283
OPT20203-R-002		$ 283
OPT20203-R-105		$ 283
OPT20204-B-002	24 in. Modern straight grab bar [30] **OPT 20204-B-XXX Horizontal grab bar on back wall** Available colours: White **(002)**, Chrome **(084)** and Brushed Nickel **(105)**	$ 331
OPT20204-B-084		$ 331
OPT20204-B-105		$ 331
OPT20204-L-084	24 in. Modern straight grab bar [30] **OPT 20204-L-XXX Vertical grab bar on left wall** Available colours: White **(002)**, Chrome **(084)** and Brushed Nickel **(105)**	$ 331
OPT20204-L-105		$ 331
OPT20204-L-002		$ 331
OPT20204-R-002	24 in. Modern straight grab bar [30] **OPT 20204-R-XXX Vertical grab bar on right wall** Available colours: White **(002)**, Chrome **(084)** and Brushed Nickel **(105)**	$ 331
OPT20204-R-084		$ 331
OPT20204-R-105		$ 331

FOOTNOTES

No	Description
30	Please see technical drawings on https://www.maax.com for grab bar and/or seat positioning.
33	Please see technical drawings on https://www.maax.com for reinforcement positioning and size.

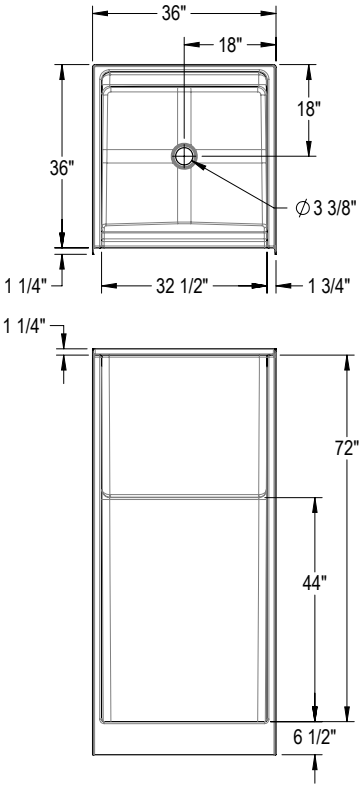

All dimensions are approximate. Structure measurements must be verified against the unit to ensure proper fit.

FHA Reinforcement Option

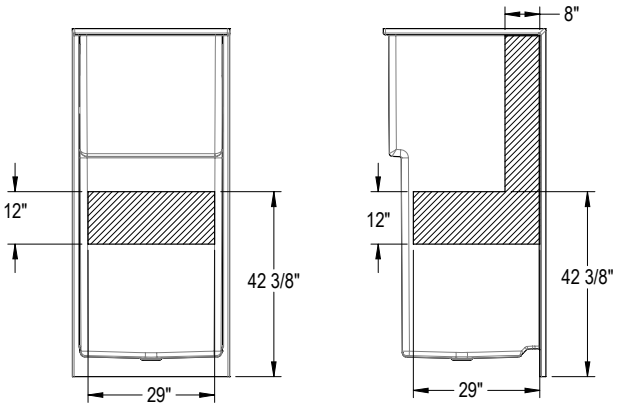

Full Wall Reinforcement Option

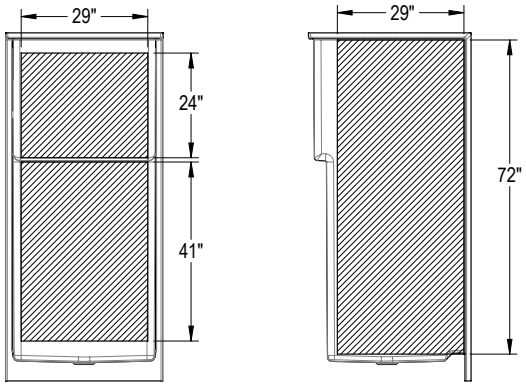

Icon SH4836

Material : AcrylX

Features

- Made of AcrylX™ applied acrylic for improved durability
- Slip-resistant textured bottom for additional safety
- Available with and without an Above-the-Floor Rough (AFR) configuration
- Built-in shelf provide generous storage space, making it easy to keep bathing essentials organized
- Pair with the optional teak wood seat to add functionnality to the shower space
- Smooth Walls for a modern and minimalist look
- Flat walls to easily accomodate future grab bars
- Two integrated and convenient footrests
- 1 Piece construction for easy installation and maintenance

ICON SH4836 - 107160

SKU	Color	Configuration	Dimensions & Weight	Packaging	MSRP
107160-000-002-000	White	Center Drain / No Seat Seat	48” x 36” x 75 1/2” / 124 lb	79.42 ft^3	$ 2555

COMMON OPTIONS

SKU	Description	MSRP
OPT20212-B	Back Wall reinforcement for future grab installation [33]	$ 105
OPT20212-L	Left Wall reinforcement for future grab installation [33]	$ 105
OPT20212-R	Right Wall reinforcement for future grab installation [33]	$ 105
OPT10189	Three-wall reinforcement for future grab bar installation [33]	$ 305
OPT20203-B-002	18 in. Modern straight grab bar [30] **OPT 20203-B-XXX Horizontal grab bar on back wall** Available colours: White **(002)**, Chrome **(084)** and Brushed Nickel **(105)**	$ 283
OPT20203-B-105		$ 283
OPT20203-B-084		$ 283
OPT20203-L-105	18 in. Modern straight grab bar [30] **OPT 20203-L-XXX Vertical grab bar on left wall** Available colours: White **(002)**, Chrome **(084)** and Brushed Nickel **(105)**	$ 283
OPT20203-L-002		$ 283
OPT20203-L-084		$ 283
OPT20203-R-084	18 in. Modern straight grab bar [30] **OPT 20203-R-XXX Vertical grab bar on right wall** Available colours: White **(002)**, Chrome **(084)** and Brushed Nickel **(105)**	$ 283
OPT20203-R-002		$ 283
OPT20203-R-105		$ 283
OPT20204-B-002	24 in. Modern straight grab bar [30] **OPT 20204-B-XXX Horizontal grab bar on back wall** Available colours: White **(002)**, Chrome **(084)** and Brushed Nickel **(105)**	$ 331
OPT20204-B-084		$ 331
OPT20204-B-105		$ 331
OPT20204-L-084	24 in. Modern straight grab bar [30] **OPT 20204-L-XXX Vertical grab bar on left wall** Available colours: White **(002)**, Chrome **(084)** and Brushed Nickel **(105)**	$ 331
OPT20204-L-105		$ 331
OPT20204-L-002		$ 331
OPT20204-R-002	24 in. Modern straight grab bar [30] **OPT 20204-R-XXX Vertical grab bar on right wall** Available colours: White **(002)**, Chrome **(084)** and Brushed Nickel **(105)**	$ 331
OPT20204-R-084		$ 331
OPT20204-R-105		$ 331
OPT20218-L-002	23 in. Curved grab bar (back wall) [30], [31] **OPT20218-L-XXX Left-hand curved grab bar on back wall** Available colours: White **(002)**, Chrome **(084)** and Brushed Nickel **(105)**	$ 537
OPT20218-L-084		$ 537
OPT20218-L-105		$ 537
OPT20218-R-002	23 in. Curved grab bar (back wall) [30], [31] **OPT20218-R-XXX Right-hand curved grab bar on back wall** Available colours: White **(002)**, Chrome **(084)** and Brushed Nickel **(105)**	$ 537

COMMON OPTIONS

SKU	Description	MSRP
OPT20218-R-084	23 in. Curved grab bar (back wall) [30], [31]	$ 537
OPT20218-R-105	**OPT20218-R-XXX Right-hand curved grab bar on back wall** Available colours: White **(002)**, Chrome **(084)** and Brushed Nickel **(105)**	$ 537

FOOTNOTES

No	Description
30	Please see technical drawings on https://www.maax.com for grab bar and/or seat positioning.
31	Right (R)/Left (L) refers to the upper section of the ergonomic grab bar.
33	Please see technical drawings on https://www.maax.com for reinforcement positioning and size.

RECOMMENDED DOORS - VISIT OUR WEBSITE FOR A COMPLETE LIST OF RECOMMENDED DOORS

SKU	Product Name	Pag.
138270	Manhattan 43-45 x 68	892
139352	Incognito 70 44-47 x 70 1/2 in. 8mm Shower Door	833
139349	Incognito 70 44-47 x 70 1/2 in. 6mm Shower Door	831
136690	Revelation Round 44-47 x 70 1/2-73	846
135693	Revelation Square 44-47 x 70 ½-73 - 8mm	852
136693	Revelation Round 44-47 x 70 ½-73 - 8mm	848
135690	Revelation Square 44-47 x 70 ½-73 - 6mm	850
139577	Reveal Sleek 71 41 1/2-44 1/2 x 71 1/2 - 8mm	904
138761	Inverto 43-47 x 70 ½-74 - 8mm	843
134663	Kameleon SC 43-47 x 71 - 6mm	818
134571	Kameleon 43-47 x 71 - 8mm	827
134674	Kameleon SC 43-47 x 71 - 8mm	820
134563	Kameleon 43-47 x 71 - 6mm	822
136677	Reveal 71 41 ½-44 ½ x 71 ½ - 8mm	901
136671	Reveal 71 44-47 x 71 ½ - 8mm	901
105413	Polar 42-47 ½ x 68 in.	845

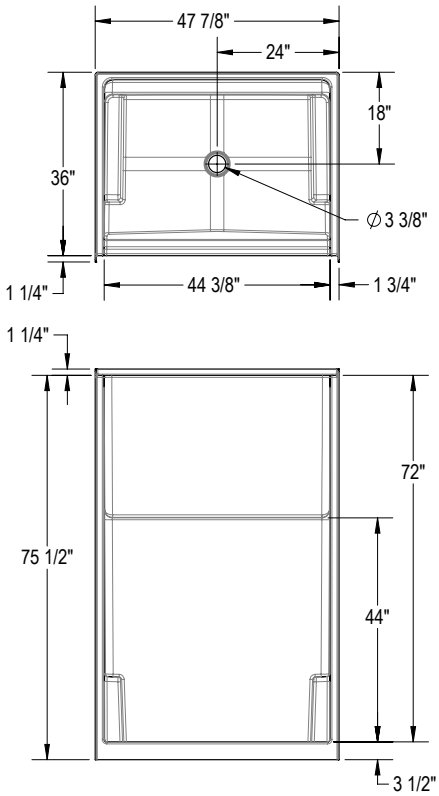

FHA Reinforcement Option

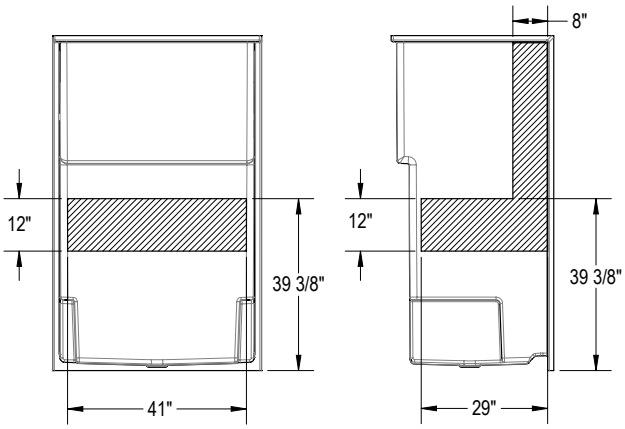

Full Wall Reinforcement Option

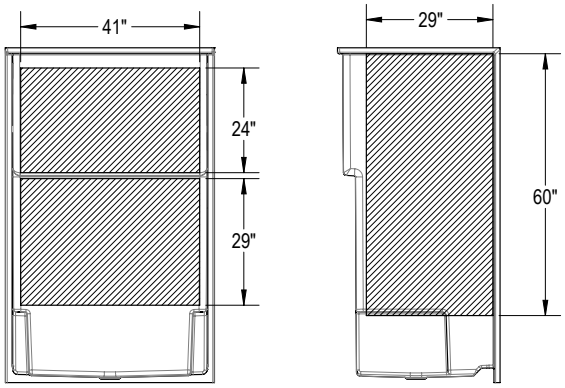

All dimensions are approximate. Structure measurements must be verified against the unit to ensure proper fit.

Icon SH4836X AFR

Material : AcrylX

Features

- Made of AcrylX™ applied acrylic for improved durability
- Slip-resistant textured bottom for additional safety
- Available with and without an Above-the-Floor Rough (AFR) configuration
- Built-in shelf provide generous storage space, making it easy to keep bathing essentials organized
- Pair with the optional teak wood seat to add functionnality to the shower space
- Smooth Walls for a modern and minimalist look
- Flat walls to easily accomodate future grab bars
- Two integrated and convenient footrests
- 1 Piece construction for easy installation and maintenance

ICON SH4836X AFR - 107166

SKU	Color	Configuration	Dimensions & Weight	Packaging	MSRP
107166-000-002-500	White	Center Drain / No Seat Seat	48” x 36” x 78 1/2” / 126 lb	82.52 ft^3	$ 2555

COMMON OPTIONS

SKU	Description	MSRP
OPT20212-B	Back Wall reinforcement for future grab installation [33]	$ 105
OPT20212-L	Left Wall reinforcement for future grab installation [33]	$ 105
OPT20212-R	Right Wall reinforcement for future grab installation [33]	$ 105
OPT10189	Three-wall reinforcement for future grab bar installation [33]	$ 305
OPT20203-B-002	18 in. Modern straight grab bar [30] **OPT 20203-B-XXX Horizontal grab bar on back wall** Available colours: White **(002)**, Chrome **(084)** and Brushed Nickel **(105)**	$ 283
OPT20203-B-105		$ 283
OPT20203-B-084		$ 283
OPT20203-L-105	18 in. Modern straight grab bar [30] **OPT 20203-L-XXX Vertical grab bar on left wall** Available colours: White **(002)**, Chrome **(084)** and Brushed Nickel **(105)**	$ 283
OPT20203-L-002		$ 283
OPT20203-L-084		$ 283
OPT20203-R-084	18 in. Modern straight grab bar [30] **OPT 20203-R-XXX Vertical grab bar on right wall** Available colours: White **(002)**, Chrome **(084)** and Brushed Nickel **(105)**	$ 283
OPT20203-R-002		$ 283
OPT20203-R-105		$ 283
OPT20204-B-002	24 in. Modern straight grab bar [30] **OPT 20204-B-XXX Horizontal grab bar on back wall** Available colours: White **(002)**, Chrome **(084)** and Brushed Nickel **(105)**	$ 331
OPT20204-B-084		$ 331
OPT20204-B-105		$ 331
OPT20204-L-084	24 in. Modern straight grab bar [30] **OPT 20204-L-XXX Vertical grab bar on left wall** Available colours: White **(002)**, Chrome **(084)** and Brushed Nickel **(105)**	$ 331
OPT20204-L-105		$ 331
OPT20204-L-002		$ 331
OPT20204-R-002	24 in. Modern straight grab bar [30] **OPT 20204-R-XXX Vertical grab bar on right wall** Available colours: White **(002)**, Chrome **(084)** and Brushed Nickel **(105)**	$ 331
OPT20204-R-084		$ 331
OPT20204-R-105		$ 331
OPT20218-L-002	23 in. Curved grab bar (back wall) [30], [31] **OPT20218-L-XXX Left-hand curved grab bar on back wall** Available colours: White **(002)**, Chrome **(084)** and Brushed Nickel **(105)**	$ 537
OPT20218-L-084		$ 537
OPT20218-L-105		$ 537
OPT20218-R-002	23 in. Curved grab bar (back wall) [30], [31] **OPT20218-R-XXX Right-hand curved grab bar on back wall** Available colours: White **(002)**, Chrome **(084)** and Brushed Nickel **(105)**	$ 537

COMMON OPTIONS

SKU	Description	MSRP
OPT20218-R-084	23 in. Curved grab bar (back wall) [30], [31]	$ 537
OPT20218-R-105	**OPT20218-R-XXX Right-hand curved grab bar on back wall** Available colours: White **(002)**, Chrome **(084)** and Brushed Nickel **(105)**	$ 537

FOOTNOTES

No	Description
30	Please see technical drawings on https://www.maax.com for grab bar and/or seat positioning.
31	Right (R)/Left (L) refers to the upper section of the ergonomic grab bar.
33	Please see technical drawings on https://www.maax.com for reinforcement positioning and size.

RECOMMENDED DOORS - VISIT OUR WEBSITE FOR A COMPLETE LIST OF RECOMMENDED DOORS

SKU	Product Name	Pag.
138270	Manhattan 43-45 x 68	892
139352	Incognito 70 44-47 x 70 1/2 in. 8mm Shower Door	833
139349	Incognito 70 44-47 x 70 1/2 in. 6mm Shower Door	831
136690	Revelation Round 44-47 x 70 1/2-73	846
135693	Revelation Square 44-47 x 70 ½-73 - 8mm	852
136693	Revelation Round 44-47 x 70 ½-73 - 8mm	848
135690	Revelation Square 44-47 x 70 ½-73 - 6mm	850
139577	Reveal Sleek 71 41 1/2-44 1/2 x 71 1/2 - 8mm	904
138761	Inverto 43-47 x 70 ½-74 - 8mm	843
134663	Kameleon SC 43-47 x 71 - 6mm	818
134571	Kameleon 43-47 x 71 - 8mm	827
134674	Kameleon SC 43-47 x 71 - 8mm	820
134563	Kameleon 43-47 x 71 - 6mm	822
136677	Reveal 71 41 ½-44 ½ x 71 ½ - 8mm	901
136671	Reveal 71 44-47 x 71 ½ - 8mm	901
105413	Polar 42-47 ½ x 68 in.	845

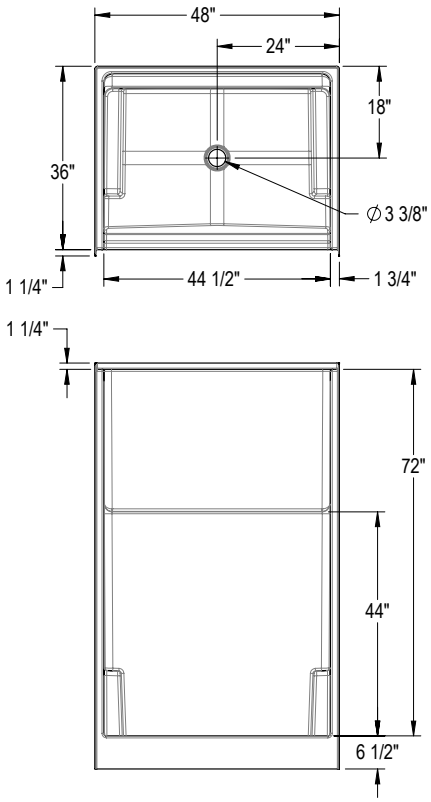

FHA Reinforcement Option

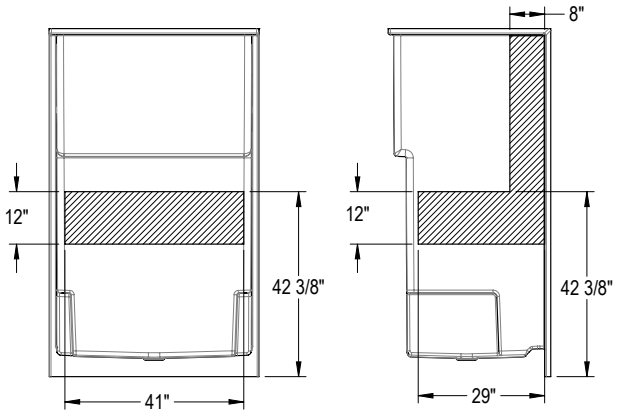

Full Wall Reinforcement Option

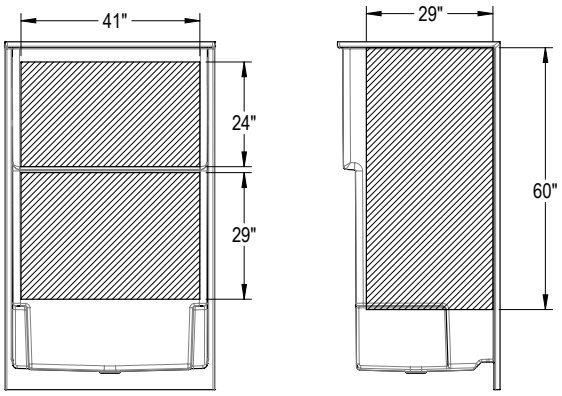

All dimensions are approximate. Structure measurements must be verified against the unit to ensure proper fit.

Go to Table of Contents

Icon SH6030

Material : AcrylX

Features

- Made of AcrylX™ applied acrylic for improved durability
- Slip-resistant textured bottom for additional safety
- Available with and without an Above-the-Floor Rough (AFR) configuration
- Built-in shelf provide generous storage space, making it easy to keep bathing essentials organized
- Pair with the optional teak wood seat to add functionnality to the shower space
- Smooth Walls for a modern and minimalist look
- Flat walls to easily accomodate future grab bars
- Two integrated and convenient footrests
- 1 Piece construction for easy installation and maintenance

ICON SH6030 - 107659

SKU	Color	Configuration	Dimensions & Weight	Packaging	MSRP
107659-000-002-001	White	Left Drain / No Seat Seat	60” x 30” x 75 1/2” / 136 lb	83.28 ft^3	$ 2756
107659-000-002-002		Right Drain / No Seat Seat			$ 2756

RECOMMENDED DOORS - VISIT OUR WEBSITE FOR A COMPLETE LIST OF RECOMMENDED DOORS

SKU	Product Name	Pag.
138276	Manhattan 55-57 x 68 - 6mm	892
139353	Incognito 70 56-59 x 70 1/2 in. 8mm Shower door	833
139350	Incognito 70 56-59 x 70 1/2 in. 6mm Shower door	831
135694	Revelation Square 56-59 x 70 ½-73 - 8mm	852
136691	Revelation Round 56-59 x 70 1/2-73	846
135691	Revelation Square 56-59 x 70 ½-73 - 6mm	850
136694	Revelation Round 56-59 x 70 ½-73 - 8mm	848
139580	Reveal Sleek 71 56-59 x 71 1/2 - 8mm	905
136272	Duel 56-58 ½ x 70 ½ x 74 - 8 mm	829
134675	Kameleon SC 55-59 x 71 - 8mm	820
134572	Kameleon 55-59 x 71 - 8mm	827
134665	Kameleon SC 55-59 x 71 - 6mm	814
134565	Kameleon 55-59 x 71 - 6mm	822
136672	Reveal 71 56-59 x 71 ½ - 8mm	901
105412	Polar 54-59 ½ x 68 in.	845

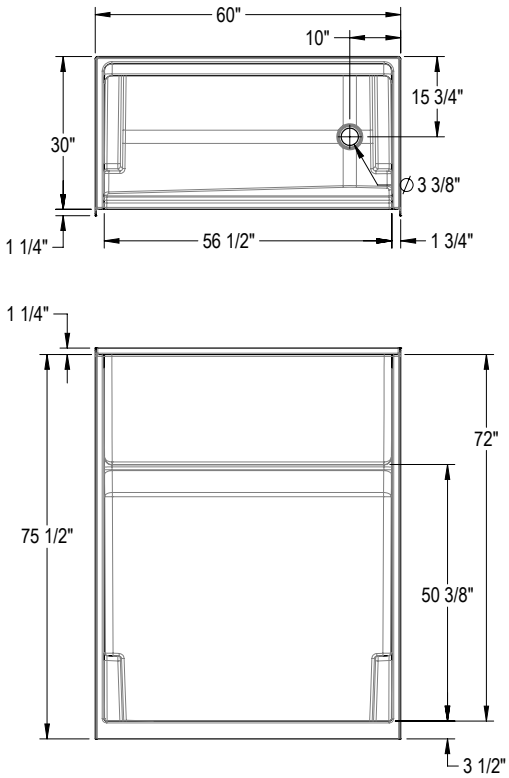

FHA Reinforcement Option

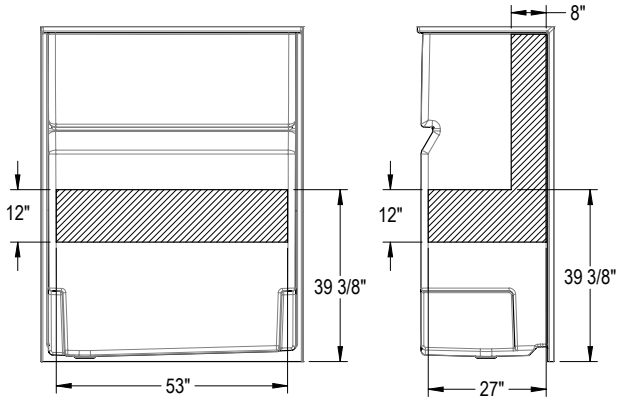

Full Wall Reinforcement Option

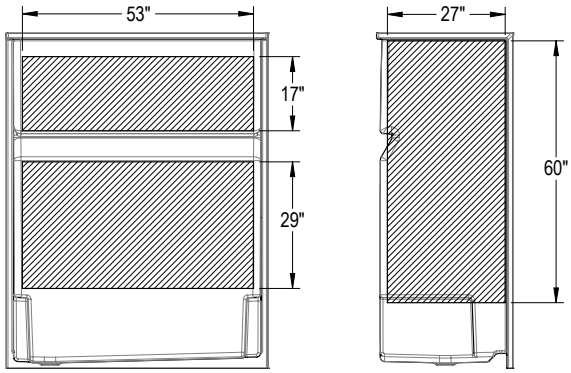

All dimensions are approximate. Structure measurements must be verified against the unit to ensure proper fit.

Go to Table of Contents

Icon SH6030X AFR

Material : AcrylX

Features

- Made of AcrylX™ applied acrylic for improved durability
- Slip-resistant textured bottom for additional safety
- Available with and without an Above-the-Floor Rough (AFR) configuration
- Built-in shelf provide generous storage space, making it easy to keep bathing essentials organized
- Pair with the optional teak wood seat to add functionnality to the shower space
- Smooth Walls for a modern and minimalist look
- Flat walls to easily accomodate future grab bars
- Two integrated and convenient footrests
- 1 Piece construction for easy installation and maintenance

ICON SH6030X AFR - 107662

SKU	Color	Configuration	Dimensions & Weight	Packaging	MSRP
107662-000-002-501	White	Left Drain / No Seat Seat	60” x 30” x 78 1/2” / 138 lb	86.54 ft^3	$ 2756
107662-000-002-502		Right Drain / No Seat Seat			$ 2756

RECOMMENDED DOORS - VISIT OUR WEBSITE FOR A COMPLETE LIST OF RECOMMENDED DOORS

SKU	Product Name	Pag.
138276	Manhattan 55-57 x 68 - 6mm	892
139353	Incognito 70 56-59 x 70 1/2 in. 8mm Shower door	833
139350	Incognito 70 56-59 x 70 1/2 in. 6mm Shower door	831
135694	Revelation Square 56-59 x 70 ½-73 - 8mm	852
136691	Revelation Round 56-59 x 70 1/2-73	846
135691	Revelation Square 56-59 x 70 ½-73 - 6mm	850
136694	Revelation Round 56-59 x 70 ½-73 - 8mm	848
139580	Reveal Sleek 71 56-59 x 71 1/2 - 8mm	905
136272	Duel 56-58 ½ x 70 ½ x 74 - 8 mm	829
134675	Kameleon SC 55-59 x 71 - 8mm	820
134572	Kameleon 55-59 x 71 - 8mm	827
134665	Kameleon SC 55-59 x 71 - 6mm	814
134565	Kameleon 55-59 x 71 - 6mm	822
136672	Reveal 71 56-59 x 71 ½ - 8mm	901
105412	Polar 54-59 ½ x 68 in.	845

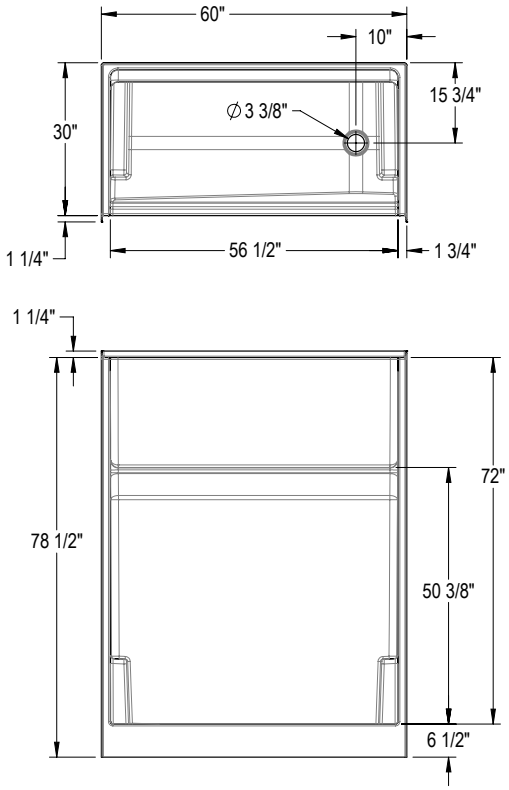

FHA Reinforcement Option

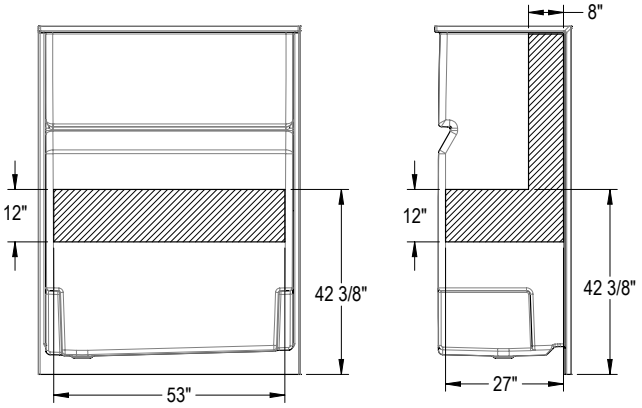

Full Wall Reinforcement Option

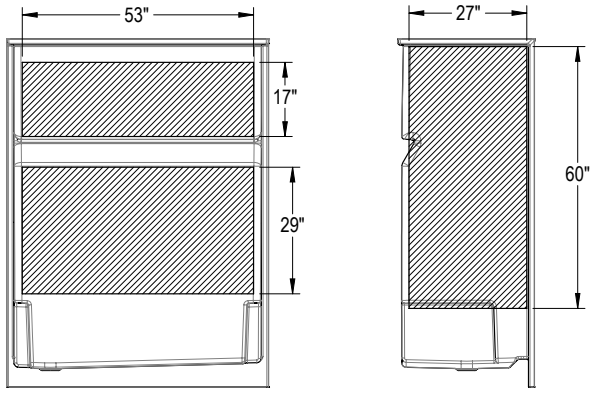

All dimensions are approximate. Structure measurements must be verified against the unit to ensure proper fit.

Icon SH6032

Material : AcrylX

Features

- Made of AcrylX™ applied acrylic for improved durability
- Slip-resistant textured bottom for additional safety
- Available with and without an Above-the-Floor Rough (AFR) configuration
- Built-in shelf provide generous storage space, making it easy to keep bathing essentials organized
- Pair with the optional teak wood seat to add functionnality to the shower space
- Smooth Walls for a modern and minimalist look
- Flat walls to easily accomodate future grab bars
- Two integrated and convenient footrests
- 1 Piece construction for easy installation and maintenance

ICON SH6032 - 107660

SKU	Color	Configuration	Dimensions & Weight	Packaging	MSRP
107660-000-002-001	White	Left Drain / No Seat Seat	60” x 32 1/4” x 75 1/2” / 139 lb	89.28 ft^3	$ 2811
107660-000-002-002		Right Drain / No Seat Seat			$ 2811

COMMON OPTIONS

SKU	Description	MSRP
OPT20212-B	Back Wall reinforcement for future grab installation [33]	$ 105
OPT20212-L	Left Wall reinforcement for future grab installation [33]	$ 105
OPT20212-R	Right Wall reinforcement for future grab installation [33]	$ 105
OPT10189	Three-wall reinforcement for future grab bar installation [33]	$ 305
OPT20203-B-002	18 in. Modern straight grab bar [30] **OPT 20203-B-XXX Horizontal grab bar on back wall** Available colours: White **(002)**, Chrome **(084)** and Brushed Nickel **(105)**	$ 283
OPT20203-B-105		$ 283
OPT20203-B-084		$ 283
OPT20203-L-105	18 in. Modern straight grab bar [30] **OPT 20203-L-XXX Vertical grab bar on left wall** Available colours: White **(002)**, Chrome **(084)** and Brushed Nickel **(105)**	$ 283
OPT20203-L-002		$ 283
OPT20203-L-084		$ 283
OPT20203-R-084	18 in. Modern straight grab bar [30] **OPT 20203-R-XXX Vertical grab bar on right wall** Available colours: White **(002)**, Chrome **(084)** and Brushed Nickel **(105)**	$ 283
OPT20203-R-002		$ 283
OPT20203-R-105		$ 283
OPT20204-B-002	24 in. Modern straight grab bar [30] **OPT 20204-B-XXX Horizontal grab bar on back wall** Available colours: White **(002)**, Chrome **(084)** and Brushed Nickel **(105)**	$ 331
OPT20204-B-084		$ 331
OPT20204-B-105		$ 331
OPT20204-L-084	24 in. Modern straight grab bar [30] **OPT 20204-L-XXX Vertical grab bar on left wall** Available colours: White **(002)**, Chrome **(084)** and Brushed Nickel **(105)**	$ 331
OPT20204-L-105		$ 331
OPT20204-L-002		$ 331
OPT20204-R-002	24 in. Modern straight grab bar [30] **OPT 20204-R-XXX Vertical grab bar on right wall** Available colours: White **(002)**, Chrome **(084)** and Brushed Nickel **(105)**	$ 331
OPT20204-R-084		$ 331
OPT20204-R-105		$ 331
OPT20217-L-105	32 in. Curved grab bar (back wall) [3031] **OPT 20217-L-XXX Left-hand curved grab bar on back wall** Available colours: White **(002)**, Chrome **(084)** and Brushed Nickel **(105)**	$ 584
OPT20217-L-002		$ 584
OPT20217-L-084		$ 584
OPT20217-R-002	32 in. Curved grab bar (back wall) [3031] **OPT 20217-R-XXX Right-hand curved grab bar on back wall** Available colours: White **(002)**, Chrome **(084)** and Brushed Nickel **(105)**	$ 584

Go to Table of Contents

COMMON OPTIONS

SKU	Description	MSRP
OPT20217-R-105	32 in. Curved grab bar (back wall) [3031]	$ 584
OPT20217-R-084	**OPT 20217-R-XXX Right-hand curved grab bar on back wall** Available colours: White **(002)**, Chrome **(084)** and Brushed Nickel **(105)**	$ 584

FOOTNOTES

No	Description
30	Please see technical drawings on https://www.maax.com for grab bar and/or seat positioning.
31	Right (R)/Left (L) refers to the upper section of the ergonomic grab bar.
33	Please see technical drawings on https://www.maax.com for reinforcement positioning and size.

RECOMMENDED DOORS - VISIT OUR WEBSITE FOR A COMPLETE LIST OF RECOMMENDED DOORS

SKU	Product Name	Pag.
138276	Manhattan 55-57 x 68 - 6mm	892
139353	Incognito 70 56-59 x 70 1/2 in. 8mm Shower door	833
139350	Incognito 70 56-59 x 70 1/2 in. 6mm Shower door	831
135694	Revelation Square 56-59 x 70 ½-73 - 8mm	852
136691	Revelation Round 56-59 x 70 1/2-73	846
135691	Revelation Square 56-59 x 70 ½-73 - 6mm	850
136694	Revelation Round 56-59 x 70 ½-73 - 8mm	848
139580	Reveal Sleek 71 56-59 x 71 1/2 - 8mm	905
136272	Duel 56-58 ½ x 70 ½ x 74 - 8 mm	829
134675	Kameleon SC 55-59 x 71 - 8mm	820
134572	Kameleon 55-59 x 71 - 8mm	827
134665	Kameleon SC 55-59 x 71 - 6mm	814
134565	Kameleon 55-59 x 71 - 6mm	822
136672	Reveal 71 56-59 x 71 ½ - 8mm	901
105412	Polar 54-59 ½ x 68 in.	845

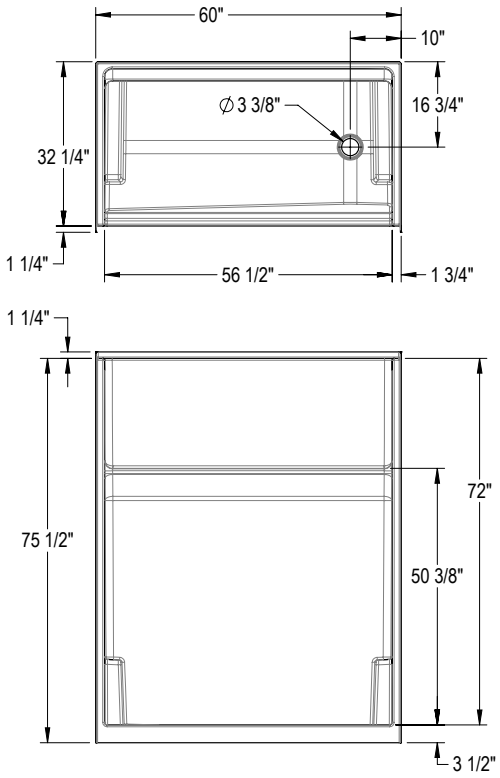

All dimensions are approximate. Structure measurements must be verified against the unit to ensure proper fit.

FHA Reinforcement Option

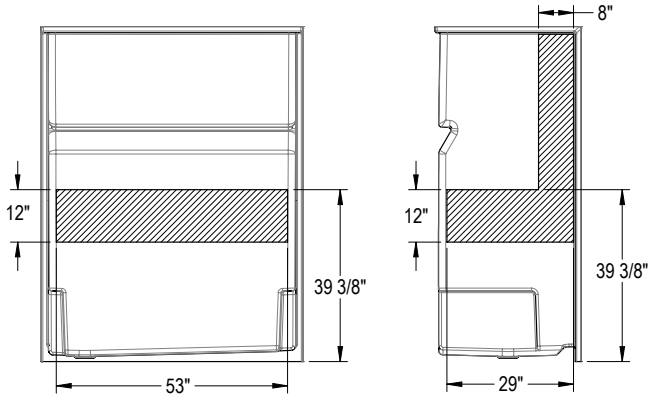

Full Wall Reinforcement Option

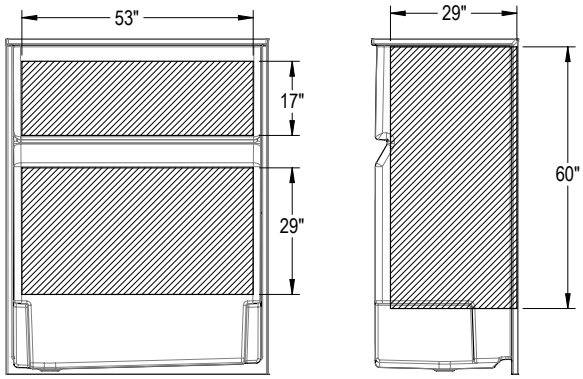

Icon SH6032X AFR

Material : AcrylX

Features

- Made of AcrylX™ applied acrylic for improved durability
- Slip-resistant textured bottom for additional safety
- Available with and without an Above-the-Floor Rough (AFR) configuration
- Built-in shelf provide generous storage space, making it easy to keep bathing essentials organized
- Pair with the optional teak wood seat to add functionnality to the shower space
- Smooth Walls for a modern and minimalist look
- Flat walls to easily accomodate future grab bars
- Two integrated and convenient footrests
- 1 Piece construction for easy installation and maintenance

ICON SH6032X AFR - 107663

SKU	Color	Configuration	Dimensions & Weight	Packaging	MSRP
107663-000-002-501	White	Left Drain / No Seat Seat	60” x 32 1/4” x 78 1/2” / 141 lb	92.77 ft^3	$ 2811
107663-000-002-502		Right Drain / No Seat Seat			$ 2811

COMMON OPTIONS

SKU	Description	MSRP
OPT20212-B	Back Wall reinforcement for future grab installation [33]	$ 105
OPT20212-L	Left Wall reinforcement for future grab installation [33]	$ 105
OPT20212-R	Right Wall reinforcement for future grab installation [33]	$ 105
OPT10189	Three-wall reinforcement for future grab bar installation [33]	$ 305
OPT20203-B-002	18 in. Modern straight grab bar [30] **OPT 20203-B-XXX Horizontal grab bar on back wall** Available colours: White **(002)**, Chrome **(084)** and Brushed Nickel **(105)**	$ 283
OPT20203-B-105		$ 283
OPT20203-B-084		$ 283
OPT20203-L-105	18 in. Modern straight grab bar [30] **OPT 20203-L-XXX Vertical grab bar on left wall** Available colours: White **(002)**, Chrome **(084)** and Brushed Nickel **(105)**	$ 283
OPT20203-L-002		$ 283
OPT20203-L-084		$ 283
OPT20203-R-084	18 in. Modern straight grab bar [30] **OPT 20203-R-XXX Vertical grab bar on right wall** Available colours: White **(002)**, Chrome **(084)** and Brushed Nickel **(105)**	$ 283
OPT20203-R-002		$ 283
OPT20203-R-105		$ 283
OPT20204-B-002	24 in. Modern straight grab bar [30] **OPT 20204-B-XXX Horizontal grab bar on back wall** Available colours: White **(002)**, Chrome **(084)** and Brushed Nickel **(105)**	$ 331
OPT20204-B-084		$ 331
OPT20204-B-105		$ 331
OPT20204-L-084	24 in. Modern straight grab bar [30] **OPT 20204-L-XXX Vertical grab bar on left wall** Available colours: White **(002)**, Chrome **(084)** and Brushed Nickel **(105)**	$ 331
OPT20204-L-105		$ 331
OPT20204-L-002		$ 331
OPT20204-R-002	24 in. Modern straight grab bar [30] **OPT 20204-R-XXX Vertical grab bar on right wall** Available colours: White **(002)**, Chrome **(084)** and Brushed Nickel **(105)**	$ 331
OPT20204-R-084		$ 331
OPT20204-R-105		$ 331
OPT20217-L-105	32 in. Curved grab bar (back wall) [3031] **OPT 20217-L-XXX Left-hand curved grab bar on back wall** Available colours: White **(002)**, Chrome **(084)** and Brushed Nickel **(105)**	$ 584
OPT20217-L-002		$ 584
OPT20217-L-084		$ 584
OPT20217-R-002	32 in. Curved grab bar (back wall) [3031] **OPT 20217-R-XXX Right-hand curved grab bar on back wall** Available colours: White **(002)**, Chrome **(084)** and Brushed Nickel **(105)**	$ 584

COMMON OPTIONS

SKU	Description	MSRP
OPT20217-R-105	32 in. Curved grab bar (back wall) [3031]	$ 584
OPT20217-R-084	**OPT 20217-R-XXX Right-hand curved grab bar on back wall** Available colours: White **(002)**, Chrome **(084)** and Brushed Nickel **(105)**	$ 584

FOOTNOTES

No	Description
30	Please see technical drawings on https://www.maax.com for grab bar and/or seat positioning.
31	Right (R)/Left (L) refers to the upper section of the ergonomic grab bar.
33	Please see technical drawings on https://www.maax.com for reinforcement positioning and size.

RECOMMENDED DOORS - VISIT OUR WEBSITE FOR A COMPLETE LIST OF RECOMMENDED DOORS

SKU	Product Name	Pag.
138276	Manhattan 55-57 x 68 - 6mm	892
139353	Incognito 70 56-59 x 70 1/2 in. 8mm Shower door	833
139350	Incognito 70 56-59 x 70 1/2 in. 6mm Shower door	831
135694	Revelation Square 56-59 x 70 ½-73 - 8mm	852
136691	Revelation Round 56-59 x 70 1/2-73	846
135691	Revelation Square 56-59 x 70 ½-73 - 6mm	850
136694	Revelation Round 56-59 x 70 ½-73 - 8mm	848
139580	Reveal Sleek 71 56-59 x 71 1/2 - 8mm	905
136272	Duel 56-58 ½ x 70 ½ x 74 - 8 mm	829
134675	Kameleon SC 55-59 x 71 - 8mm	820
134572	Kameleon 55-59 x 71 - 8mm	827
134665	Kameleon SC 55-59 x 71 - 6mm	814
134565	Kameleon 55-59 x 71 - 6mm	822
136672	Reveal 71 56-59 x 71 ½ - 8mm	901
105412	Polar 54-59 ½ x 68 in.	845

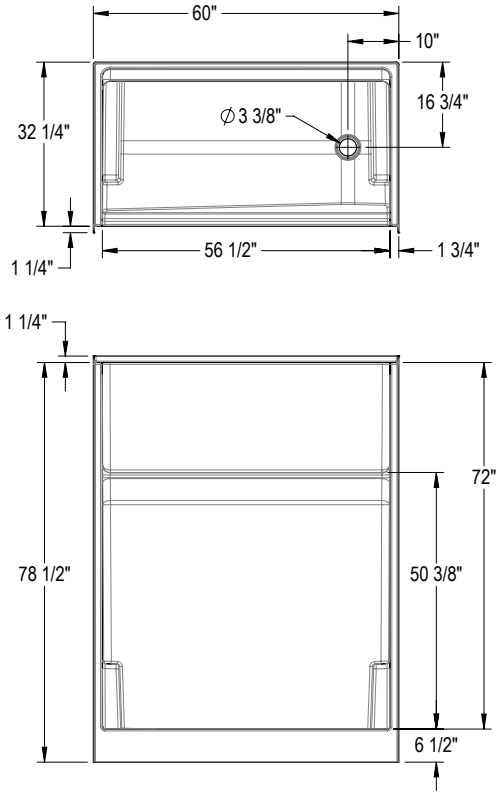

FHA Reinforcement Option

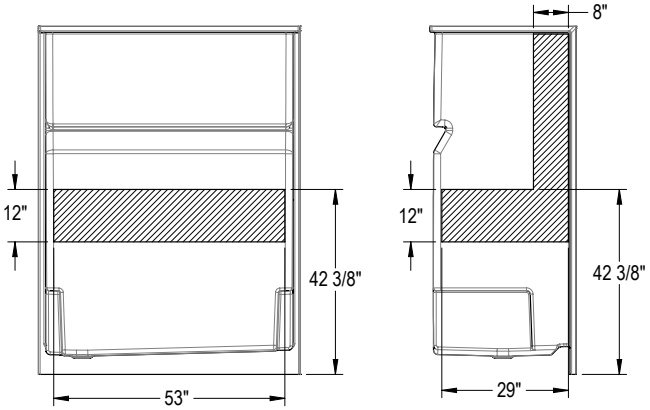

Full Wall Reinforcement Option

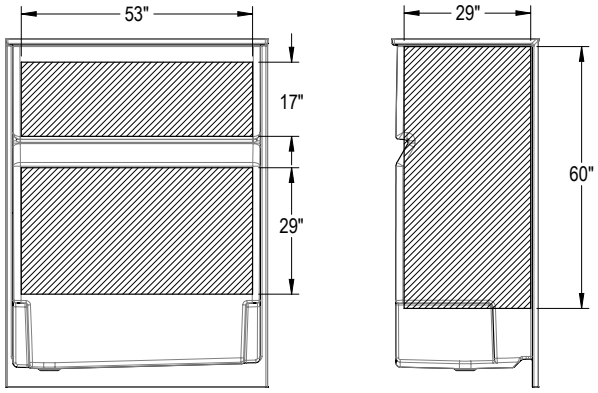

All dimensions are approximate. Structure measurements must be verified against the unit to ensure proper fit.

Icon SH6034

Material : AcrylX

Features

- Made of AcrylX™ applied acrylic for improved durability
- Slip-resistant textured bottom for additional safety
- Available with and without an Above-the-Floor Rough (AFR) configuration
- Built-in shelf provide generous storage space, making it easy to keep bathing essentials organized
- Pair with the optional teak wood seat to add functionnality to the shower space
- Smooth Walls for a modern and minimalist look
- Flat walls to easily accomodate future grab bars
- Two integrated and convenient footrests
- 1 Piece construction for easy installation and maintenance

ICON SH6034 - 107661

SKU	Color	Configuration	Dimensions & Weight	Packaging	MSRP
107661-000-002-000	White	Center Drain / No Seat Seat	60” x 33 1/2” x 75 1/2” / 140 lb	92.61 ft^3	$ 2867

COMMON OPTIONS

SKU	Description	MSRP
OPT20212-B	Back Wall reinforcement for future grab installation [33]	$ 105
OPT20212-L	Left Wall reinforcement for future grab installation [33]	$ 105
OPT20212-R	Right Wall reinforcement for future grab installation [33]	$ 105
OPT10189	Three-wall reinforcement for future grab bar installation [33]	$ 305
OPT20203-B-002	18 in. Modern straight grab bar [30] **OPT 20203-B-XXX Horizontal grab bar on back wall** Available colours: White **(002)**, Chrome **(084)** and Brushed Nickel **(105)**	$ 283
OPT20203-B-105		$ 283
OPT20203-B-084		$ 283
OPT20203-L-105	18 in. Modern straight grab bar [30] **OPT 20203-L-XXX Vertical grab bar on left wall** Available colours: White **(002)**, Chrome **(084)** and Brushed Nickel **(105)**	$ 283
OPT20203-L-002		$ 283
OPT20203-L-084		$ 283
OPT20203-R-084	18 in. Modern straight grab bar [30] **OPT 20203-R-XXX Vertical grab bar on right wall** Available colours: White **(002)**, Chrome **(084)** and Brushed Nickel **(105)**	$ 283
OPT20203-R-002		$ 283
OPT20203-R-105		$ 283
OPT20204-B-002	24 in. Modern straight grab bar [30] **OPT 20204-B-XXX Horizontal grab bar on back wall** Available colours: White **(002)**, Chrome **(084)** and Brushed Nickel **(105)**	$ 331
OPT20204-B-084		$ 331
OPT20204-B-105		$ 331
OPT20204-L-084	24 in. Modern straight grab bar [30] **OPT 20204-L-XXX Vertical grab bar on left wall** Available colours: White **(002)**, Chrome **(084)** and Brushed Nickel **(105)**	$ 331
OPT20204-L-105		$ 331
OPT20204-L-002		$ 331
OPT20204-R-002	24 in. Modern straight grab bar [30] **OPT 20204-R-XXX Vertical grab bar on right wall** Available colours: White **(002)**, Chrome **(084)** and Brushed Nickel **(105)**	$ 331
OPT20204-R-084		$ 331
OPT20204-R-105		$ 331
OPT20217-L-105	32 in. Curved grab bar (back wall) [3031] **OPT 20217-L-XXX Left-hand curved grab bar on back wall** Available colours: White **(002)**, Chrome **(084)** and Brushed Nickel **(105)**	$ 584
OPT20217-L-002		$ 584
OPT20217-L-084		$ 584
OPT20217-R-002	32 in. Curved grab bar (back wall) [3031] **OPT 20217-R-XXX Right-hand curved grab bar on back wall** Available colours: White **(002)**, Chrome **(084)** and Brushed Nickel **(105)**	$ 584

Go to Table of Contents

COMMON OPTIONS

SKU	Description	MSRP
OPT20217-R-105	32 in. Curved grab bar (back wall) [3031]	$ 584
OPT20217-R-084	**OPT 20217-R-XXX Right-hand curved grab bar on back wall** Available colours: White **(002)**, Chrome **(084)** and Brushed Nickel **(105)**	$ 584

FOOTNOTES

No	Description
30	Please see technical drawings on https://www.maax.com for grab bar and/or seat positioning.
31	Right (R)/Left (L) refers to the upper section of the ergonomic grab bar.
33	Please see technical drawings on https://www.maax.com for reinforcement positioning and size.

RECOMMENDED DOORS - VISIT OUR WEBSITE FOR A COMPLETE LIST OF RECOMMENDED DOORS

SKU	Product Name	Pag.
138276	Manhattan 55-57 x 68 - 6mm	892
139353	Incognito 70 56-59 x 70 1/2 in. 8mm Shower door	833
139350	Incognito 70 56-59 x 70 1/2 in. 6mm Shower door	831
135694	Revelation Square 56-59 x 70 ½-73 - 8mm	852
136691	Revelation Round 56-59 x 70 1/2-73	846
135691	Revelation Square 56-59 x 70 ½-73 - 6mm	850
136694	Revelation Round 56-59 x 70 ½-73 - 8mm	848
139580	Reveal Sleek 71 56-59 x 71 1/2 - 8mm	905
136272	Duel 56-58 ½ x 70 ½ x 74 - 8 mm	829
134675	Kameleon SC 55-59 x 71 - 8mm	820
134572	Kameleon 55-59 x 71 - 8mm	827
134665	Kameleon SC 55-59 x 71 - 6mm	814
134565	Kameleon 55-59 x 71 - 6mm	822
136672	Reveal 71 56-59 x 71 ½ - 8mm	901
105412	Polar 54-59 ½ x 68 in.	845

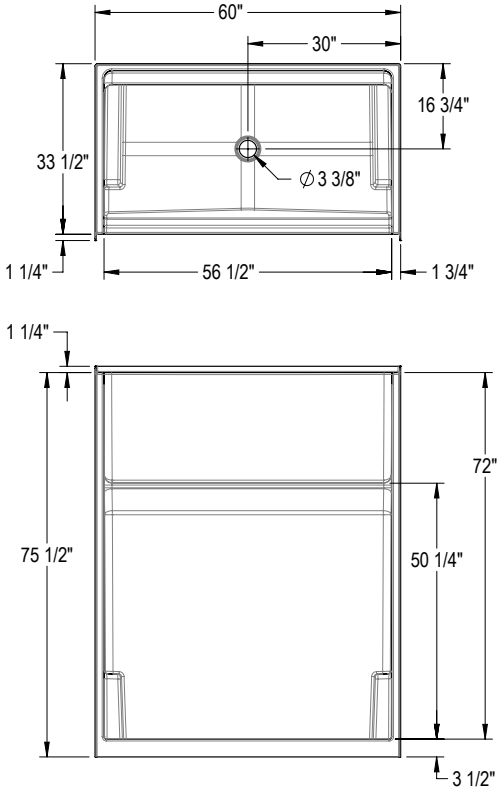

FHA Reinforcement Option

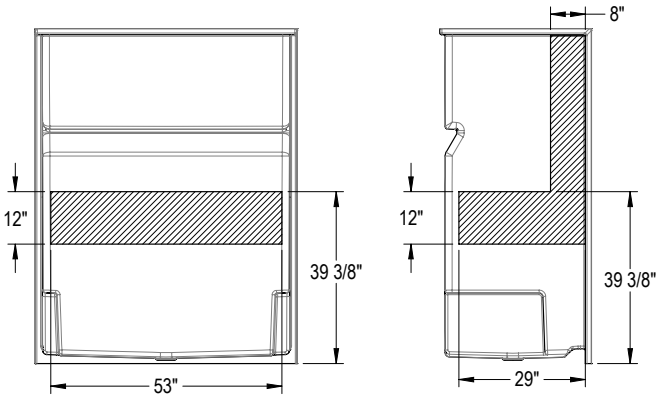

Full Wall Reinforcement Option

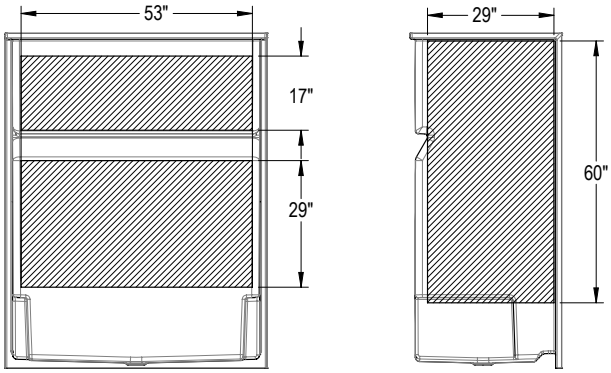

All dimensions are approximate. Structure measurements must be verified against the unit to ensure proper fit.

Icon SH6034X AFR

Material : AcrylX

Features

- Made of AcrylX™ applied acrylic for improved durability
- Slip-resistant textured bottom for additional safety
- Available with and without an Above-the-Floor Rough (AFR) configuration
- Built-in shelf provide generous storage space, making it easy to keep bathing essentials organized
- Pair with the optional teak wood seat to add functionnality to the shower space
- Smooth Walls for a modern and minimalist look
- Flat walls to easily accomodate future grab bars
- Two integrated and convenient footrests
- 1 Piece construction for easy installation and maintenance

ICON SH6034X AFR - 107664

SKU	Color	Configuration	Dimensions & Weight	Packaging	MSRP
107664-000-002-500	White	Center Drain / No Seat Seat	60” x 33 1/2” x 78 1/2” / 142 lb	96.23 ft^3	$ 2867

COMMON OPTIONS

SKU	Description	MSRP
OPT20212-B	Back Wall reinforcement for future grab installation [33]	$ 105
OPT20212-L	Left Wall reinforcement for future grab installation [33]	$ 105
OPT20212-R	Right Wall reinforcement for future grab installation [33]	$ 105
OPT10189	Three-wall reinforcement for future grab bar installation [33]	$ 305
OPT20203-B-002	18 in. Modern straight grab bar [30] **OPT 20203-B-XXX Horizontal grab bar on back wall** Available colours: White **(002)**, Chrome **(084)** and Brushed Nickel **(105)**	$ 283
OPT20203-B-105		$ 283
OPT20203-B-084		$ 283
OPT20203-L-105	18 in. Modern straight grab bar [30] **OPT 20203-L-XXX Vertical grab bar on left wall** Available colours: White **(002)**, Chrome **(084)** and Brushed Nickel **(105)**	$ 283
OPT20203-L-002		$ 283
OPT20203-L-084		$ 283
OPT20203-R-084	18 in. Modern straight grab bar [30] **OPT 20203-R-XXX Vertical grab bar on right wall** Available colours: White **(002)**, Chrome **(084)** and Brushed Nickel **(105)**	$ 283
OPT20203-R-002		$ 283
OPT20203-R-105		$ 283
OPT20204-B-002	24 in. Modern straight grab bar [30] **OPT 20204-B-XXX Horizontal grab bar on back wall** Available colours: White **(002)**, Chrome **(084)** and Brushed Nickel **(105)**	$ 331
OPT20204-B-084		$ 331
OPT20204-B-105		$ 331
OPT20204-L-084	24 in. Modern straight grab bar [30] **OPT 20204-L-XXX Vertical grab bar on left wall** Available colours: White **(002)**, Chrome **(084)** and Brushed Nickel **(105)**	$ 331
OPT20204-L-105		$ 331
OPT20204-L-002		$ 331
OPT20204-R-002	24 in. Modern straight grab bar [30] **OPT 20204-R-XXX Vertical grab bar on right wall** Available colours: White **(002)**, Chrome **(084)** and Brushed Nickel **(105)**	$ 331
OPT20204-R-084		$ 331
OPT20204-R-105		$ 331
OPT20217-L-105	32 in. Curved grab bar (back wall) [3031] **OPT 20217-L-XXX Left-hand curved grab bar on back wall** Available colours: White **(002)**, Chrome **(084)** and Brushed Nickel **(105)**	$ 584
OPT20217-L-002		$ 584
OPT20217-L-084		$ 584
OPT20217-R-002	32 in. Curved grab bar (back wall) [3031] **OPT 20217-R-XXX Right-hand curved grab bar on back wall** Available colours: White **(002)**, Chrome **(084)** and Brushed Nickel **(105)**	$ 584

COMMON OPTIONS

SKU	Description	MSRP
OPT20217-R-105	32 in. Curved grab bar (back wall) [3031]	$ 584
OPT20217-R-084	**OPT 20217-R-XXX Right-hand curved grab bar on back wall** Available colours: White **(002)**, Chrome **(084)** and Brushed Nickel **(105)**	$ 584

FOOTNOTES

No	Description
30	Please see technical drawings on https://www.maax.com for grab bar and/or seat positioning.
31	Right (R)/Left (L) refers to the upper section of the ergonomic grab bar.
33	Please see technical drawings on https://www.maax.com for reinforcement positioning and size.

RECOMMENDED DOORS - VISIT OUR WEBSITE FOR A COMPLETE LIST OF RECOMMENDED DOORS

SKU	Product Name	Pag.
138276	Manhattan 55-57 x 68 - 6mm	892
139353	Incognito 70 56-59 x 70 1/2 in. 8mm Shower door	833
139350	Incognito 70 56-59 x 70 1/2 in. 6mm Shower door	831
135694	Revelation Square 56-59 x 70 ½-73 - 8mm	852
136691	Revelation Round 56-59 x 70 1/2-73	846
135691	Revelation Square 56-59 x 70 ½-73 - 6mm	850
136694	Revelation Round 56-59 x 70 ½-73 - 8mm	848
139580	Reveal Sleek 71 56-59 x 71 1/2 - 8mm	905
136272	Duel 56-58 ½ x 70 ½ x 74 - 8 mm	829
134675	Kameleon SC 55-59 x 71 - 8mm	820
134572	Kameleon 55-59 x 71 - 8mm	827
134665	Kameleon SC 55-59 x 71 - 6mm	814
134565	Kameleon 55-59 x 71 - 6mm	822
136672	Reveal 71 56-59 x 71 ½ - 8mm	901
105412	Polar 54-59 ½ x 68 in.	845

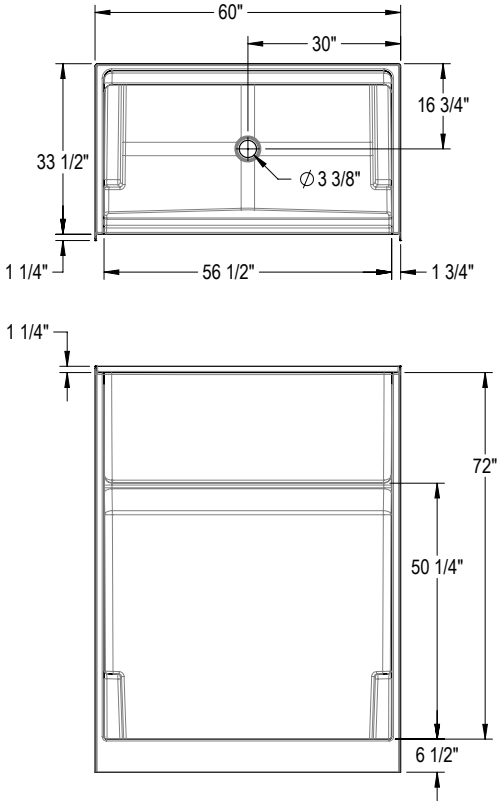

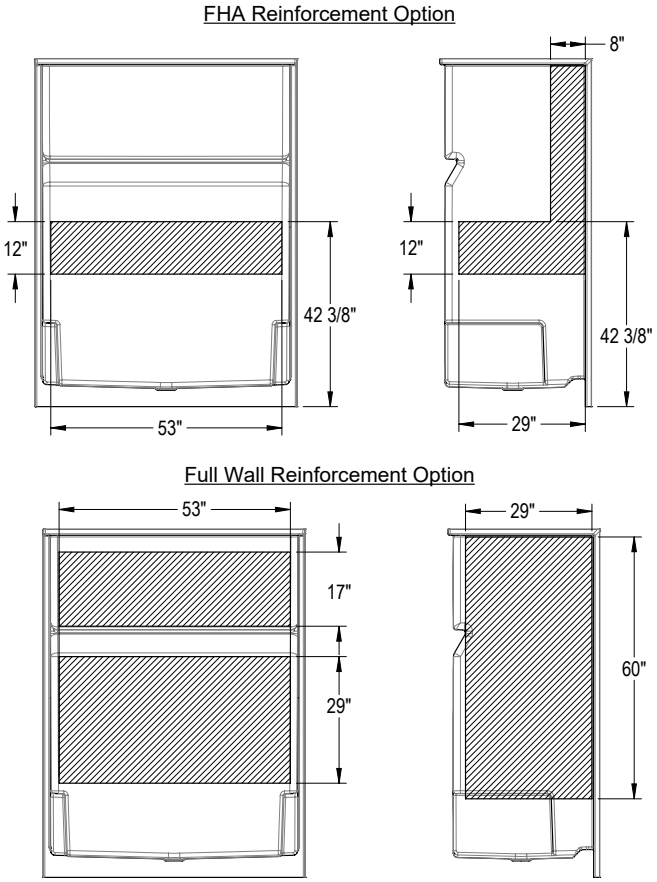

All dimensions are approximate. Structure measurements must be verified against the unit to ensure proper fit.

KDS 3060

Material : AcrylX

Features

- Model Size: 59.625 L in. X 30 W in. X 80.125 H in.
- AcrylX high gloss finish for improved durability
- Smooth walls for a modern and easy to maintain look
- 4 piece construction for easy handling and installation
- Innovative PIN system to lock the pieces in place and ease the installation
- Convenient storage for all bath essentials with a large top shelf, a soap dish and grab bar
- Model available without or with an integrated seat
- Textured bottom base for added safety
- Proudly made in North America

KDS 3060 - 145036

SKU	Color	Configuration	Dimensions & Weight	Packaging	MSRP
145036-000-002-093	White	Center Drain / No Seat Seat	59 5/8” x 30” x 80 1/8” / 152 lb	75.78 ft³	$ 2582
145036-000-002-094		Right Drain / Left Seat			$ 2582
145036-000-002-095		Left Drain / Right Seat			$ 2582

KDS 3060 AFR - 145037

SKU	Color	Configuration	Dimensions & Weight	Packaging	MSRP
145037-000-002-593	White	Center Drain / No Seat Seat	59 5/8” x 30” x 82 1/8” / 152 lb	75.78 ft³	$ 2582
145037-000-002-594		Right Drain / Left Seat			$ 2582
145037-000-002-595		Left Drain / Right Seat			$ 2582

COMMON OPTIONS

SKU	Description	MSRP
OPT20212-B	Back Wall reinforcement for future grab installation [33]	$ 105
OPT20212-L	Left Wall reinforcement for future grab installation [33]	$ 105
OPT20212-R	Right Wall reinforcement for future grab installation [33]	$ 105
OPT10109-084	Metallic finish grab bar replacing Acrylic grab bar Available colors: Chrome **(084)** and Brushed Nickel **(105)**	$ 345
OPT10109-105		$ 345
OPT20203-B-002	18 in. Modern straight grab bar [30] **OPT 20203-B-XXX Horizontal grab bar on back wall** Available colours: White **(002)**, Chrome **(084)** and Brushed Nickel **(105)**	$ 283
OPT20203-B-105		$ 283
OPT20203-B-084		$ 283
OPT20203-L-105	18 in. Modern straight grab bar [30] **OPT 20203-L-XXX Vertical grab bar on left wall** Available colours: White **(002)**, Chrome **(084)** and Brushed Nickel **(105)**	$ 283
OPT20203-L-002		$ 283
OPT20203-L-084		$ 283
OPT20203-R-084	18 in. Modern straight grab bar [30] **OPT 20203-R-XXX Vertical grab bar on right wall** Available colours: White **(002)**, Chrome **(084)** and Brushed Nickel **(105)**	$ 283
OPT20203-R-002		$ 283
OPT20203-R-105		$ 283
OPT20204-B-002	24 in. Modern straight grab bar [30] **OPT 20204-B-XXX Horizontal grab bar on back wall** Available colours: White **(002)**, Chrome **(084)** and Brushed Nickel **(105)**	$ 331
OPT20204-B-084		$ 331
OPT20204-B-105		$ 331
OPT20204-L-084	24 in. Modern straight grab bar [30] **OPT 20204-L-XXX Vertical grab bar on left wall** Available colours: White **(002)**, Chrome **(084)** and Brushed Nickel **(105)**	$ 331
OPT20204-L-105		$ 331
OPT20204-L-002		$ 331
OPT20204-R-002	24 in. Modern straight grab bar [30] **OPT 20204-R-XXX Vertical grab bar on right wall** Available colours: White **(002)**, Chrome **(084)** and Brushed Nickel **(105)**	$ 331

COMMON OPTIONS

SKU	Description	MSRP
OPT20204-R-084	24 in. Modern straight grab bar [30] **OPT 20204-R-XXX Vertical grab bar on right wall** Available colours: White **(002)**, Chrome **(084)** and Brushed Nickel **(105)**	$ 331
OPT20204-R-105		$ 331
145040-R-000-002	Shower base only with PIN system **145040-R-000-XXX Right seat, left drain** **145040-L-000-XXX Left seat, right drain** **145040-000-XXX No seat, center drain**	$ 1163
145040-L-000-002		$ 1163
145040-000-002		$ 1163
145048-000-002-090	Side walls (right and left) for KDTS 2954, KDTS 3060 and KDS 3060	$ 705
145061-000-002-090	Back wall for KDTS 3060, KDTS 3260, KDS 3060 and KDS 3460 [28]	$ 717

FOOTNOTES

No	Description
28	Handles for standard colour units are colour-coordinated. Handles with metallic finish can be added (additional charge applies). For non-standard colour units, please specify handle colour (additional charge applies for metallic finishes).
30	Please see technical drawings on https://www.maax.com for grab bar and/or seat positioning.
33	Please see technical drawings on https://www.maax.com for reinforcement positioning and size.

RECOMMENDED DOORS - VISIT OUR WEBSITE FOR A COMPLETE LIST OF RECOMMENDED DOORS

SKU	Product Name	Pag.
138276	Manhattan 55-57 x 68 - 6mm	892
139353	Incognito 70 56-59 x 70 1/2 in. 8mm Shower door	833
139350	Incognito 70 56-59 x 70 1/2 in. 6mm Shower door	831
135694	Revelation Square 56-59 x 70 ½-73 - 8mm	852
136691	Revelation Round 56-59 x 70 1/2-73	846
135691	Revelation Square 56-59 x 70 ½-73 - 6mm	850
136694	Revelation Round 56-59 x 70 ½-73 - 8mm	848
139580	Reveal Sleek 71 56-59 x 71 1/2 - 8mm	905
136272	Duel 56-58 ½ x 70 ½ x 74 - 8 mm	829
138762	Inverto 56-59 x 70 ½-74 - 8mm	843
134675	Kameleon SC 55-59 x 71 - 8mm	820
134572	Kameleon 55-59 x 71 - 8mm	827
134665	Kameleon SC 55-59 x 71 - 6mm	814
134565	Kameleon 55-59 x 71 - 6mm	822
136672	Reveal 71 56-59 x 71 ½ - 8mm	901
105412	Polar 54-59 ½ x 68 in.	845

STANDARD

NO SEAT

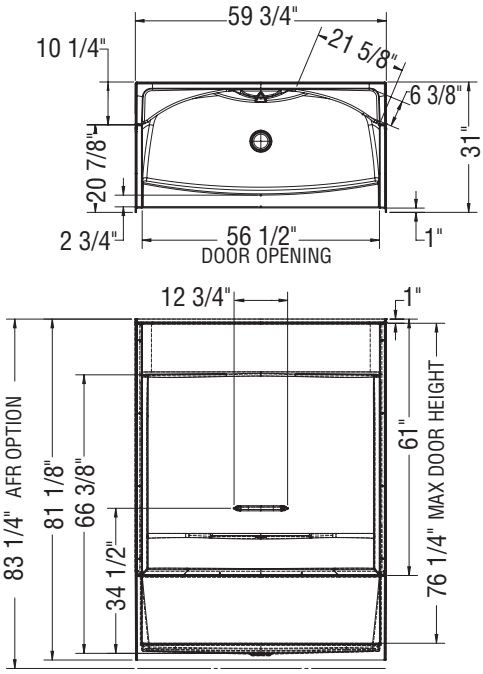

RIGHT SEAT SHOWN
LEFT SEAT SYMMETRICAL

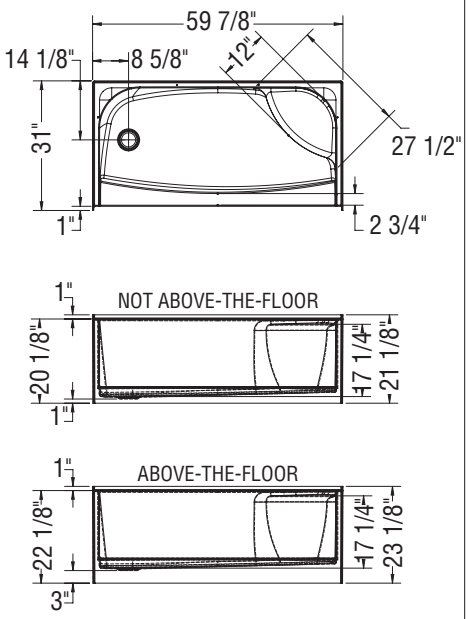

REINFORCEMENT BACKING

OPTION 20212-R RIGHT WALL SHOWN
OPTION 20212-L LEFT WALL SYMMETRICAL

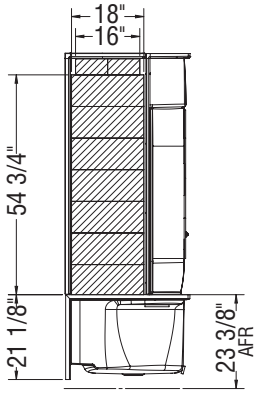

OPTION 20212-B BACK WALL

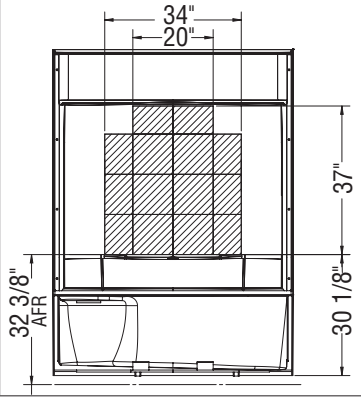

GRAB BARS

OPTION 20203

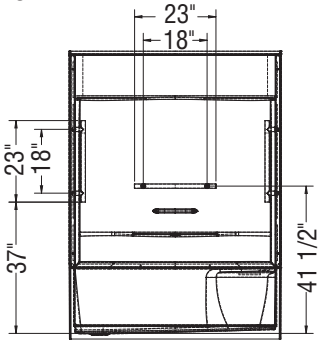

OPTION 20204

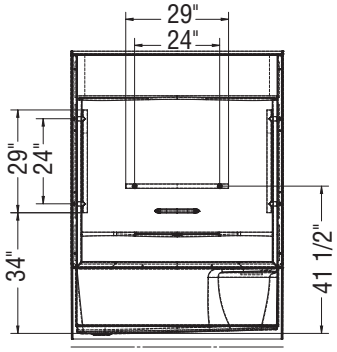

OPTION
20203-20204

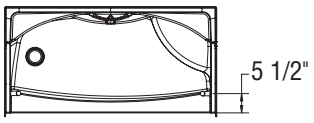

All dimensions are approximate. Structure measurements must be verified against the unit to ensure proper fit.

KDS 3232

Material : AcrylX

Features

- Model Size: 31.625 L in. X 32 W in. X 76 H in.
- AcrylX high gloss finish for improved durability
- Smooth walls for a modern and easy to maintain look
- 4 piece construction for easy handling and installation
- Innovative PIN system to lock the pieces in place and ease the installation
- Convenient storage for all bath essentials with a large top shelf and a grab bar
- Model with two integrated footrests
- Textured bottom base for added safety
- Proudly made in North America

KDS 3232 - 145018

SKU	Color	Configuration	Dimensions & Weight	Packaging	MSRP
145018-000-002-093	White	Center Drain / No Seat Seat	31 5/8” x 32” x 76” / 122 lb	61.53 ft^3	$ 1959

KDS 3232 AFR - 145019

SKU	Color	Configuration	Dimensions & Weight	Packaging	MSRP
145019-000-002-593	White	Center Drain / No Seat Seat	31 5/8” x 32” x 79 1/2” / 122 lb	61.53 ft^3	$ 1959

COMMON OPTIONS

SKU	Description	MSRP
OPT20212-L	Left Wall reinforcement for future grab installation [33]	$ 105
OPT20212-R	Right Wall reinforcement for future grab installation [33]	$ 105
OPT10109-084	Metallic finish grab bar replacing Acrylic grab bar Available colors: Chrome **(084)** and Brushed Nickel **(105)**	$ 345
OPT10109-105		$ 345
OPT20203-B-002	18 in. Modern straight grab bar [30] **OPT 20203-B-XXX Horizontal grab bar on back wall** Available colours: White **(002)**, Chrome **(084)** and Brushed Nickel **(105)**	$ 283
OPT20203-B-105		$ 283
OPT20203-B-084		$ 283
OPT20203-L-105	18 in. Modern straight grab bar [30] **OPT 20203-L-XXX Vertical grab bar on left wall** Available colours: White **(002)**, Chrome **(084)** and Brushed Nickel **(105)**	$ 283
OPT20203-L-002		$ 283
OPT20203-L-084		$ 283
OPT20203-R-084	18 in. Modern straight grab bar [30] **OPT 20203-R-XXX Vertical grab bar on right wall** Available colours: White **(002)**, Chrome **(084)** and Brushed Nickel **(105)**	$ 283
OPT20203-R-002		$ 283
OPT20203-R-105		$ 283
OPT20204-L-084	24 in. Modern straight grab bar [30] **OPT 20204-L-XXX Vertical grab bar on left wall** Available colours: White **(002)**, Chrome **(084)** and Brushed Nickel **(105)**	$ 331
OPT20204-L-105		$ 331
OPT20204-L-002		$ 331
OPT20204-R-002	24 in. Modern straight grab bar [30] **OPT 20204-R-XXX Vertical grab bar on right wall** Available colours: White **(002)**, Chrome **(084)** and Brushed Nickel **(105)**	$ 331
OPT20204-R-084		$ 331
OPT20204-R-105		$ 331
OPT20212-B	Back Wall reinforcement for future grab installation [33]	$ 105
145022-000-002	Shower base only with PIN system **145022-000-XXX Center drain**	$ 692
145054-000-002-090	Side walls (right and left) for KDS 3232 and KDS 3636	$ 707
145062-000-002-090	Back wall for KDS 3232 [28]	$ 565

FOOTNOTES

No	Description
28	Handles for standard colour units are colour-coordinated. Handles with metallic finish can be added (additional charge applies). For non-standard colour units, please specify handle colour (additional charge applies for metallic finishes).
30	Please see technical drawings on https://www.maax.com for grab bar and/or seat positioning.
33	Please see technical drawings on https://www.maax.com for reinforcement positioning and size.

RECOMMENDED DOORS - VISIT OUR WEBSITE FOR A COMPLETE LIST OF RECOMMENDED DOORS

SKU	Product Name	Pag.
138262	Manhattan 27-29 x 68 - 6mm	888
105416	Madono 28 ½-30 ½ x 67 - 6mm	886
136635	Pivolok 27-28 ¾ x 64 ½ in.	896

STANDARD

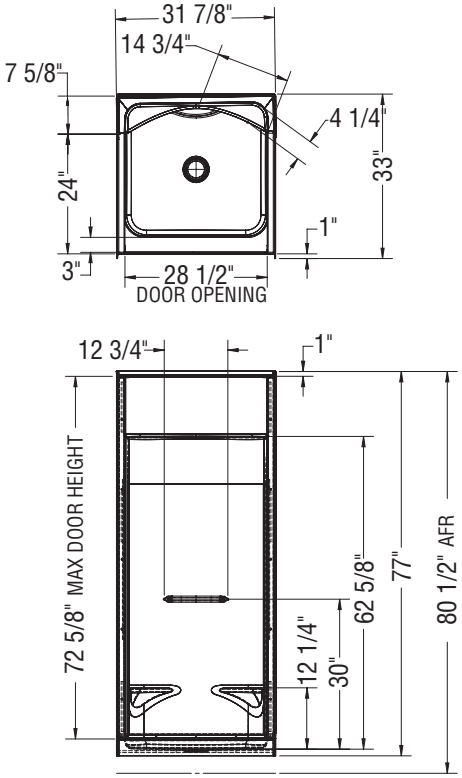

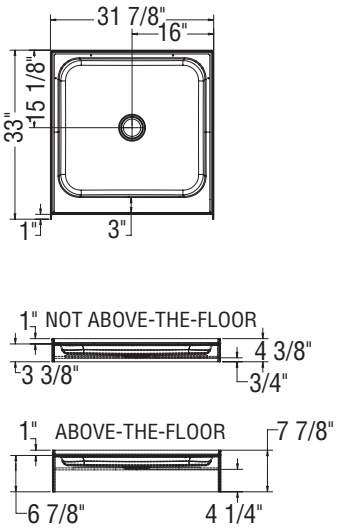

REINFORCEMENT BACKING

OPTION 20212-R RIGHT WALL SHOWN
OPTION 20212-L LEFT WALL SYMMETRICAL

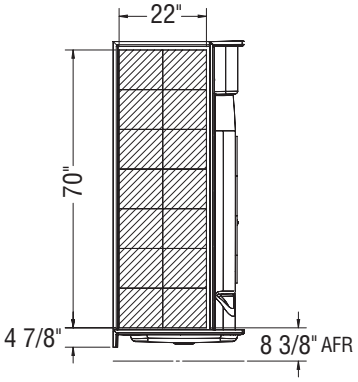

OPTION 20212-B BACK WALL

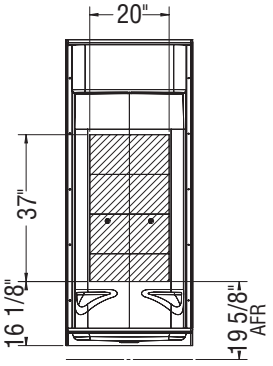

GRAB BARS

OPTION 20203

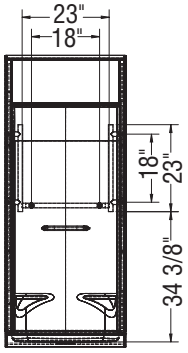

OPTION 20204

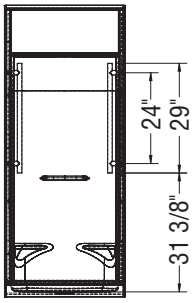

OPTION
20203-20204

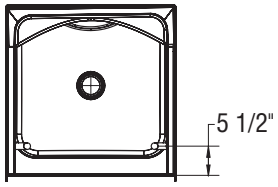

All dimensions are approximate. Structure measurements must be verified against the unit to ensure proper fit.

KDS 3448

Material : AcrylX

Features

- Model Size: 47.625 L in. X 33.5 W in. X 80.188 H in.
- AcrylX high gloss finish for improved durability
- Smooth walls for a modern and easy to maintain look
- 4 piece construction for easy handling and installation
- Innovative PIN system to lock the pieces in place and ease the installation
- Convenient storage for all bath essentials with a large top shelf, a soap dish and grab bar
- Model available without or with an integrated seat
- Textured bottom base for added safety
- Proudly made in North America

KDS 3448 - 145030

SKU	Color	Configuration	Dimensions & Weight	Packaging	MSRP
145030-000-002-093	White	Center Drain / No Seat Seat	47 5/8” x 33 1/2” x 80.188” / 141 lb	67.47 ft³	$ 2451
145030-000-002-094		Center Drain / Left Seat			$ 2451
145030-000-002-095		Center Drain / Right Seat			$ 2451

KDS 3448 AFR - 145031

SKU	Color	Configuration	Dimensions & Weight	Packaging	MSRP
145031-000-002-593	White	Center Drain / No Seat Seat	47 5/8” x 33 1/2” x 82 1/4” / 141 lb	67.47 ft³	$ 2451
145031-000-002-594		Center Drain / Left Seat			$ 2451
145031-000-002-595		Center Drain / Right Seat			$ 2451

COMMON OPTIONS

SKU	Description	MSRP
OPT20212-L	Left Wall reinforcement for future grab installation [33]	$ 105
OPT20212-R	Right Wall reinforcement for future grab installation [33]	$ 105
OPT10109-084	Metallic finish grab bar replacing Acrylic grab bar Available colors: Chrome **(084)** and Brushed Nickel **(105)**	$ 345
OPT10109-105		$ 345
OPT20203-B-002	18 in. Modern straight grab bar [30] **OPT 20203-B-XXX Horizontal grab bar on back wall** Available colours: White **(002)**, Chrome **(084)** and Brushed Nickel **(105)**	$ 283
OPT20203-B-105		$ 283
OPT20203-B-084		$ 283
OPT20203-L-105	18 in. Modern straight grab bar [30] **OPT 20203-L-XXX Vertical grab bar on left wall** Available colours: White **(002)**, Chrome **(084)** and Brushed Nickel **(105)**	$ 283
OPT20203-L-002		$ 283
OPT20203-L-084		$ 283
OPT20203-R-084	18 in. Modern straight grab bar [30] **OPT 20203-R-XXX Vertical grab bar on right wall** Available colours: White **(002)**, Chrome **(084)** and Brushed Nickel **(105)**	$ 283
OPT20203-R-002		$ 283
OPT20203-R-105		$ 283
OPT20204-L-084	24 in. Modern straight grab bar [30] **OPT 20204-L-XXX Vertical grab bar on left wall** Available colours: White **(002)**, Chrome **(084)** and Brushed Nickel **(105)**	$ 331
OPT20204-L-105		$ 331
OPT20204-L-002		$ 331
OPT20204-R-002	24 in. Modern straight grab bar [30] **OPT 20204-R-XXX Vertical grab bar on right wall** Available colours: White **(002)**, Chrome **(084)** and Brushed Nickel **(105)**	$ 331
OPT20204-R-084		$ 331
OPT20204-R-105		$ 331
OPT20212-B	Back Wall reinforcement for future grab installation [33]	$ 105

COMMON OPTIONS

SKU	Description	MSRP
145035-L-000-002	Shower base only with AFR with pin system **145035-R-000-XXX Above-the-Floor Rough, Right seat, center drain** **145035-L-000-XXX Above-the-Floor Rough, Left seat, center drain** **145035-000-XXX Above-the-Floor Rough, No seat, center drain**	$ 1008
145035-000-002		$ 1008
145035-R-000-002		$ 1008
145057-000-002-090	Side walls (right and left) for KDS 3448 and KDS 3460	$ 772
145064-000-002-090	Back wall for KDS 3448 [28]	$ 672

FOOTNOTES

No	Description
28	Handles for standard colour units are colour-coordinated. Handles with metallic finish can be added (additional charge applies). For non-standard colour units, please specify handle colour (additional charge applies for metallic finishes).
30	Please see technical drawings on https://www.maax.com for grab bar and/or seat positioning.
33	Please see technical drawings on https://www.maax.com for reinforcement positioning and size.

RECOMMENDED DOORS - VISIT OUR WEBSITE FOR A COMPLETE LIST OF RECOMMENDED DOORS

SKU	Product Name	Pag.
138270	Manhattan 43-45 x 68	892
139352	Incognito 70 44-47 x 70 1/2 in. 8mm Shower Door	833
139349	Incognito 70 44-47 x 70 1/2 in. 6mm Shower Door	831
136690	Revelation Round 44-47 x 70 1/2-73	846
135693	Revelation Square 44-47 x 70 ½-73 - 8mm	852
136693	Revelation Round 44-47 x 70 ½-73 - 8mm	848
135690	Revelation Square 44-47 x 70 ½-73 - 6mm	850
135235	Connect Pro 43 ½-45 x 76 - 6mm	862
139577	Reveal Sleek 71 41 1/2-44 1/2 x 71 1/2 - 8mm	904
139578	Reveal Sleek 71 44-47 x 71 1/2 - 8mm	904
138761	Inverto 43-47 x 70 ½-74 - 8mm	843
136271	Duel 44-47 x 70 1/2-74	829
134663	Kameleon SC 43-47 x 71 - 6mm	818
134571	Kameleon 43-47 x 71 - 8mm	827
134674	Kameleon SC 43-47 x 71 - 8mm	820
134563	Kameleon 43-47 x 71 - 6mm	822
138992	Luminescence 44 ½-47 x 70 ½-72 - 6mm	872
136677	Reveal 71 41 ½-44 ½ x 71 ½ - 8mm	901
136671	Reveal 71 44-47 x 71 ½ - 8mm	901
105413	Polar 42-47 ½ x 68 in.	845

STANDARD

NO SEAT

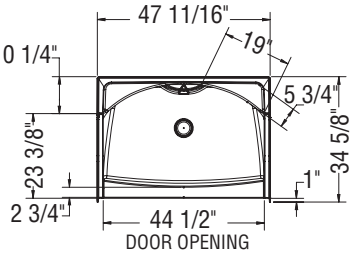

RIGHT SEAT SHOWN
LEFT SEAT SYMMETRICAL

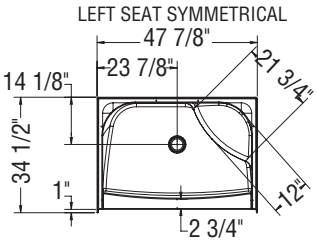

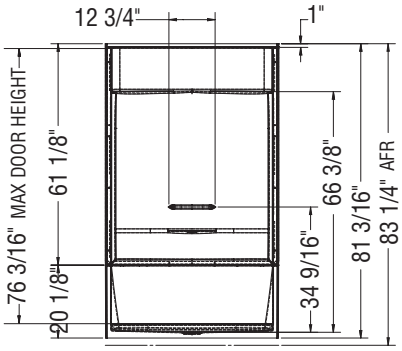

NOT ABOVE-THE-FLOOR

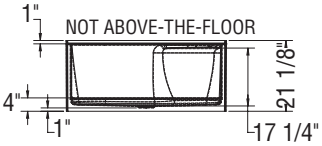

ABOVE-THE-FLOOR

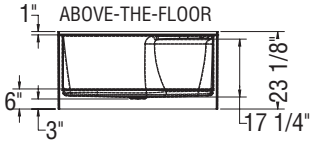

REINFORCEMENT BACKING

OPTION 20212-R RIGHT WALL SHOWN
OPTION 20212-L LEFT WALL SYMMETRICAL

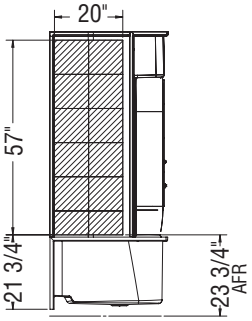

OPTION 20212-B BACK WALL

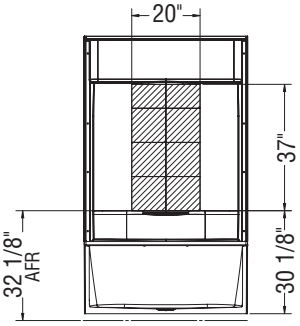

GRAB BARS

OPTION 20203

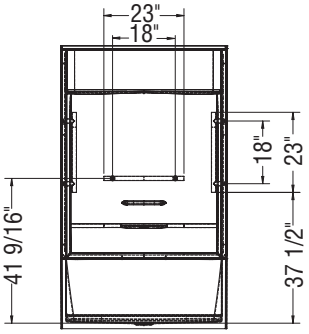

OPTION 20204

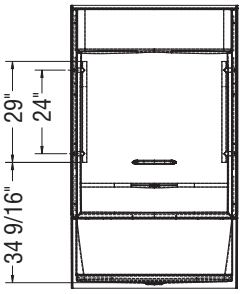

OPTION
20203-20204

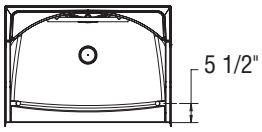

All dimensions are approximate. Structure measurements must be verified against the unit to ensure proper fit.
*Dimensions indicated on product pages exclude tiling flanges.

KDS 3460

Material : AcrylX

Features

- Model Size: 59.625 L in. X 33.5 W in. X 80.125 H in.
- AcrylX high gloss finish for improved durability
- Smooth walls for a modern and easy to maintain look
- 4 piece construction for easy handling and installation
- Innovative PIN system to lock the pieces in place and ease the installation
- Convenient storage for all bath essentials with a large top shelf, a soap dish and grab bar
- Model available without or with an integrated seat
- Textured bottom base for added safety
- Proudly made in North America

KDS 3460 - 145042

SKU	Color	Configuration	Dimensions & Weight	Packaging	MSRP
145042-000-002-093	White	Center Drain / No Seat Seat	59 5/8” x 33 1/2” x 80 1/8” / 155 lb	81.52 ft³	$ 2707
145042-000-002-094		Right Drain / Left Seat			$ 2707
145042-000-002-095		Left Drain / Right Seat			$ 2707

KDS 3460 AFR - 145043

SKU	Color	Configuration	Dimensions & Weight	Packaging	MSRP
145043-000-002-593	White	Center Drain / No Seat Seat	59 5/8” x 33 1/2” x 82 1/8” / 155 lb	81.52 ft³	$ 2707
145043-000-002-594		Right Drain / Left Seat			$ 2707
145043-000-002-595		Left Drain / Right Seat			$ 2707

COMMON OPTIONS

SKU	Description	MSRP
OPT20212-B	Back Wall reinforcement for future grab installation [33]	$ 105
OPT20212-L	Left Wall reinforcement for future grab installation [33]	$ 105
OPT20212-R	Right Wall reinforcement for future grab installation [33]	$ 105
OPT10109-084	Metallic finish grab bar replacing Acrylic grab bar Available colors: Chrome **(084)** and Brushed Nickel **(105)**	$ 345
OPT10109-105		$ 345
OPT20203-B-002	18 in. Modern straight grab bar [30] **OPT 20203-B-XXX Horizontal grab bar on back wall** Available colours: White **(002)**, Chrome **(084)** and Brushed Nickel **(105)**	$ 283
OPT20203-B-105		$ 283
OPT20203-B-084		$ 283
OPT20203-L-105	18 in. Modern straight grab bar [30] **OPT 20203-L-XXX Vertical grab bar on left wall** Available colours: White **(002)**, Chrome **(084)** and Brushed Nickel **(105)**	$ 283
OPT20203-L-002		$ 283
OPT20203-L-084		$ 283
OPT20203-R-084	18 in. Modern straight grab bar [30] **OPT 20203-R-XXX Vertical grab bar on right wall** Available colours: White **(002)**, Chrome **(084)** and Brushed Nickel **(105)**	$ 283
OPT20203-R-002		$ 283
OPT20203-R-105		$ 283
OPT20204-B-002	24 in. Modern straight grab bar [30] **OPT 20204-B-XXX Horizontal grab bar on back wall** Available colours: White **(002)**, Chrome **(084)** and Brushed Nickel **(105)**	$ 331
OPT20204-B-084		$ 331
OPT20204-B-105		$ 331
OPT20204-L-084	24 in. Modern straight grab bar [30] **OPT 20204-L-XXX Vertical grab bar on left wall** Available colours: White **(002)**, Chrome **(084)** and Brushed Nickel **(105)**	$ 331
OPT20204-L-105		$ 331
OPT20204-L-002		$ 331
OPT20204-R-002	24 in. Modern straight grab bar [30] **OPT 20204-R-XXX Vertical grab bar on right wall** Available colours: White **(002)**, Chrome **(084)** and Brushed Nickel **(105)**	$ 331

COMMON OPTIONS

SKU	Description	MSRP
OPT20204-R-084	24 in. Modern straight grab bar [30] **OPT 20204-R-XXX Vertical grab bar on right wall** Available colours: White **(002)**, Chrome **(084)** and Brushed Nickel **(105)**	$ 331
OPT20204-R-105		$ 331
145047-000-002	Shower base only with AFR with PIN system **145047-R-000-XXX Above-the-Floor Rough, Right seat, left drain** **145047-L-000-XXX Above-the-Floor Rough, Left seat, right drain** **145047-000-XXX Above-the-Floor Rough, No seat, center drain**	$ 1221
145047-L-000-002		$ 1221
145047-R-000-002		$ 1221
145057-000-002-090	Side walls (right and left) for KDS 3448 and KDS 3460	$ 772
145061-000-002-090	Back wall for KDTS 3060, KDTS 3260, KDS 3060 and KDS 3460 [28]	$ 717

FOOTNOTES

No	Description
28	Handles for standard colour units are colour-coordinated. Handles with metallic finish can be added (additional charge applies). For non-standard colour units, please specify handle colour (additional charge applies for metallic finishes).
30	Please see technical drawings on https://www.maax.com for grab bar and/or seat positioning.
33	Please see technical drawings on https://www.maax.com for reinforcement positioning and size.

RECOMMENDED DOORS - VISIT OUR WEBSITE FOR A COMPLETE LIST OF RECOMMENDED DOORS

SKU	Product Name	Pag.
138276	Manhattan 55-57 x 68 - 6mm	892
139353	Incognito 70 56-59 x 70 1/2 in. 8mm Shower door	833
139350	Incognito 70 56-59 x 70 1/2 in. 6mm Shower door	831
135694	Revelation Square 56-59 x 70 ½-73 - 8mm	852
136691	Revelation Round 56-59 x 70 1/2-73	846
135691	Revelation Square 56-59 x 70 ½-73 - 6mm	850
136694	Revelation Round 56-59 x 70 ½-73 - 8mm	848
139580	Reveal Sleek 71 56-59 x 71 1/2 - 8mm	905
136272	Duel 56-58 ½ x 70 ½ x 74 - 8 mm	829
138762	Inverto 56-59 x 70 ½-74 - 8mm	843
134675	Kameleon SC 55-59 x 71 - 8mm	820
134572	Kameleon 55-59 x 71 - 8mm	827
134665	Kameleon SC 55-59 x 71 - 6mm	814
134565	Kameleon 55-59 x 71 - 6mm	822
136672	Reveal 71 56-59 x 71 ½ - 8mm	901
105412	Polar 54-59 ½ x 68 in.	845

STANDARD

NO SEAT

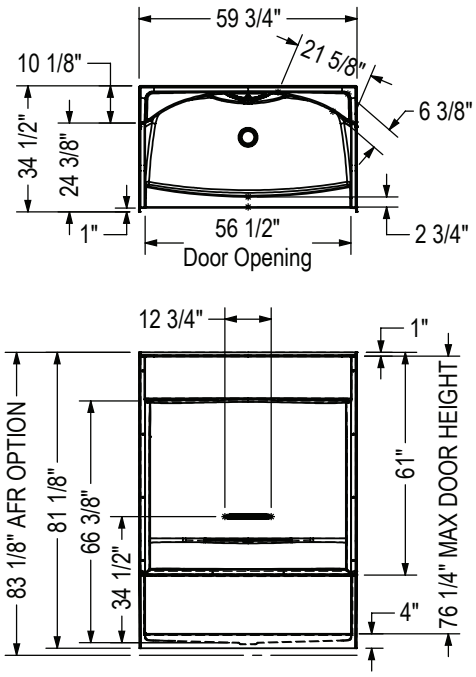

RIGHT SEAT SHOWN
LEFT SEAT SYMMETRICAL

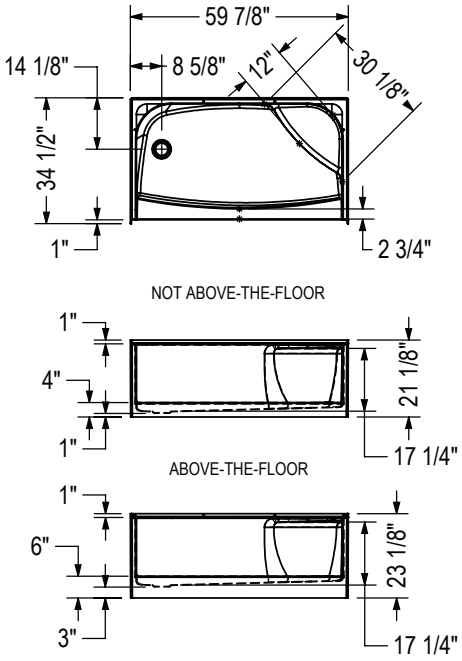

REINFORCEMENT BACKING

OPTION 20212-R RIGHT WALL SHOWN
OPTION 20212-L LEFT WALL SYMMETRICAL

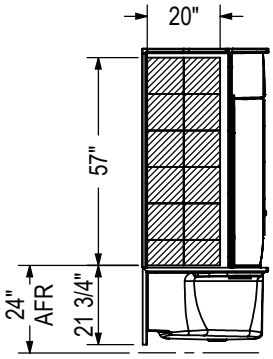

OPTION 20212-B BACK WALL

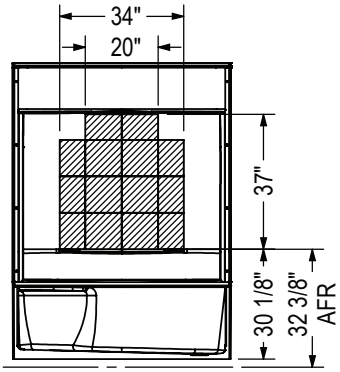

GRAB BAR

OPTION 20203

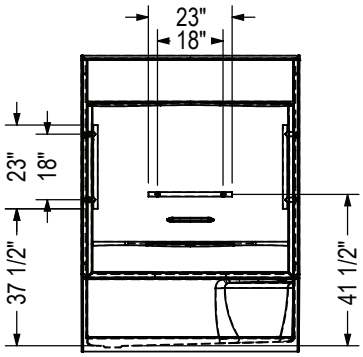

OPTION 20204

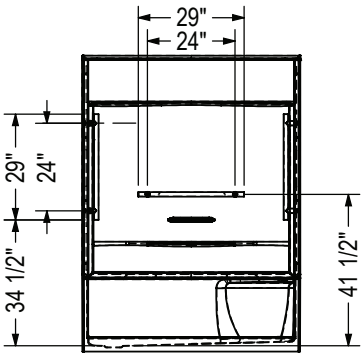

OPTION
20203-20204

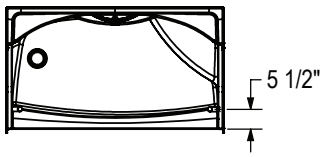

All dimensions are approximate. Structure measurements must be verified against the unit to ensure proper fit.

Go to Table of Contents

KDS 3636

Material : AcrylX

Features

- Model Size: 35.625 L in. X 36 W in. X 76 H in.
- AcrylX high gloss finish for improved durability
- Smooth walls for a modern and easy to maintain look
- 4 piece construction for easy handling and installation
- Innovative PIN system to lock the pieces in place and ease the installation
- Convenient storage for all bath essentials with a large top shelf and a grab bar
- Model with an integrated footrest
- Textured bottom base for added safety
- Proudly made in North America

KDS 3636 - 145024

SKU	Color	Configuration	Dimensions & Weight	Packaging	MSRP
145024-000-002-093	White	Center Drain / No Seat Seat	35 5/8” x 36” x 76” / 132 lb	61.53 ft^3	$ 2185

KDS 3636 AFR - 145025

SKU	Color	Configuration	Dimensions & Weight	Packaging	MSRP
145025-000-002-593	White	Center Drain / No Seat Seat	35 5/8” x 36” x 79 1/2” / 132 lb	61.53 ft^3	$ 2185

COMMON OPTIONS

SKU	Description	MSRP
OPT20204-R-002	24 in. Modern straight grab bar [30] **OPT 20204-R-XXX Vertical grab bar on right wall** Available colours: White **(002)**, Chrome **(084)** and Brushed Nickel **(105)**	$ 331
OPT20204-R-084		$ 331
OPT20204-R-105		$ 331
OPT20212-B	Back Wall reinforcement for future grab installation [33]	$ 105
OPT20212-L	Left Wall reinforcement for future grab installation [33]	$ 105
OPT20212-R	Right Wall reinforcement for future grab installation [33]	$ 105
OPT10109-084	Metallic finish grab bar replacing Acrylic grab bar Available colors: Chrome **(084)** and Brushed Nickel **(105)**	$ 345
OPT10109-105		$ 345
OPT20203-B-002	18 in. Modern straight grab bar [30] **OPT 20203-B-XXX Horizontal grab bar on back wall** Available colours: White **(002)**, Chrome **(084)** and Brushed Nickel **(105)**	$ 283
OPT20203-B-105		$ 283
OPT20203-B-084		$ 283
OPT20203-L-105	18 in. Modern straight grab bar [30] **OPT 20203-L-XXX Vertical grab bar on left wall** Available colours: White **(002)**, Chrome **(084)** and Brushed Nickel **(105)**	$ 283
OPT20203-L-002		$ 283
OPT20203-L-084		$ 283
OPT20203-R-084	18 in. Modern straight grab bar [30] **OPT 20203-R-XXX Vertical grab bar on right wall** Available colours: White **(002)**, Chrome **(084)** and Brushed Nickel **(105)**	$ 283
OPT20203-R-002		$ 283
OPT20203-R-105		$ 283
OPT20204-L-084	24 in. Modern straight grab bar [30] **OPT 20204-L-XXX Vertical grab bar on left wall** Available colours: White **(002)**, Chrome **(084)** and Brushed Nickel **(105)**	$ 331
OPT20204-L-105		$ 331
OPT20204-L-002		$ 331
145029-000-002	Shower base only with AFR and PIN system **145029-000-XXX Above-the-Floor Rough, Center drain**	$ 774
145054-000-002-090	Side walls (right and left) for KDS 3232 and KDS 3636	$ 707
145063-000-002-090	Back wall for KDS 3636 [28]	$ 707

FOOTNOTES

No	Description
28	Handles for standard colour units are colour-coordinated. Handles with metallic finish can be added (additional charge applies). For non-standard colour units, please specify handle colour (additional charge applies for metallic finishes).
30	Please see technical drawings on https://www.maax.com for grab bar and/or seat positioning.
33	Please see technical drawings on https://www.maax.com for reinforcement positioning and size.

RECOMMENDED DOORS - VISIT OUR WEBSITE FOR A COMPLETE LIST OF RECOMMENDED DOORS

SKU	Product Name	Pag.
136655	Pivolok 31-32 ¾ x 64 ½ in.	896

STANDARD

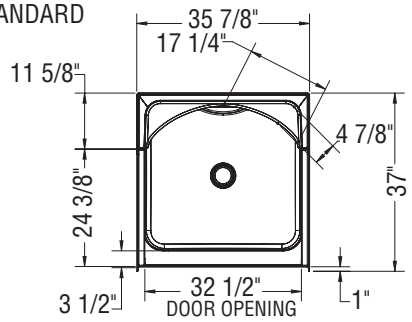

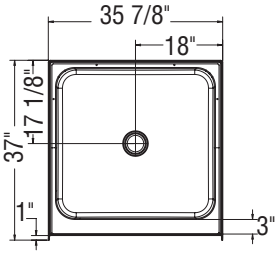

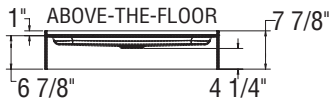

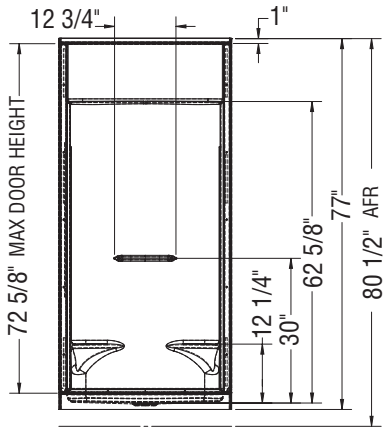

REINFORCEMENT BACKING

OPTION 20212-R RIGHT WALL SHOWN
OPTION 20212-L LEFT WALL SYMMETRICAL

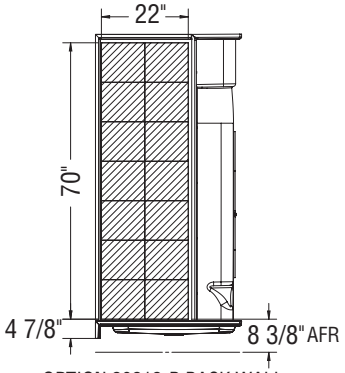

OPTION 20212-B BACK WALL

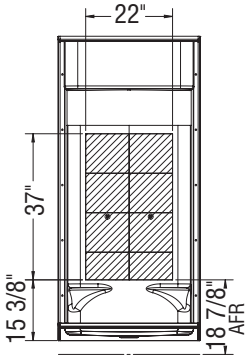

GRAB BARS

OPTION 20203

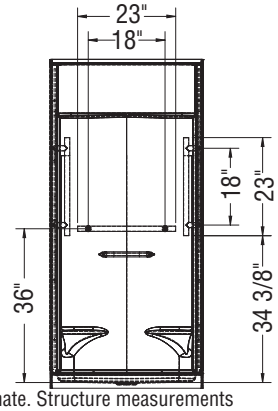

OPTION 20204

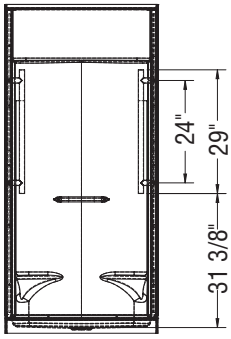

OPTION
20203-20204

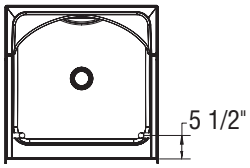

All dimensions are approximate. Structure measurements must be verified against the unit to ensure proper fit.

SS32

Material : AcrylX

Features

- 1-piece shower without roof cap
- Integrated shelf
- Center drain

SS32 - 140085

SKU	Color	Configuration	Dimensions & Weight	Packaging	MSRP
140085-000-002-000	White	Center Drain	32” x 33” x 78” / 102 lb	55 ft^3	$ 1974

RECOMMENDED DOORS - VISIT OUR WEBSITE FOR A COMPLETE LIST OF RECOMMENDED DOORS

SKU	Product Name	Pag.
138262	Manhattan 27-29 x 68 - 6mm	888
105416	Madono 28 ½-30 ½ x 67 - 6mm	886
136635	Pivolok 27-28 ¾ x 64 ½ in.	896

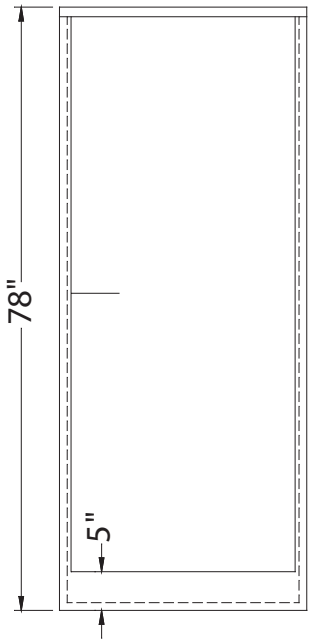

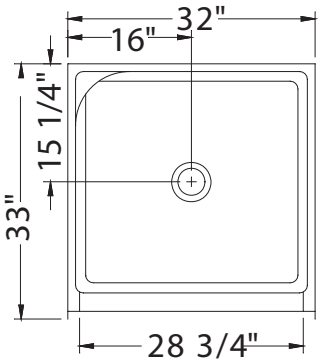

All dimensions are approximate. Structure measurements must be verified against the unit to ensure proper fit.

SS3260

Material : AcrylX

Features

- Made of AcrylX™ applied acrylic for improved durability
- Walls designed to facilitate the addition of grab bars
- Slip-resistant textured bottom for additional safety
- Built-in shelves provide generous storage space, making it easy to keep bathing essentials organized
- Full length built-in storage solution without having the need to alter the wall stud structure
- Integrated seating option on either the right or left side, ensuring optimal comfort
- One-piece construction that allows for an easy installation and maintenance
- Integrated tilling flange for an effective installation
- 3.5 in. threshold for an effortless access

SS3260 - 107106

SKU	Color	Configuration	Dimensions & Weight	Packaging	MSRP
107106-000-002-001	White	Center Drain / Left Seat	60” x 33” x 78” / 115 lb	90.59 ft^3	$ 2718
107106-000-002-002		Center Drain / Right Seat			$ 2718

COMMON OPTIONS

SKU	Description	MSRP
OPT20203-B-002	18 in. Modern straight grab bar [30] **OPT 20203-B-XXX Horizontal grab bar on back wall** Available colours: White **(002)**, Chrome **(084)** and Brushed Nickel **(105)**	$ 283
OPT20203-B-105		$ 283
OPT20203-B-084		$ 283
OPT20203-L-105	18 in. Modern straight grab bar [30] **OPT 20203-L-XXX Vertical grab bar on left wall** Available colours: White **(002)**, Chrome **(084)** and Brushed Nickel **(105)**	$ 283
OPT20203-L-002		$ 283
OPT20203-L-084		$ 283
OPT20203-R-084	18 in. Modern straight grab bar [30] **OPT 20203-R-XXX Vertical grab bar on right wall** Available colours: White **(002)**, Chrome **(084)** and Brushed Nickel **(105)**	$ 283
OPT20203-R-002		$ 283
OPT20203-R-105		$ 283
OPT20204-B-002	24 in. Modern straight grab bar [30] **OPT 20204-B-XXX Horizontal grab bar on back wall** Available colours: White **(002)**, Chrome **(084)** and Brushed Nickel **(105)**	$ 331
OPT20204-B-084		$ 331
OPT20204-B-105		$ 331
OPT20204-L-084	24 in. Modern straight grab bar [30] **OPT 20204-L-XXX Vertical grab bar on left wall** Available colours: White **(002)**, Chrome **(084)** and Brushed Nickel **(105)**	$ 331
OPT20204-L-105		$ 331
OPT20204-L-002		$ 331
OPT20204-R-002	24 in. Modern straight grab bar [30] **OPT 20204-R-XXX Vertical grab bar on right wall** Available colours: White **(002)**, Chrome **(084)** and Brushed Nickel **(105)**	$ 331
OPT20204-R-084		$ 331
OPT20204-R-105		$ 331
OPT20212-B	Back Wall reinforcement for future grab installation [33]	$ 105
OPT20212-L	Left Wall reinforcement for future grab installation [33]	$ 105
OPT20212-R	Right Wall reinforcement for future grab installation [33]	$ 105

FOOTNOTES

No	Description
30	Please see technical drawings on https://www.maax.com for grab bar and/or seat positioning.
33	Please see technical drawings on https://www.maax.com for reinforcement positioning and size.

Go to Table of Contents

BASE MODEL

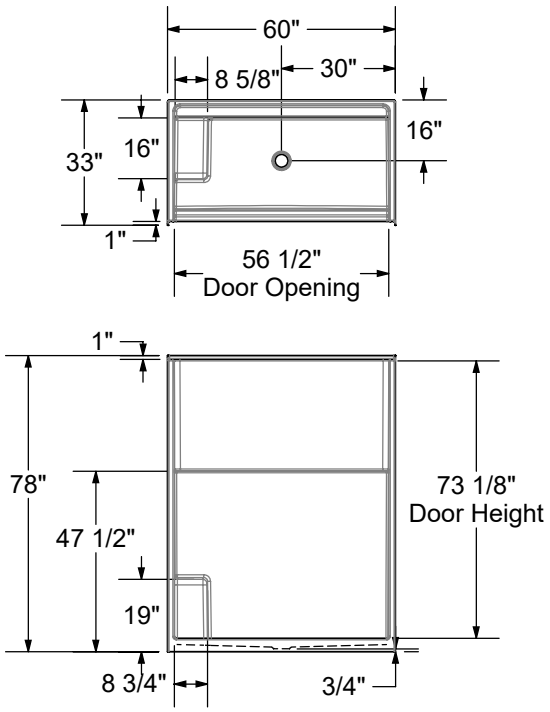

OPT - REINFORCEMENT

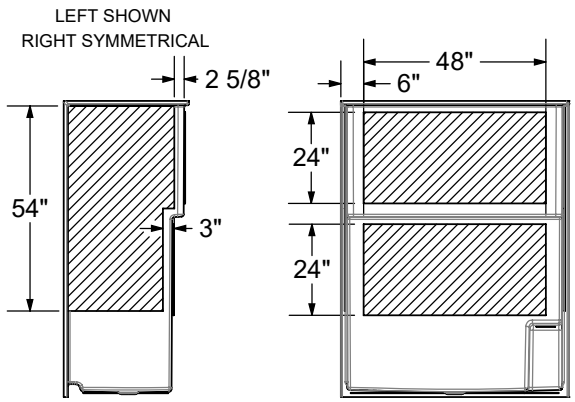

THRESHOLD DETAIL

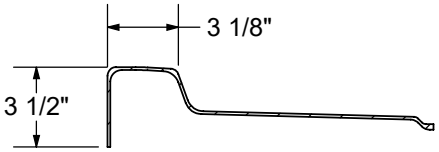

OPT - GRAB BAR

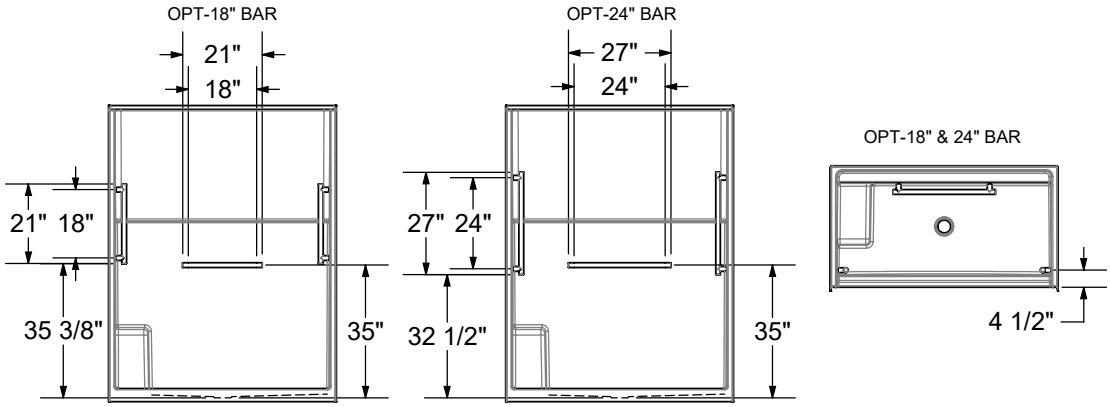

- All dimensions are approximate. Structure measurements must be verified against the unit to ensure proper fit
- Installation to be completed in accordance with manufacturers specifications
- Do not scale drawings

Go to Table of Contents

SS3648 R/L

Material : AcrylX

Features

- 1-piece shower without roof cap
- Integrated seat (specify left or right) and shelves
- Center drain

SS3648 R/L - 140087

SKU	Color	Configuration	Dimensions & Weight	Packaging	MSRP
140087-000-002-001	White	Center Drain / Left Seat	48” x 36” x 75” / 115 lb	86 ft^3	$ 2567
140087-000-002-002		Center Drain / Right Seat			$ 2567

RECOMMENDED DOORS - VISIT OUR WEBSITE FOR A COMPLETE LIST OF RECOMMENDED DOORS

SKU	Product Name	Pag.
138269	Manhattan 41-43 x 68 - 6mm	891
105413	Polar 42-47 ½ x 68 in.	845

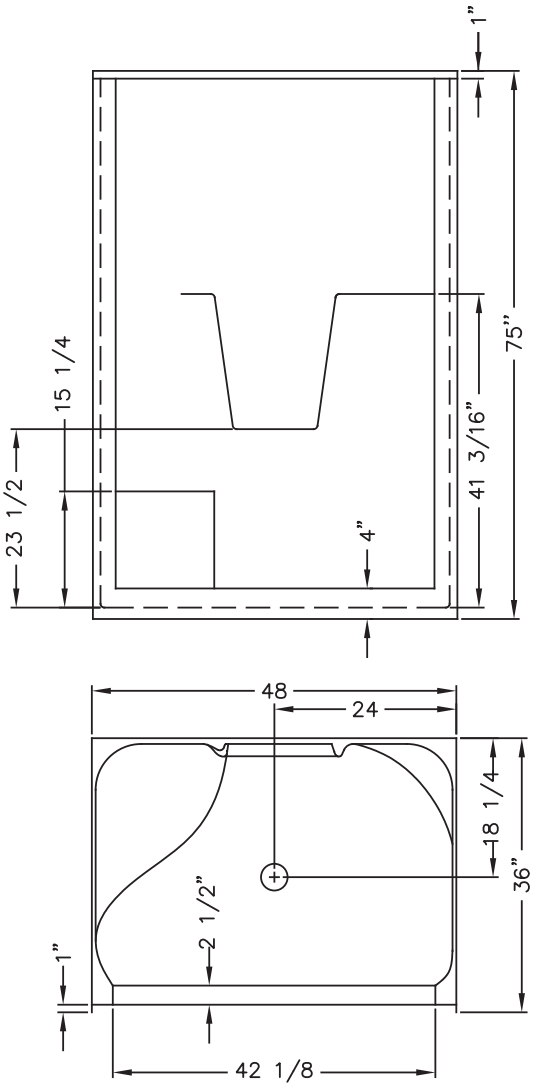

All dimensions are approximate. Structure measurements.
must be verified against the unit to ensure proper fit.

Go to Table of Contents

SS3660

Material : AcrylX

Features

- Phasing out in 2025 - Replaced by new Icon Shower
- 1-piece shower without roof cap
- Integrated shelves and seats
- Center drain

SS3660 - 140088

SKU	Color	Configuration	Dimensions & Weight	Packaging	MSRP
140088-000-002-000	White	Center Drain / Left and Right Seat	60” x 36” x 75” / 130 lb	105 ft^3	$ 2591

RECOMMENDED DOORS - VISIT OUR WEBSITE FOR A COMPLETE LIST OF RECOMMENDED DOORS

SKU	Product Name	Pag.
138275	Manhattan 53-55 x 68 - 6mm	892
105412	Polar 54-59 ½ x 68 in.	845

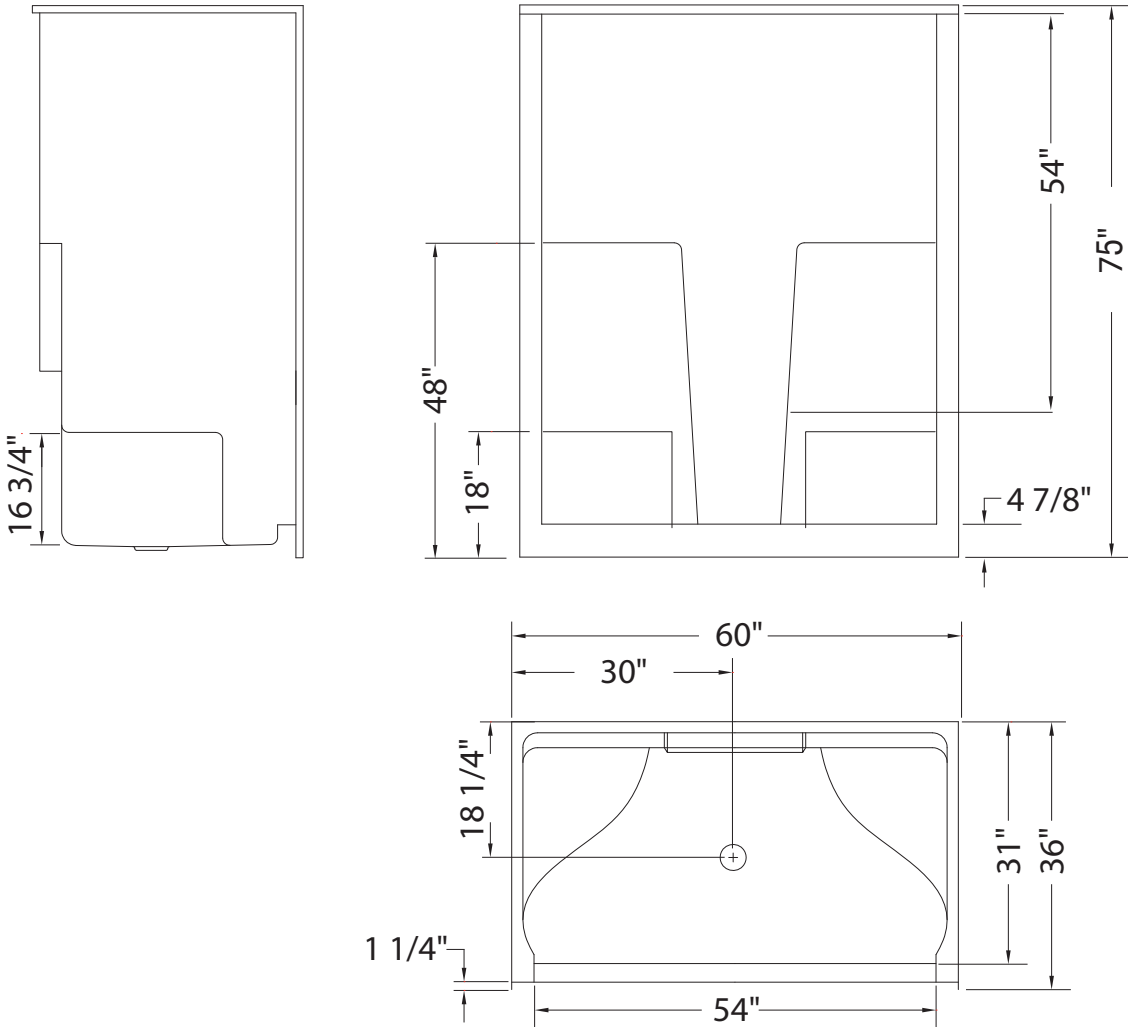

All dimensions are approximate. Structure measurements must be verified against the unit to ensure proper fit.

Go to Table of Contents

SS3660 R/L

Material : AcrylX

Features

- Phasing out in 2025 - Replaced by new Icon Shower
- 1-piece shower without roof cap
- Integrated shelves and seat
- Center drain

SS3660 R/L - 102676

SKU	Color	Configuration	Dimensions & Weight	Packaging	MSRP
102676-000-002-001	White	Center Drain / Left Seat	60” x 36” x 77 3/8” / 130 lb	105 ft^3	$ 2720
102676-000-002-002		Center Drain / Right Seat			$ 2720

RECOMMENDED DOORS - VISIT OUR WEBSITE FOR A COMPLETE LIST OF RECOMMENDED DOORS

SKU	Product Name	Pag.
138275	Manhattan 53-55 x 68 - 6mm	892
134564	Kameleon 51-55 x 71 - 6mm	825
134664	Kameleon SC 51-55 x 71 - 6mm	816
105412	Polar 54-59 ½ x 68 in.	845

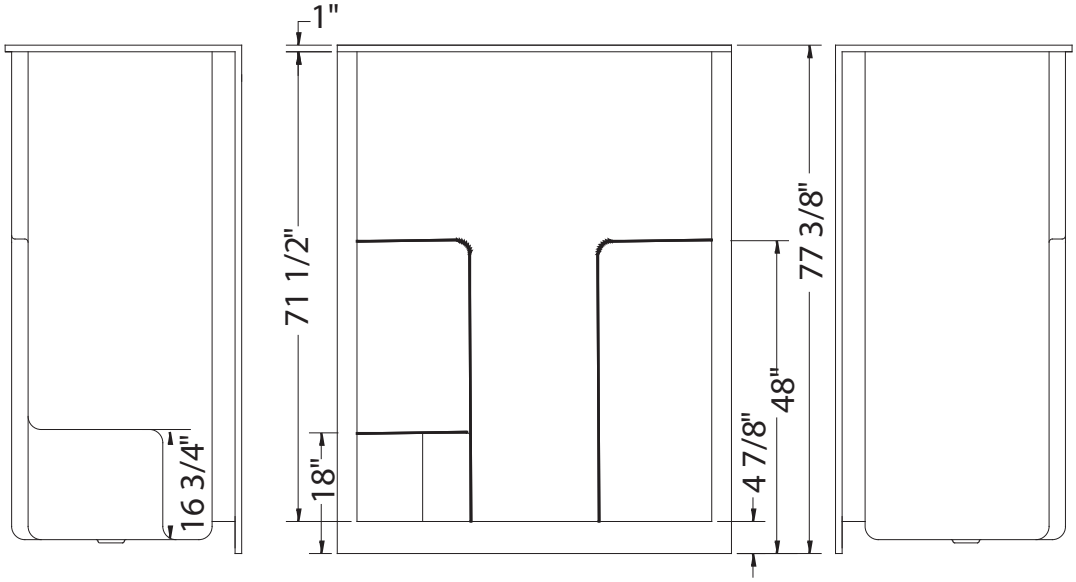

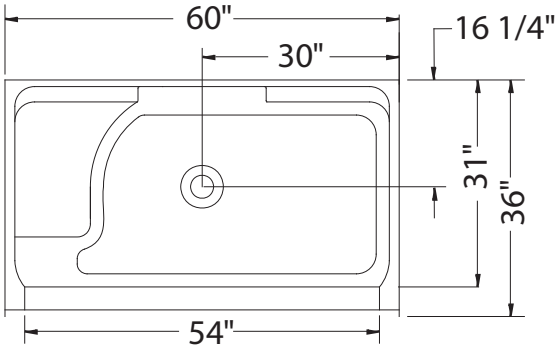

All dimensions are approximate. Structure measurements must be verified against the unit to ensure proper fit.

SST3648

Material : AcrylX

Features

- 1-piece shower without roof cap
- Integrated seats and shelves
- Unique feature: tile pattern finish
- Center drain

SST3648 - 140546

SKU	Color	Configuration	Dimensions & Weight	Packaging	MSRP
140546-000-002-011	White	Center Drain / Left and Right Seat	48” x 36” x 75” / 133 lb	101 ft^3	$ 1689

RECOMMENDED DOORS - VISIT OUR WEBSITE FOR A COMPLETE LIST OF RECOMMENDED DOORS

SKU	Product Name	Pag.
138270	Manhattan 43-45 x 68	892
138950	Halo Pro 44 ½-47 x 78 ¾ - 8mm	866
135334	Incognito 76 44-47 x 76 in. 8mm Shower Door	839
139352	Incognito 70 44-47 x 70 1/2 in. 8mm Shower Door	833
139349	Incognito 70 44-47 x 70 1/2 in. 6mm Shower Door	831
138460	Vela 44 ½-47 x 78 ¾ - 8mm	858
136693	Revelation Round 44-47 x 70 ½-73 - 8mm	848
135690	Revelation Square 44-47 x 70 ½-73 - 6mm	850
134563	Kameleon 43-47 x 71 - 6mm	822
135323	Uptown 44-47 x 76 in. 8 mm	876
139578	Reveal Sleek 71 44-47 x 71 1/2 - 8mm	904
134571	Kameleon 43-47 x 71 - 8mm	827
135870	Nebula 44 ½-46 ½ x 78 ¾ - 8mm	856
138954	Halo Pro TB 44 ½-47 x 78 ¾ - 8mm	868
135331	Incognito 76 Shaker 44-47 x 76 in. 8mm Shower Door	837
135321	Uptown 44-47 x 76 in. 8 mm	854
136271	Duel 44-47 x 70 1/2-74	829
136956	Duel Alto 44-47 X 78 - 8 mm	812
138761	Inverto 43-47 x 70 ½-74 - 8mm	843
139586	Capella 78 44-47 x 78 - 8mm	878
135235	Connect Pro 43 ½-45 x 76 - 6mm	862
138465	Vela 44 ½-47 x 78 ¾ - 8mm	860
134674	Kameleon SC 43-47 x 71 - 8mm	820
135693	Revelation Square 44-47 x 70 ½-73 - 8mm	852
138996	Halo 44 ½-47 x 78 ¾ - 8mm	870
138992	Luminescence 44 ½-47 x 70 ½-72 - 6mm	872
136671	Reveal 71 44-47 x 71 ½ - 8mm	901
105413	Polar 42-47 ½ x 68 in.	845
136690	Revelation Round 44-47 x 70 1/2-73	846
138540	Halo Pro GS 44 1/2-47 X 78 3/4 - 8mm	864
134663	Kameleon SC 43-47 x 71 - 6mm	818

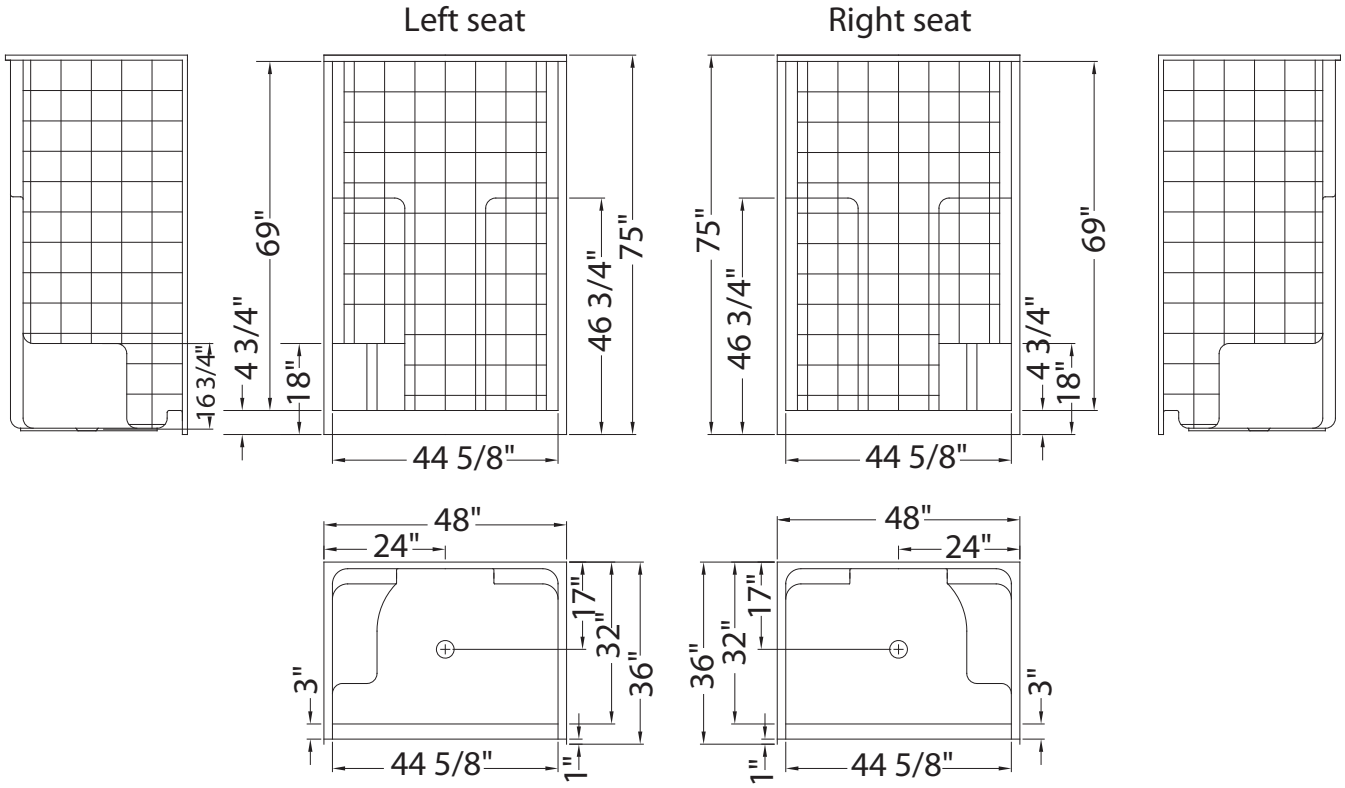

All dimensions are approximate. Structure measurements must be verified against the unit to ensure proper fit.

SST3660

Material : AcrylX

Features

- 1-piece shower without roof cap
- Integrated shelves and seats
- Unique feature: tile pattern finish

SST3660 - 140093

SKU	Color	Configuration	Dimensions & Weight	Packaging	MSRP
140093-000-002-000	White	Center Drain / Left and Right Seat	60” x 36” x 72” / 133 lb	101 ft^3	$ 2591

COMMON OPTIONS

SKU	Description	MSRP
OPT20212-B	Back Wall reinforcement for future grab installation [33]	$ 105
OPT20212-L	Left Wall reinforcement for future grab installation [33]	$ 105
OPT20212-R	Right Wall reinforcement for future grab installation [33]	$ 105

FOOTNOTES

No	Description
33	Please see technical drawings on https://www.maax.com for reinforcement positioning and size.

RECOMMENDED DOORS - VISIT OUR WEBSITE FOR A COMPLETE LIST OF RECOMMENDED DOORS

SKU	Product Name	Pag.
138277	Manhattan 57-59 x 68	893
138997	Halo 56 ½-59 x 78 ¾ - 8mm	870
139353	Incognito 70 56-59 x 70 1/2 in. 8mm Shower door	833
139350	Incognito 70 56-59 x 70 1/2 in. 6mm Shower door	831
135332	Incognito 76 Shaker 56-59 x 76 in. 8mm Shower Door	837
135335	Incognito 76 56-59 x 76 in. 8mm Shower Door	839
136335	Incognito 76 Smoke 56-59 x 76 - 8mm	841
135694	Revelation Square 56-59 x 70 ½-73 - 8mm	852
136691	Revelation Round 56-59 x 70 1/2-73	846
135691	Revelation Square 56-59 x 70 ½-73 - 6mm	850
136694	Revelation Round 56-59 x 70 ½-73 - 8mm	848
135322	Uptown 56-59 x 76 in. 8 mm	854
135324		876
135326	Uptown 57-59 x 76 in. 8 mm	907
135238	Connect Pro 57-58 ½ x 76 - 6mm	862
139580	Reveal Sleek 71 56-59 x 71 1/2 - 8mm	905
138956	Halo Pro TB 56 ½-59 x 78 ¾ - 8mm	868
138952	Halo Pro 56 ½-59 x 78 ¾ - 8mm	866
138541	Halo Pro GS 56 1/2-59 X 78 3/4 - 8mm	864
136955	Duel Alto 56-59 X 78 - 8 mm	812
136272	Duel 56-58 ½ x 70 ½ x 74 - 8 mm	829
138762	Inverto 56-59 x 70 ½-74 - 8mm	843

Full Wall Reinforcement Shown

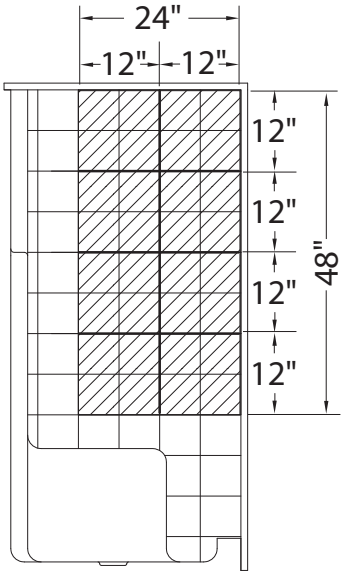

SIDE WALL Reinforcement

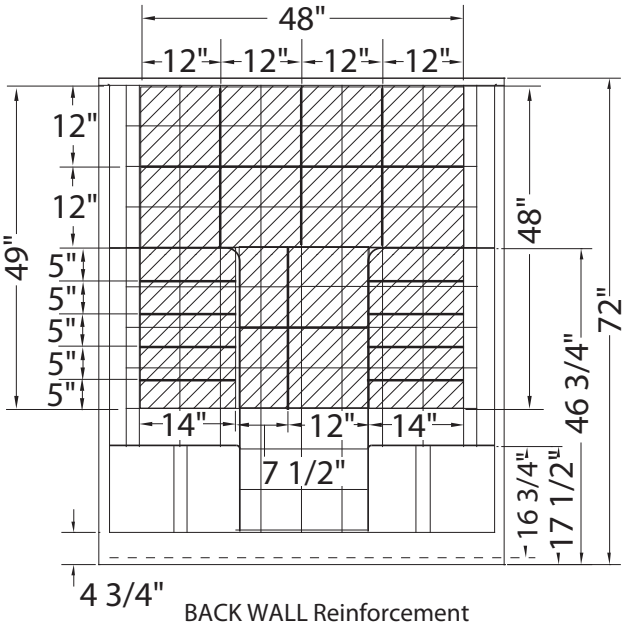

BACK WALL Reinforcement

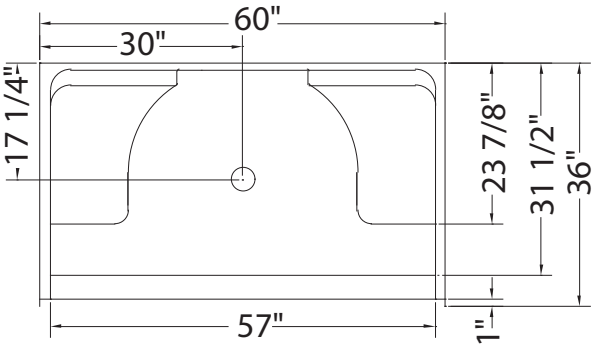

All dimensions are approximate. Structure measurements must be verified against the unit to ensure proper fit.

Freestyle 37 Neo-angle (1-Piece)

Material : Acrylic

Features

- One piece design for a quick installation; perfect for new construction
- Built-in shelves provide generous storage space, making it easy to keep bathing essentials organized
- Neo-angle shower for a corner installation
- Acrylic surface resistant to stains
- Hygienic, non-porous surface for easy cleaning
- Optional roof cap: enhances versatility, provides added protection, and improves aesthetics
- Functional and versatile design to fit any bathroom style
- DIY Install
- Proudly made in North America

FREESTYLE 37 NEO-ANGLE (1-PIECE) - 102994

SKU	Color	Configuration	Dimensions & Weight	Packaging	MSRP
102994-000-001-101	White	Corner Drain / Corner Seat	36 1/2” x 36 1/2” x 77 1/2” / 98 lb	74.76 ft³	$ 2235
102994-000-001-102		Corner Drain / No Seat Seat			$ 2235

FREESTYLE 37 NEO-ANGLE (2-PIECE) - 102994S

SKU	Color	Configuration	Dimensions & Weight	Packaging	MSRP
102994-000-001-100	White	Corner Drain / Corner Seat	36 1/2” x 36 1/2” x 77 3/4” / 100 lb	74.76 ft³	$ 2460
102994-S-000-001-		Corner Drain / No Seat Seat			$ 2460

COMMON OPTIONS

SKU	Description	MSRP
105103-000-001-000	Roof cap Available in White only **(001)**	$ 866
OPT20348-340	Integrated Shelves Guard Rails for Freestyle Showers Available colors: Chrome **(084)**, Brushed Nickel **(105)** and Matte Black **(340)** Click here for image	$ 0
OPT20348-084		$ 0
OPT20348-105		$ 0

ACCESSORIES

SKU	Description	MSRP
10000041-105	**Shower Drain (sold separately)** **PVC quick caulking shower drain, compression type** **Specify grid color: Chrome (084) or Brushed Nickel (105)**	$ 59
10000041-084		$ 59
10000043-084	**Shower Drain (sold separately)** **2-piece ABS shower drain with Chrome stainless steel grid**	$ 54
10033258	Single shower light 120V (sold separately)	$ 491
10004349-001	ABS shower drain with ABS grid (sold separately) Available color: White **(001)** and Bone **(004)**	$ 21
10004349-004		$ 21

RECOMMENDED DOORS - VISIT OUR WEBSITE FOR A COMPLETE LIST OF RECOMMENDED DOORS

SKU	Product Name	Pag.
137440	Radia Neo-angle 36 x 36 x 71 ½ - 6mm	951
137904	Silhouette Neo-angle Pivot 36 x 36 x 70 in.	973

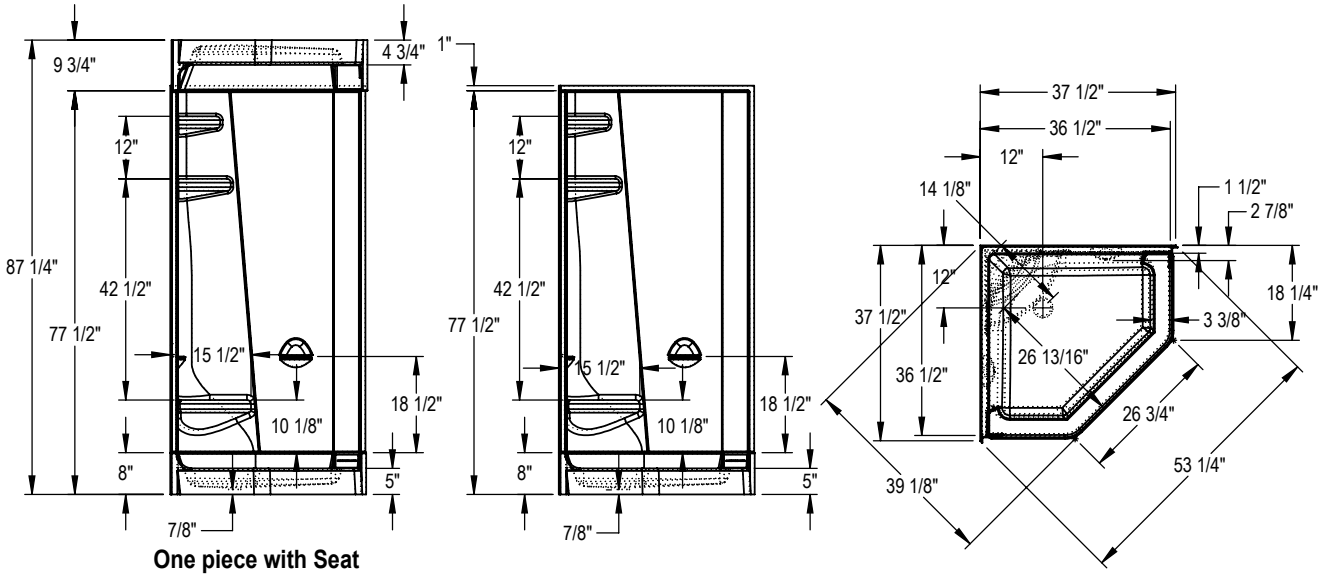

One piece with Seat

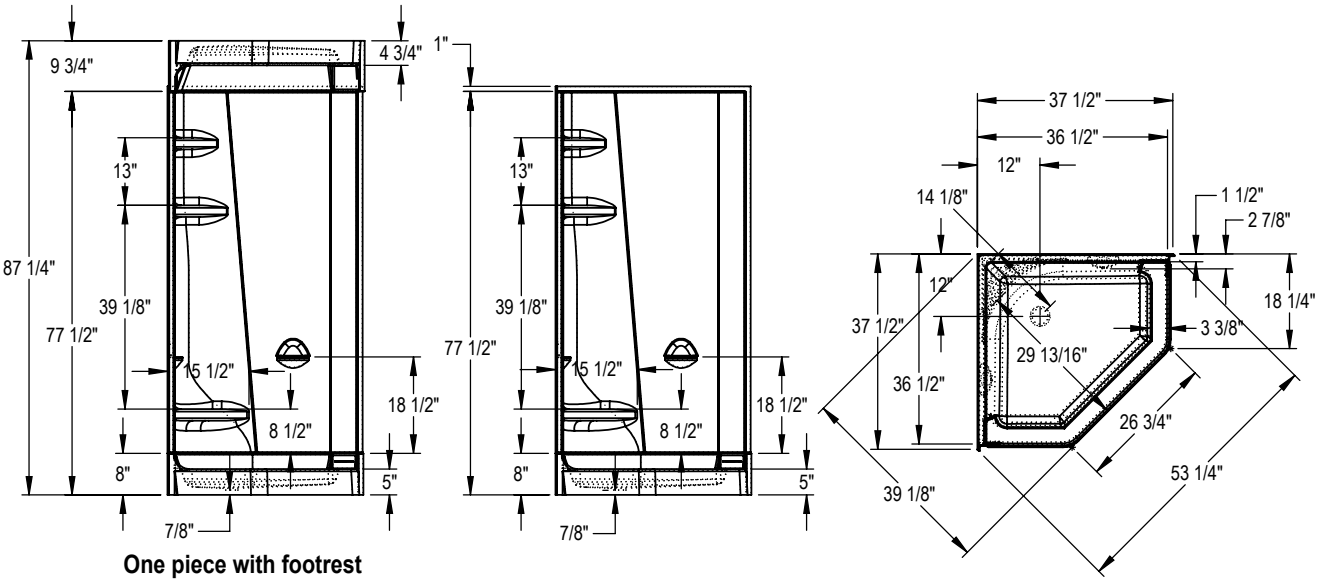

One piece with footrest

All dimensions are approximate. Structure measurements must be verified against the unit to ensure proper fit.

Freestyle 37 Neo-round (1-piece)

Material : Acrylic

Features

- One piece design for a quick installation; perfect for new construction
- Built-in shelves provide generous storage space, making it easy to keep bathing essentials organized
- Neo-round shower for a corner installation
- Acrylic surface resistant to stains
- Hygienic, non-porous surface for easy cleaning
- Optional roof cap: enhances versatility, provides added protection, and improves aesthetics
- Functional and versatile design to fit any bathroom style
- DIY Install
- Proudly made in North America

FREESTYLE 37 NEO-ROUND (1-PIECE) - 102995

SKU	Color	Configuration	Dimensions & Weight	Packaging	MSRP
102995-000-001-103	White	Corner Drain / Corner Seat	36 1/2” x 36 1/2” x 77 1/2” / 96 lb	74.76 ft³	$ 2235
102995-000-001-106		Corner Drain / No Seat Seat			$ 2235

FREESTYLE 37 NEO-ROUND (2-PIECE) - 102995S

SKU	Color	Configuration	Dimensions & Weight	Packaging	MSRP
102995-000-001-102	White	Corner Drain / Corner Seat	36 1/2” x 36 1/2” x 77 3/4” / 98 lb	74.76 ft³	$ 2461
102995-000-001-107		Corner Drain / No Seat Seat			$ 2461

COMMON OPTIONS

SKU	Description	MSRP
105104-000-001-000	Roof cap Available in White only **(001)**	$ 866
OPT20348-340	Integrated Shelves Guard Rails for Freestyle Showers Available colors: Chrome **(084)**, Brushed Nickel **(105)** and Matte Black **(340)** Click here for image	$ 0
OPT20348-084		$ 0
OPT20348-105		$ 0

ACCESSORIES

SKU	Description	MSRP
10000041-105	**Shower Drain (sold separately)** **PVC quick caulking shower drain, compression type** **Specify grid color: Chrome (084) or Brushed Nickel (105)**	$ 59
10000041-084		$ 59
10000043-084	**Shower Drain (sold separately)** **2-piece ABS shower drain with Chrome stainless steel grid**	$ 54
10033258	Single shower light 120V (sold separately)	$ 491
10004349-001	ABS shower drain with ABS grid (sold separately) Available color: White **(001)** and Bone **(004)**	$ 21
10004349-004		$ 21

RECOMMENDED DOORS - VISIT OUR WEBSITE FOR A COMPLETE LIST OF RECOMMENDED DOORS

SKU	Product Name	Pag.
137444	Radia Neo-round 36 x 36 x 71 ½ - 6mm	953

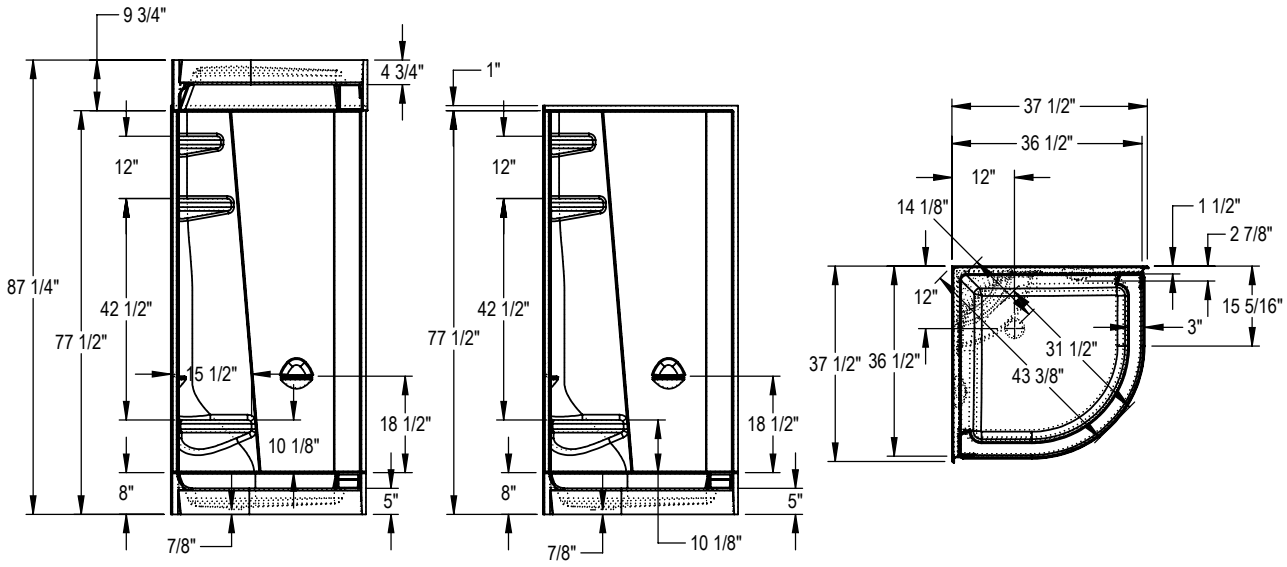

One piece with Seat

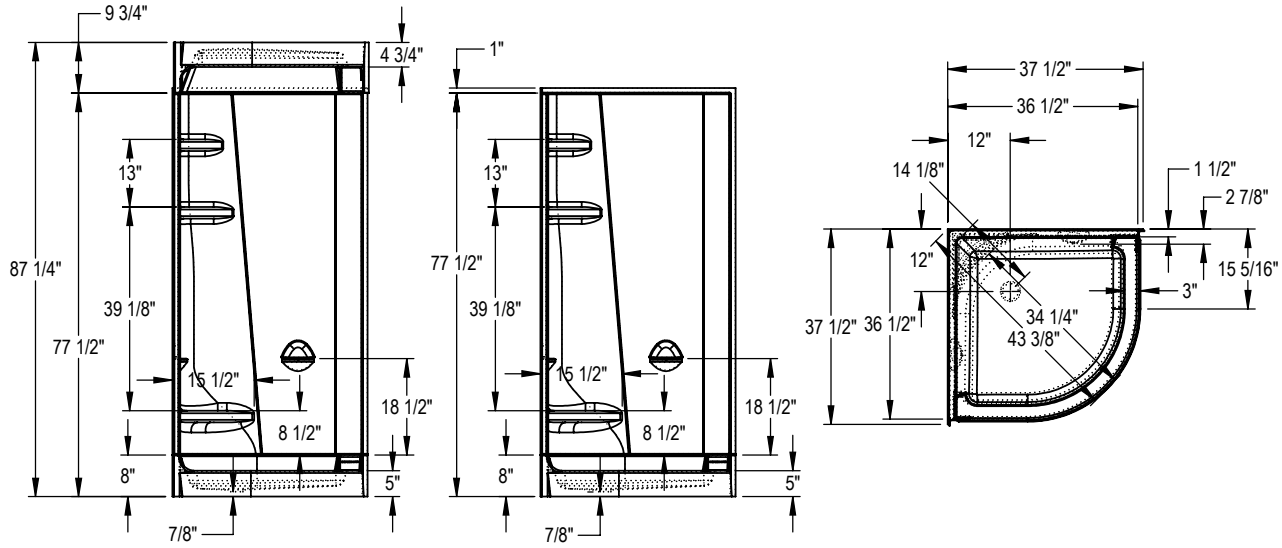

One piece with footrest

All dimensions are approximate. Structure measurements must be verified against the unit to ensure proper fit.

Freestyle 37 Round (1-piece)

Material : Acrylic

Features

- One piece design for a quick installation; perfect for new construction
- Built-in shelves provide generous storage space, making it easy to keep bathing essentials organized
- Round shower for a corner installation
- Acrylic surface resistant to stains
- Hygienic, non-porous surface for easy cleaning
- Optional roof cap: enhances versatility, provides added protection, and improves aesthetics
- Functional and versatile design to fit any bathroom style
- DIY Install
- Proudly made in North America

FREESTYLE 37 ROUND (1-PIECE) - 102996

SKU	Color	Configuration	Dimensions & Weight	Packaging	MSRP
102996-000-001-102	White	Corner Drain / Corner Seat	36 1/2” x 36 1/2” x 77 1/2” / 103 lb	74.76 ft^3	$ 2595
102996-000-001-104		Corner Drain / No Seat Seat			$ 2595

FREESTYLE 37 ROUND (2-PIECE) - 102996S

SKU	Color	Configuration	Dimensions & Weight	Packaging	MSRP
102996-000-001-103	White	Corner Drain / Corner Seat	36 1/2” x 36 1/2” x 77 3/4” / 103 lb	74.76 ft^3	$ 2818
102996-000-001-105		Corner Drain / No Seat Seat			$ 2818

COMMON OPTIONS

SKU	Description	MSRP
105105-000-001-000	Roof cap Available in White only **(001)**	$ 866
OPT20348-340	Integrated Shelves Guard Rails for Freestyle Showers Available colors: Chrome **(084)**, Brushed Nickel **(105)** and Matte Black **(340)** Click here for image	$ 0
OPT20348-084		$ 0
OPT20348-105		$ 0

ACCESSORIES

SKU	Description	MSRP
10000041-105	**Shower Drain (sold separately)** **PVC quick caulking shower drain, compression type** **Specify grid color: Chrome (084) or Brushed Nickel (105)**	$ 59
10000041-084		$ 59
10000043-084	**Shower Drain (sold separately)** **2-piece ABS shower drain with Chrome stainless steel grid**	$ 54
10033258	Single shower light 120V (sold separately)	$ 491
10004349-001	ABS shower drain with ABS grid (sold separately) Available color: White **(001)** and Bone **(004)**	$ 21
10004349-004		$ 21

RECOMMENDED DOORS - VISIT OUR WEBSITE FOR A COMPLETE LIST OF RECOMMENDED DOORS

SKU	Product Name	Pag.
137446	Radia Round 36 x 36 x 71 ½ - 6mm	955

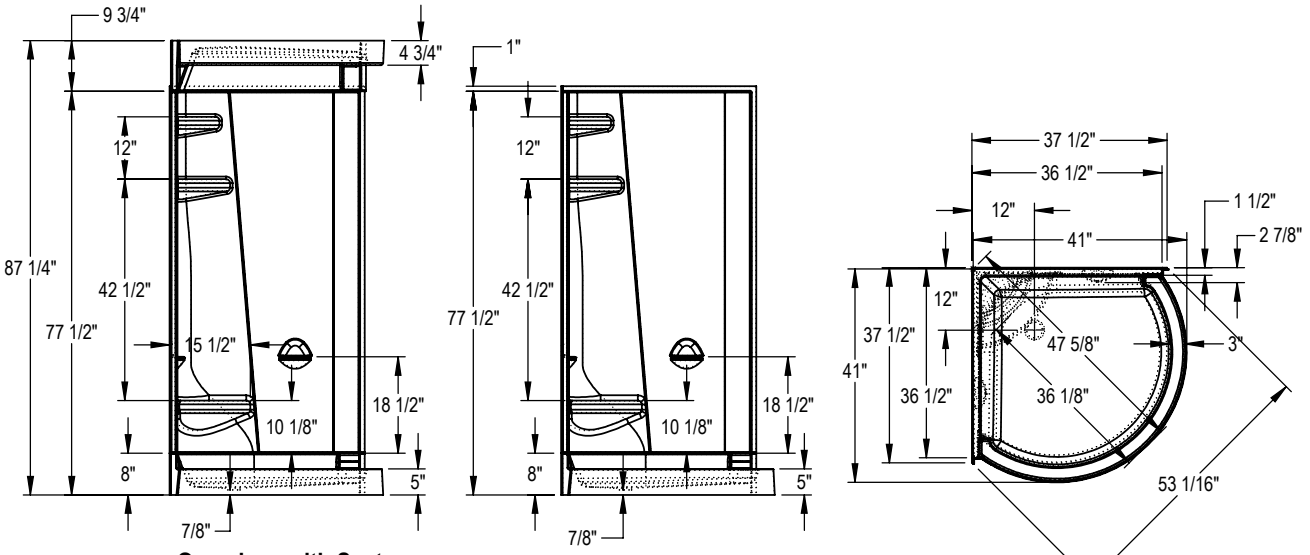

One piece with Seat

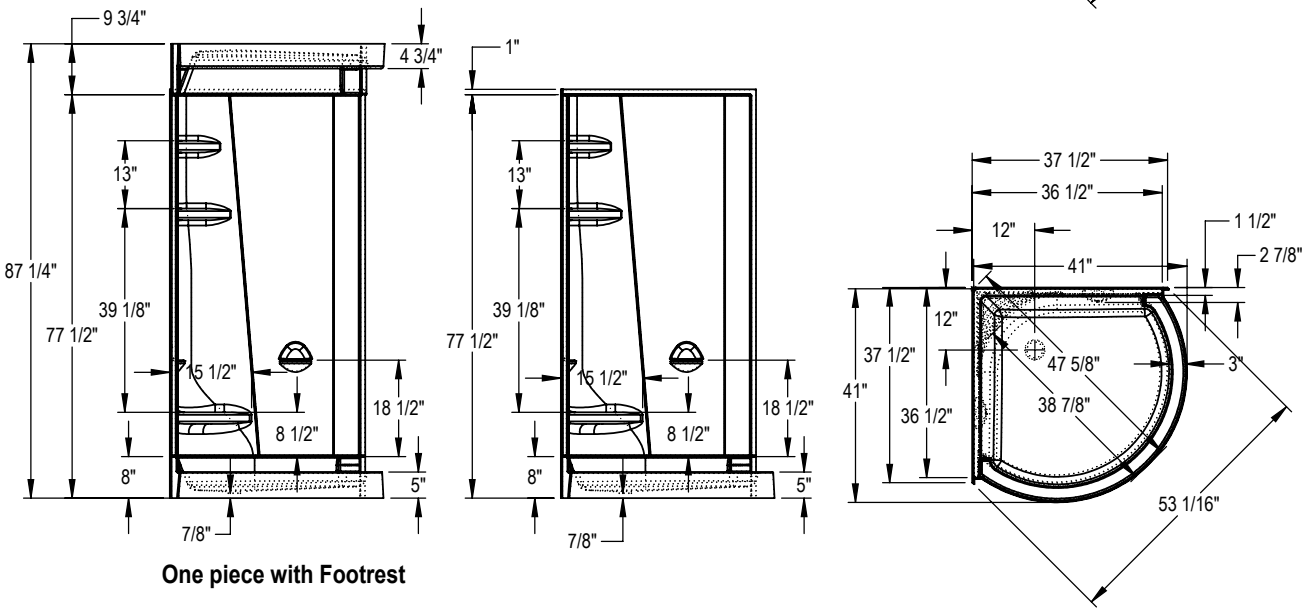

One piece with Footrest

All dimensions are approximate. Structure measurements must be verified against the unit to ensure proper fit.

Freestyle 40 Neo-angle (1-piece)

Material : Acrylic

Features

- One piece design for a quick installation; perfect for new construction
- Built-in shelves provide generous storage space, making it easy to keep bathing essentials organized
- Neo-angle shower for a corner installation
- Acrylic surface resistant to stains
- Hygienic, non-porous surface for easy cleaning
- Optional roof cap: enhances versatility, provides added protection, and improves aesthetics
- Functional and versatile design to fit any bathroom style
- DIY Install
- Proudly made in North America

FREESTYLE 40 NEO-ANGLE (1-PIECE) - 102997

SKU	Color	Configuration	Dimensions & Weight	Packaging	MSRP
102997-000-001-100	White	Corner Drain / No Seat Seat	39 1/2” x 39 1/2” x 77 1/2” / 107 lb	74.76 ft³	$ 2584
102997-C-000-001		Corner Drain / Corner Seat			$ 2584

FREESTYLE 40 NEO-ANGLE (2-PIECE) - 102997S

SKU	Color	Configuration	Dimensions & Weight	Packaging	MSRP
102997-S-000-001-	White	Corner Drain / No Seat Seat	39 1/2” x 39 1/2” x 77 3/4” / 109 lb	74.76 ft³	$ 2818
102997-SC-000-001		Corner Drain / Corner Seat			$ 2818

COMMON OPTIONS

SKU	Description	MSRP
105106-000-001-000	Roof cap Available in White only **(001)**	$ 911
OPT20348-340	Integrated Shelves Guard Rails for Freestyle Showers Available colors: Chrome **(084)**, Brushed Nickel **(105)** and Matte Black **(340)** Click here for image	$ 0
OPT20348-084		$ 0
OPT20348-105		$ 0

ACCESSORIES

SKU	Description	MSRP
10000041-105	**Shower Drain (sold separately)** **PVC quick caulking shower drain, compression type** **Specify grid color: Chrome (084) or Brushed Nickel (105)**	$ 59
10000041-084		$ 59
10000043-084	**Shower Drain (sold separately)** **2-piece ABS shower drain with Chrome stainless steel grid**	$ 54
10033258	Single shower light 120V (sold separately)	$ 491
10004349-001	ABS shower drain with ABS grid (sold separately) Available color: White **(001)** and Bone **(004)**	$ 21
10004349-004		$ 21

RECOMMENDED DOORS - VISIT OUR WEBSITE FOR A COMPLETE LIST OF RECOMMENDED DOORS

SKU	Product Name	Pag.
137442	Radia Neo-angle 40 x 40 x 71 ½ - 6mm	951

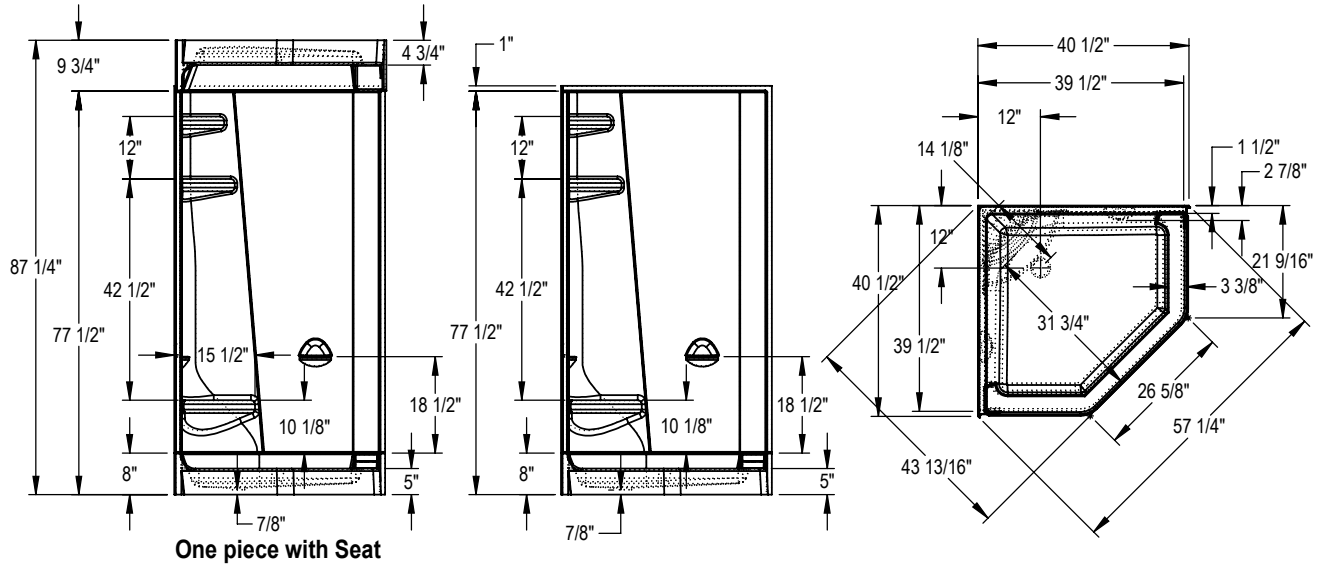

One piece with Seat

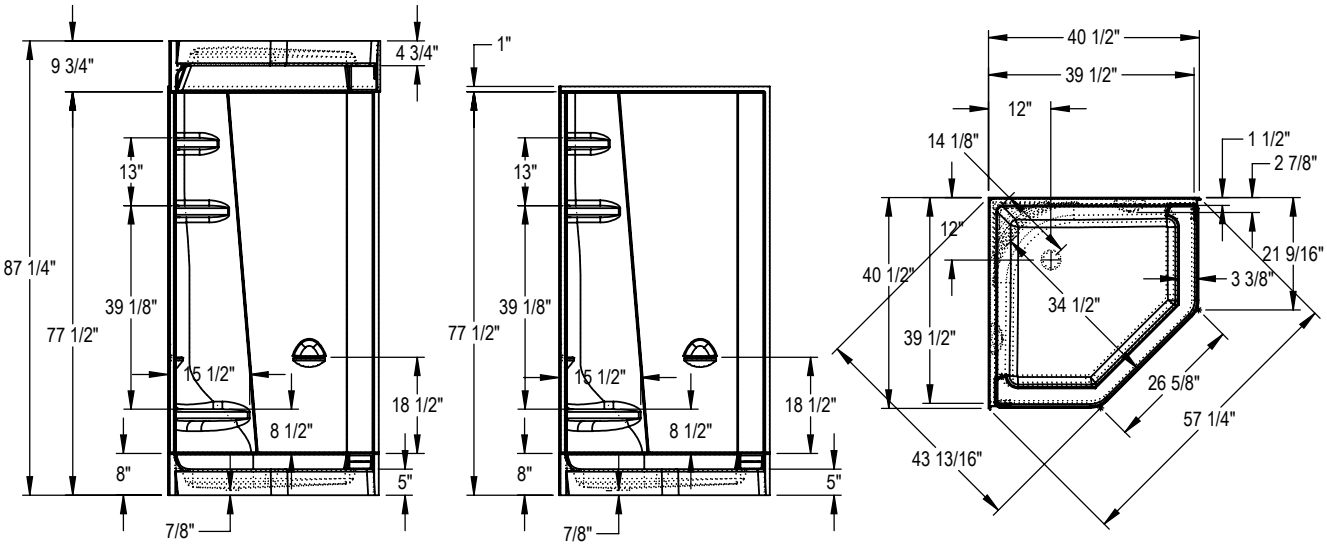

One piece with footrest

All dimensions are approximate. Structure measurements must be verified against the unit to ensure proper fit.

Freestyle 40 Neo-round (1-piece)

Material : Acrylic

Features

- One piece design for a quick installation; perfect for new construction
- Built-in shelves provide generous storage space, making it easy to keep bathing essentials organized
- Neo-round shower for a corner installation
- Acrylic surface resistant to stains
- Hygienic, non-porous surface for easy cleaning
- Optional roof cap: enhances versatility, provides added protection, and improves aesthetics
- Functional and versatile design to fit any bathroom style
- DIY Install
- Proudly made in North America

FREESTYLE 40 NEO-ROUND (1-PIECE) - 102998

SKU	Color	Configuration	Dimensions & Weight	Packaging	MSRP
102998-000-001-100	White	Corner Drain / Corner Seat	39 1/2” x 39 1/2” x 77 1/2” / 107 lb	74.76 ft³	$ 2595
102998-000-001-103		Corner Drain / No Seat Seat			$ 2595

FREESTYLE 40 NEO-ROUND (2-PIECE) - 102998S

SKU	Color	Configuration	Dimensions & Weight	Packaging	MSRP
102998-000-001-101	White	Corner Drain / Corner Seat	39 1/2” x 39 1/2” x 77 3/4” / 107 lb	74.76 ft³	$ 2819
102998-000-001-102		Corner Drain / No Seat Seat			$ 2819

COMMON OPTIONS

SKU	Description	MSRP
105107-000-001-000	Roof cap Available in White only **(001)**	$ 911
OPT20348-340	Integrated Shelves Guard Rails for Freestyle Showers Available colors: Chrome **(084)**, Brushed Nickel **(105)** and Matte Black **(340)** Click here for image	$ 0
OPT20348-084		$ 0
OPT20348-105		$ 0

ACCESSORIES

SKU	Description	MSRP
10000041-105	**Shower Drain (sold separately)** **PVC quick caulking shower drain, compression type** **Specify grid color: Chrome (084) or Brushed Nickel (105)**	$ 59
10000041-084		$ 59
10000043-084	**Shower Drain (sold separately)** **2-piece ABS shower drain with Chrome stainless steel grid**	$ 54
10033258	Single shower light 120V (sold separately)	$ 491
10004349-001	ABS shower drain with ABS grid (sold separately) Available color: White **(001)** and Bone **(004)**	$ 21
10004349-004		$ 21

RECOMMENDED DOORS - VISIT OUR WEBSITE FOR A COMPLETE LIST OF RECOMMENDED DOORS

SKU	Product Name	Pag.
137445	Radia Neo-round 40 x 40 x 71 ½ - 6mm	953

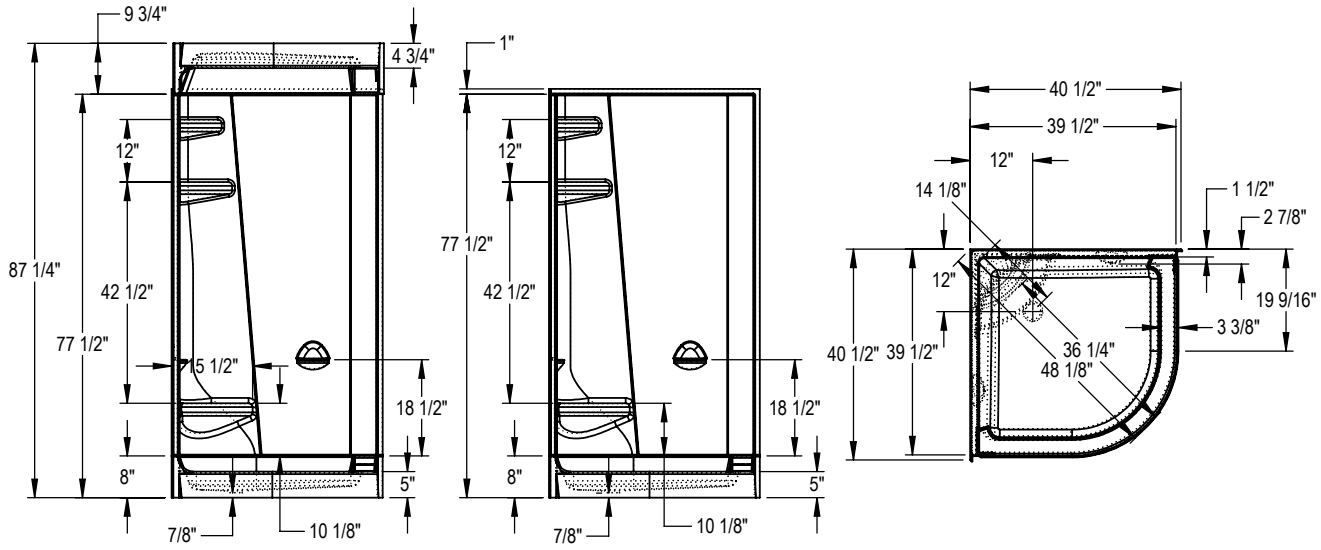

One piece with Seat

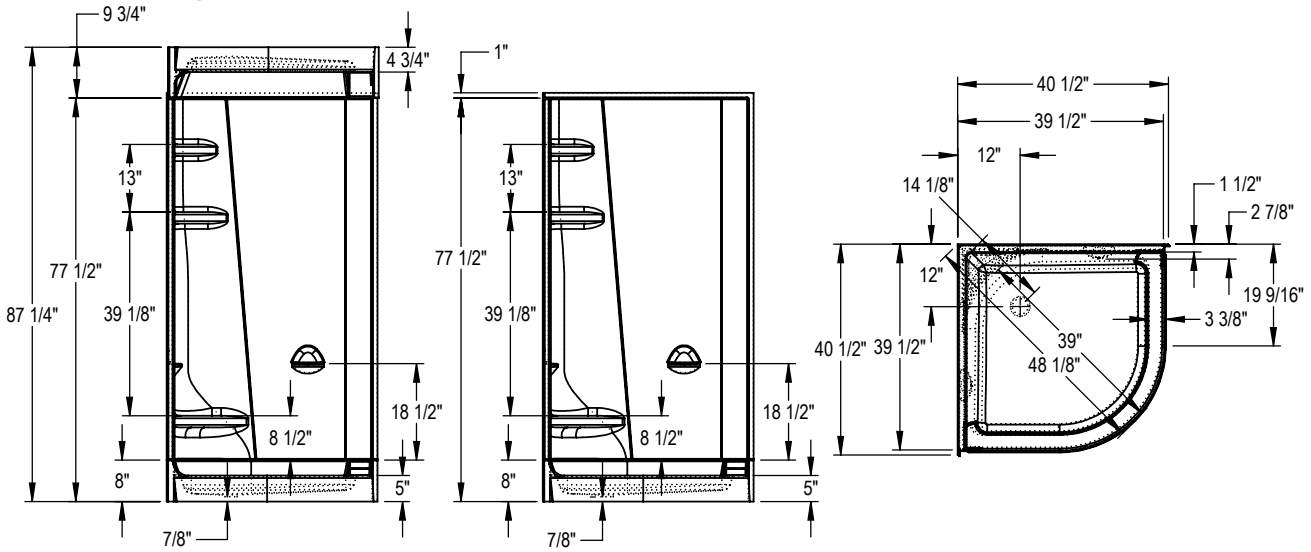

One piece with footrest

All dimensions are approximate. Structure measurements must be verified against the unit to ensure proper fit.

Freestyle 40 Round (1-piece)

Material : Acrylic

Features

- One piece design for a quick installation; perfect for new construction
- Built-in shelves provide generous storage space, making it easy to keep bathing essentials organized
- Round shower for a corner installation
- Acrylic surface resistant to stains
- Hygienic, non-porous surface for easy cleaning
- Optional roof cap: enhances versatility, provides added protection, and improves aesthetics
- Functional and versatile design to fit any bathroom style
- DIY Install
- Proudly made in North America

FREESTYLE 40 ROUND (1-PIECE) - 102999

SKU	Color	Configuration	Dimensions & Weight	Packaging	MSRP
102999-000-001-100	White	Corner Drain / No Seat Seat	39 1/2” x 39 1/2” x 77 1/2” / 108 lb	102.84 ft^3	$ 2959
102999-C-000-001		Corner Drain / Corner Seat			$ 2959

FREESTYLE 40 ROUND (2-PIECE) - 102999S

SKU	Color	Configuration	Dimensions & Weight	Packaging	MSRP
102999-S-000-001-	White	Corner Drain / No Seat Seat	39 1/2” x 39 1/2” x 77 3/4” / 110 lb	102.84 ft^3	$ 3184
102999-SC-000-001		Corner Drain / Corner Seat			$ 3184

COMMON OPTIONS

SKU	Description	MSRP
105108-000-001-000	Roof cap Available in White only **(001)**	$ 911
OPT20348-340	Integrated Shelves Guard Rails for Freestyle Showers Available colors: Chrome **(084)**, Brushed Nickel **(105)** and Matte Black **(340)** Click here for image	$ 0
OPT20348-084		$ 0
OPT20348-105		$ 0

ACCESSORIES

SKU	Description	MSRP
10000041-105	**Shower Drain (sold separately)** **PVC quick caulking shower drain, compression type** **Specify grid color: Chrome (084) or Brushed Nickel (105)**	$ 59
10000041-084		$ 59
10000043-084	**Shower Drain (sold separately)** **2-piece ABS shower drain with Chrome stainless steel grid**	$ 54
10033258	Single shower light 120V (sold separately)	$ 491
10004349-001	ABS shower drain with ABS grid (sold separately) Available color: White **(001)** and Bone **(004)**	$ 21
10004349-004		$ 21

RECOMMENDED DOORS - VISIT OUR WEBSITE FOR A COMPLETE LIST OF RECOMMENDED DOORS

SKU	Product Name	Pag.
137446	Radia Round 36 x 36 x 71 ½ - 6mm	955

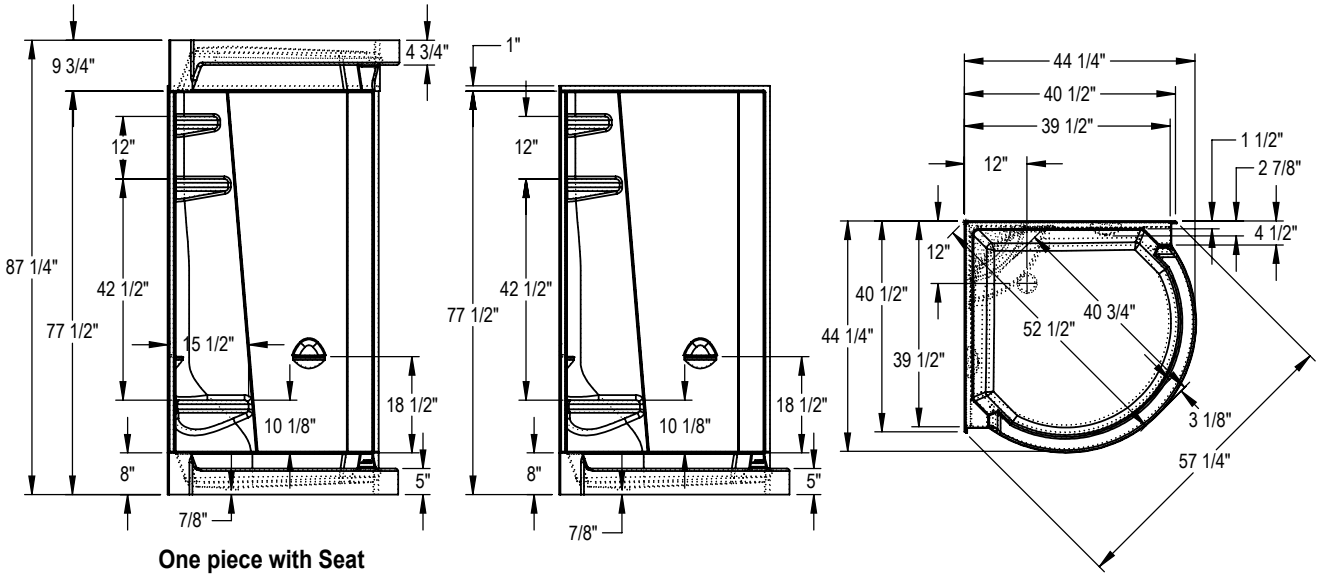

One piece with Seat

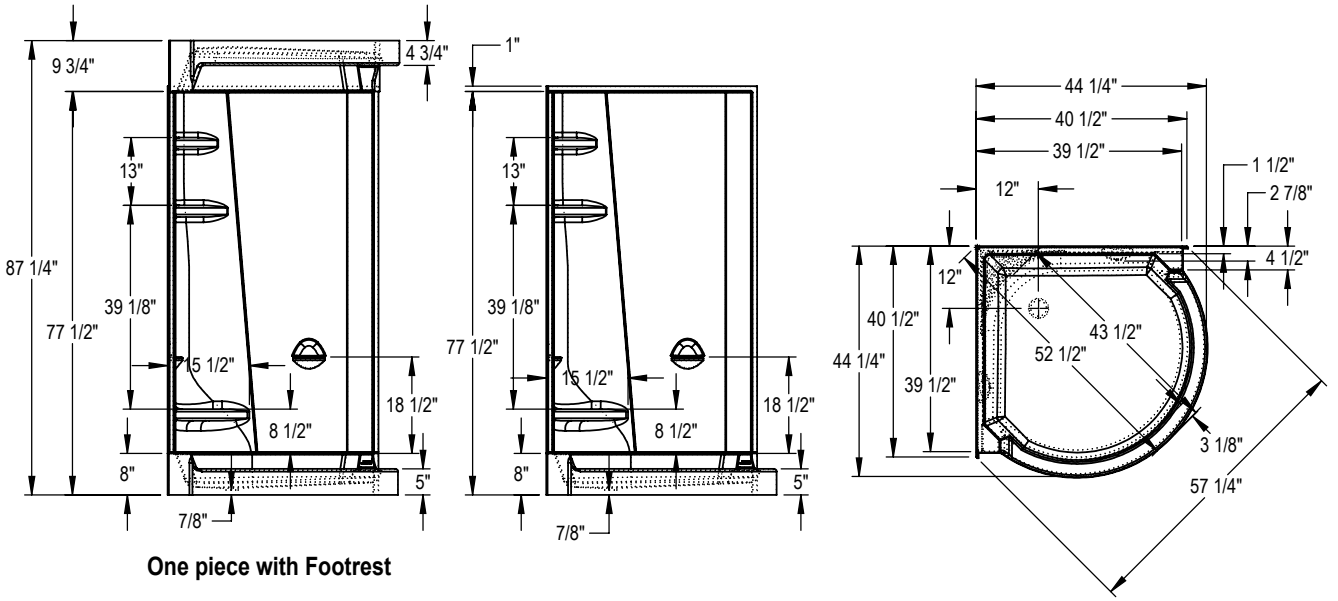

One piece with Footrest

All dimensions are approximate. Structure measurements must be verified against the unit to ensure proper fit.

Brio II

Material : Acrylic

Features

- 1-piece neo-angle corner shower with optional roof cap
- Integrated shelves, soap dish and footrest
- Optional roof cap light (recommended)

BRIO II - 102498

SKU	Color	Configuration	Dimensions & Weight	Packaging	MSRP
102498-000-001-000	White	Center Drain	39 1/2” x 39 1/2” x 77 3/4” / 107 lb	75 ft^3	$ 2176

COMMON OPTIONS

SKU	Description	MSRP
102511-000-001-000	Roof cap Standard color: White **(001)**	$ 1013

ACCESSORIES

SKU	Description	MSRP
10000041-105	**Shower Drain (sold separately)** **PVC quick caulking shower drain, compression type** **Specify grid color: Chrome (084) or Brushed Nickel (105)**	$ 59
10000041-084		$ 59
10000043-084	**Shower Drain (sold separately)** **2-piece ABS shower drain with Chrome stainless steel grid**	$ 54
10004349-001	ABS shower drain with ABS grid (sold separately) Available color: White **(001)** and Bone **(004)**	$ 21
10004349-004		$ 21

RECOMMENDED DOORS - VISIT OUR WEBSITE FOR A COMPLETE LIST OF RECOMMENDED DOORS

SKU	Product Name	Pag.
137441	Radia Neo-angle 38 x 38 x 71 ½ - 6mm	971
137901	Silhouette Neo-angle Pivot 38 x 38 x 70 in.	973
137710	Silhouette Plus Neo-angle 38 x 38 x 70 in.	975

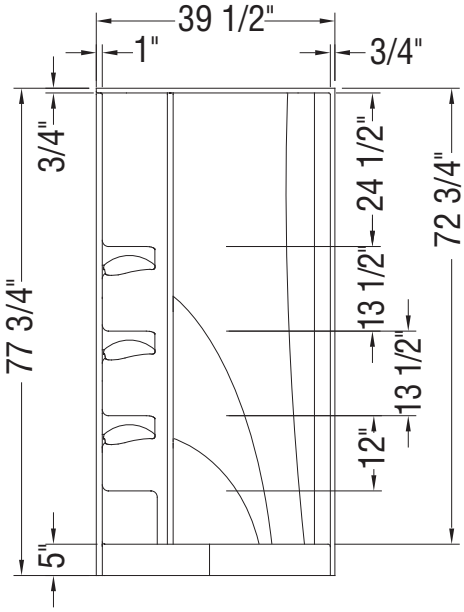

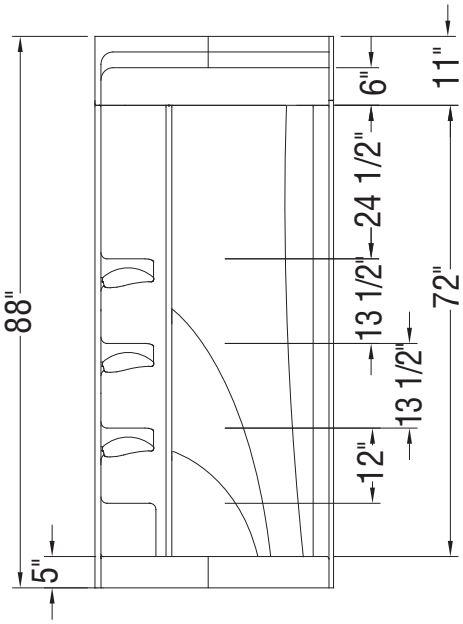

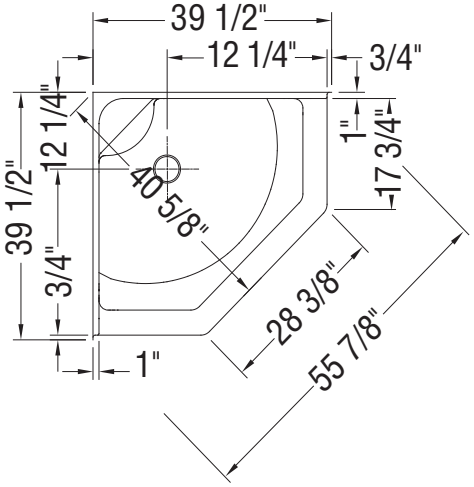

All dimensions are approximate. Structure measurements must be verified against the unit to ensure proper fit.

Novello II

Material : Acrylic

Features

- 1-piece neo-round corner shower with optional roof cap
- Integrated footrest, shelves and soap dish
- Optional roof cap light (recommended)

NOVELLO II - 102492

SKU	Color	Configuration	Dimensions & Weight	Packaging	MSRP
102492-000-001-000	White	Center Drain	37” x 37” x 77 1/2” / 98 lb	69 ft^3	$ 2166

COMMON OPTIONS

SKU	Description	MSRP
102505-000-001-000	Roof cap Standard colour: White **(001)**	$ 952

ACCESSORIES

SKU	Description	MSRP
10000041-105	**Shower Drain (sold separately)** **PVC quick caulking shower drain, compression type** **Specify grid color: Chrome (084) or Brushed Nickel (105)**	$ 59
10000041-084		$ 59
10000043-084	**Shower Drain (sold separately)** **2-piece ABS shower drain with Chrome stainless steel grid**	$ 54
10004349-001	ABS shower drain with ABS grid (sold separately) Available color: White **(001)** and Bone **(004)**	$ 21
10004349-004		$ 21

RECOMMENDED DOORS - VISIT OUR WEBSITE FOR A COMPLETE LIST OF RECOMMENDED DOORS

SKU	Product Name	Pag.
137444	Radia Neo-round 36 x 36 x 71 ½ - 6mm	953

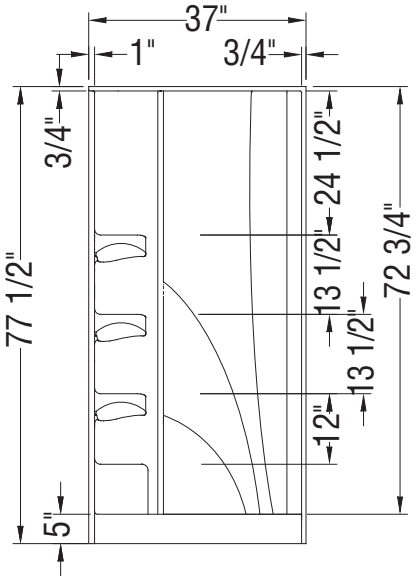

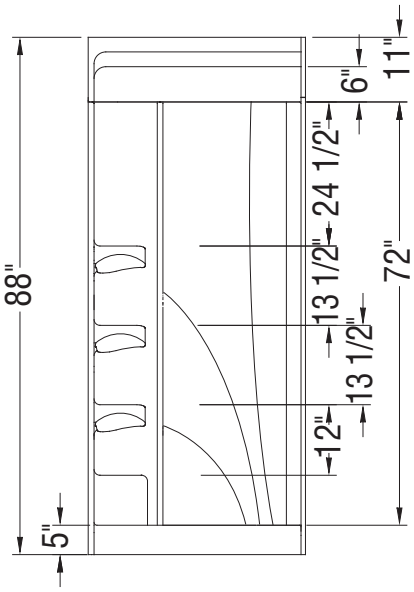

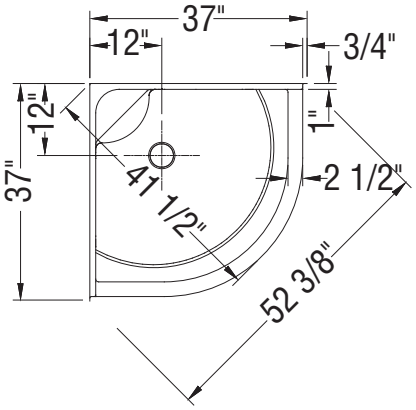

All dimensions are approximate. Structure measurements must be verified against the unit to ensure proper fit.

Go to Table of Contents

CSS36

Material : AcrylX

Features

- 1-piece neo-angle corner shower without roof cap
- Integrated shelf
- Center drain

CSS36 - 140007

SKU	Color	Configuration	Dimensions & Weight	Packaging	MSRP
140007-000-002-000	White	Center Drain	37 5/8” x 37 5/8” x 77 3/4” / 109 lb	70 ft^3	$ 2223

ACCESSORIES

SKU	Description	MSRP
10000041-105	**Shower Drain (sold separately)** **PVC quick caulking shower drain, compression type** **Specify grid color: Chrome (084) or Brushed Nickel (105)**	$ 59
10000041-084		$ 59
10000043-084	**Shower Drain (sold separately)** **2-piece ABS shower drain with Chrome stainless steel grid**	$ 54
10004349-001	ABS shower drain with ABS grid (sold separately) Available color: White **(001)** and Bone **(004)**	$ 21
10004349-004		$ 21

RECOMMENDED DOORS - VISIT OUR WEBSITE FOR A COMPLETE LIST OF RECOMMENDED DOORS

SKU	Product Name	Pag.
137440	Radia Neo-angle 36 x 36 x 71 ½ - 6mm	951
137720	Silhouette Plus Neo-angle 36 x 36 x 70 in.	975
137904	Silhouette Neo-angle Pivot 36 x 36 x 70 in.	973

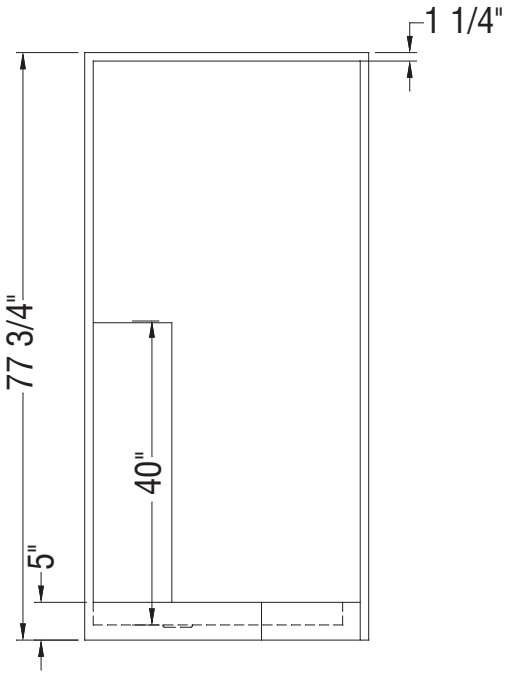

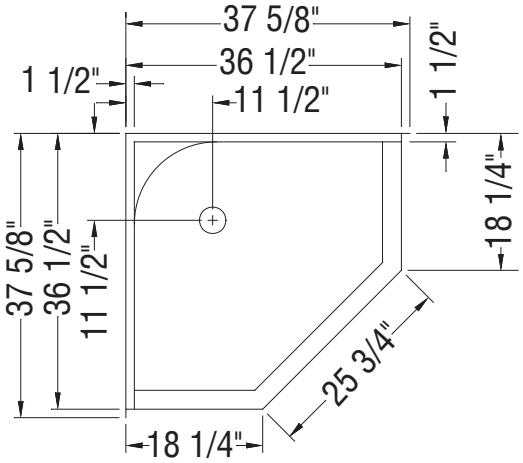

All dimensions are approximate. Structure measurements must be verified against the unit to ensure proper fit.

Go to Table of Contents

CSS40

Material : AcrylX

Features

- 1-piece neo-angle corner shower without roof cap
- Integrated shelf
- Center drain

CSS40 - 140009

SKU	Color	Configuration	Dimensions & Weight	Packaging	MSRP
140009-000-002-000	White	Center Drain	41 1/2” x 41 1/2” x 77 1/2” / 109 lb	100 ft^3	$ 2429

ACCESSORIES

SKU	Description	MSRP
10000041-105	**Shower Drain (sold separately)** **PVC quick caulking shower drain, compression type** **Specify grid color: Chrome (084) or Brushed Nickel (105)**	$ 59
10000041-084		$ 59
10000043-084	**Shower Drain (sold separately)** **2-piece ABS shower drain with Chrome stainless steel grid**	$ 54
10004349-001	ABS shower drain with ABS grid (sold separately) Available color: White **(001)** and Bone **(004)**	$ 21
10004349-004		$ 21

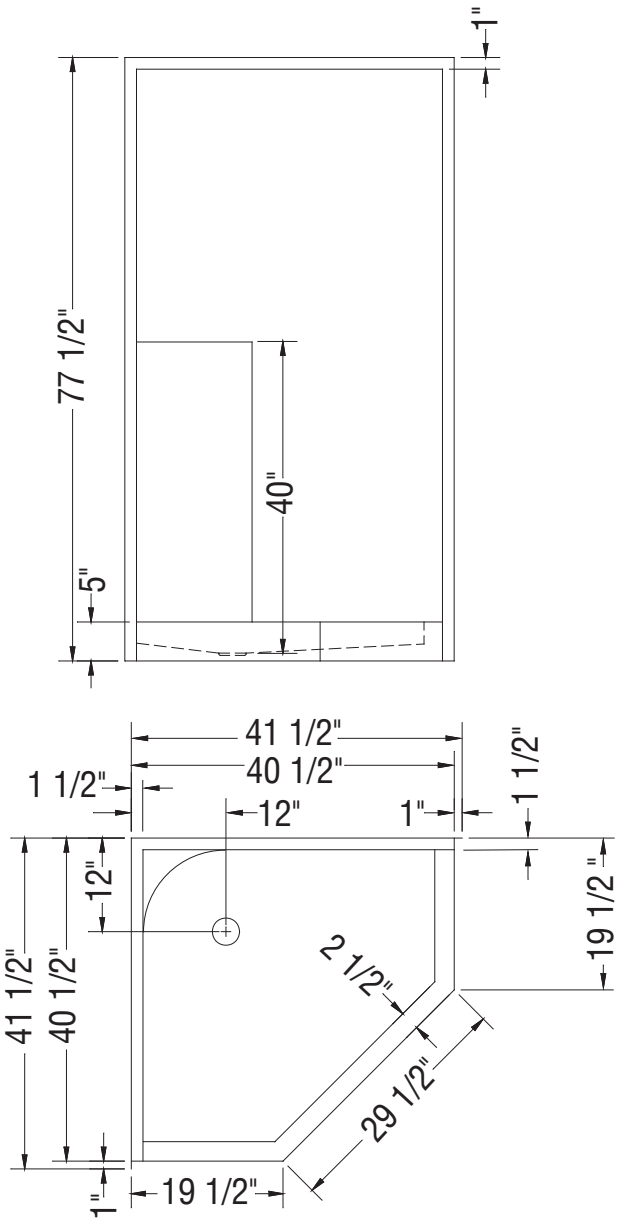

Toutes ces dimensions sont approximatives.
Afin d'assurer une installation parfaite, les dimensions de la structure doivent être vérifiées à partir de l'unité.

Galaxie II

Material : AcrylX

Features

- 1-piece neo-round corner shower
- Integrated shelves and soap dish
- Center drain

GALAXIE II - 105222

SKU	Color	Configuration	Dimensions & Weight	Packaging	MSRP
105222-000-002-000	White	Center Drain	36 3/4” x 36 3/4” x 78 3/4” / 88 lb	35 ft^3	$ 1851

ACCESSORIES

SKU	Description	MSRP
10000041-105	**Shower Drain (sold separately)** **PVC quick caulking shower drain, compression type** **Specify grid color: Chrome (084) or Brushed Nickel (105)**	$ 59
10000041-084		$ 59
10000043-084	**Shower Drain (sold separately)** **2-piece ABS shower drain with Chrome stainless steel grid**	$ 54
10004349-001	ABS shower drain with ABS grid (sold separately) Available color: White **(001)** and Bone **(004)**	$ 21
10004349-004		$ 21

RECOMMENDED DOORS - VISIT OUR WEBSITE FOR A COMPLETE LIST OF RECOMMENDED DOORS

SKU	Product Name	Pag.
137444	Radia Neo-round 36 x 36 x 71 ½ - 6mm	953

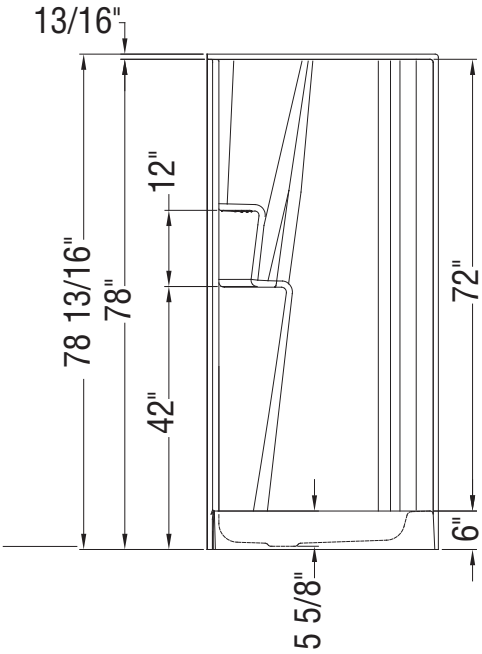

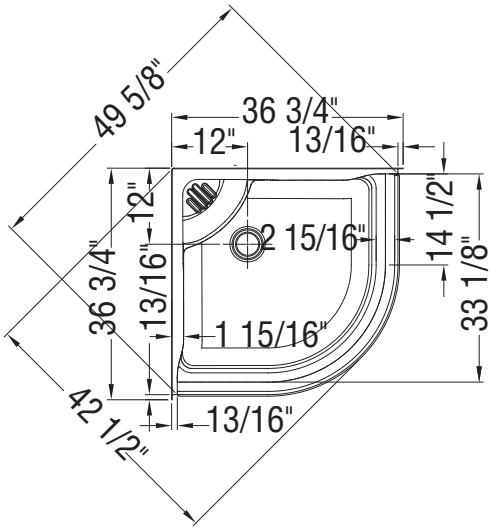

All dimensions are approximate. Structure measurements must be verified against the unit to ensure proper fit.

Imperial II

Material : AcrylX

Features

- 1-piece neo-angle corner shower without roof cap
- Integrated shelves
- Center drain

IMPERIAL II - 105219

SKU	Color	Configuration	Dimensions & Weight	Packaging	MSRP
105219-000-002-000	White	Center Drain	38 1/2” x 38 1/2” x 78 3/4” / 90 lb	73 ft^3	$ 1860

ACCESSORIES

SKU	Description	MSRP
10000041-105	**Shower Drain (sold separately)** **PVC quick caulking shower drain, compression type** **Specify grid color: Chrome (084) or Brushed Nickel (105)**	$ 59
10000041-084		$ 59
10000043-084	**Shower Drain (sold separately)** **2-piece ABS shower drain with Chrome stainless steel grid**	$ 54
10004349-001	ABS shower drain with ABS grid (sold separately) Available color: White **(001)** and Bone **(004)**	$ 21
10004349-004		$ 21

RECOMMENDED DOORS - VISIT OUR WEBSITE FOR A COMPLETE LIST OF RECOMMENDED DOORS

SKU	Product Name	Pag.
137441	Radia Neo-angle 38 x 38 x 71 ½ - 6mm	971
137901	Silhouette Neo-angle Pivot 38 x 38 x 70 in.	973
137710	Silhouette Plus Neo-angle 38 x 38 x 70 in.	975

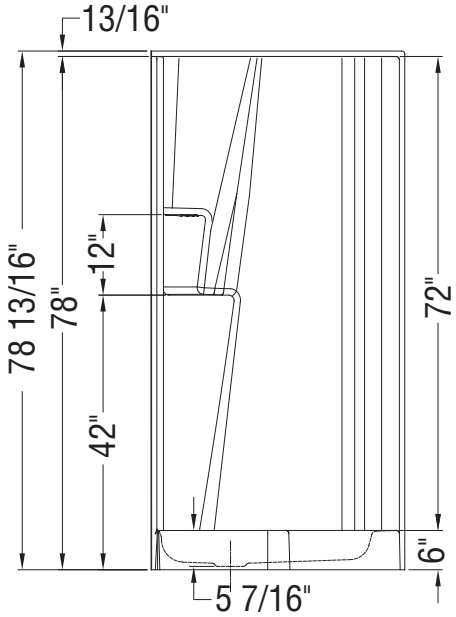

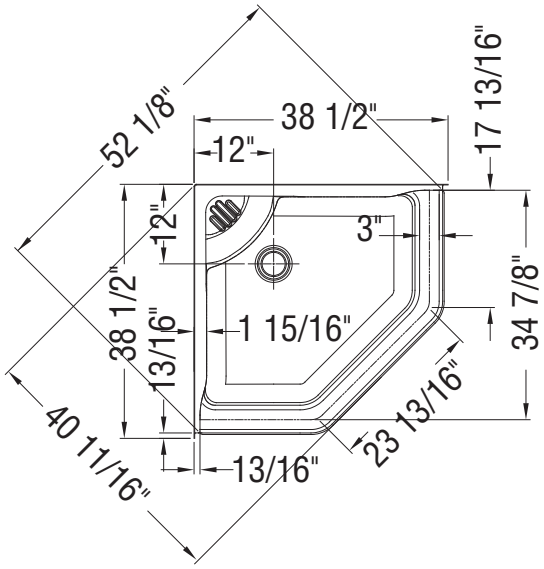

All dimensions are approximate. Structure measurements must be verified against the unit to ensure proper fit.

SECCSS36

Material : AcrylX

Features

- 2-piece neo-angle corner shower without roof cap
- Sectional unit ideal for renovation projects
- Integrated soap dish
- Center drain

SECCSS36 - 140079

SKU	Color	Configuration	Dimensions & Weight	Packaging	MSRP
140079-000-002-003	White	Center Drain	37 1/2” x 37 1/2” x 77 3/4” / 111 lb	70 ft^3	$ 3043

ACCESSORIES

SKU	Description	MSRP
10000041-105	**Shower Drain (sold separately)** **PVC quick caulking shower drain, compression type** **Specify grid color: Chrome (084) or Brushed Nickel (105)**	$ 59
10000041-084		$ 59
10000043-084	**Shower Drain (sold separately)** **2-piece ABS shower drain with Chrome stainless steel grid**	$ 54
10004349-001	ABS shower drain with ABS grid (sold separately) Available color: White **(001)** and Bone **(004)**	$ 21
10004349-004		$ 21

RECOMMENDED DOORS - VISIT OUR WEBSITE FOR A COMPLETE LIST OF RECOMMENDED DOORS

SKU	Product Name	Pag.
137440	Radia Neo-angle 36 x 36 x 71 ½ - 6mm	951

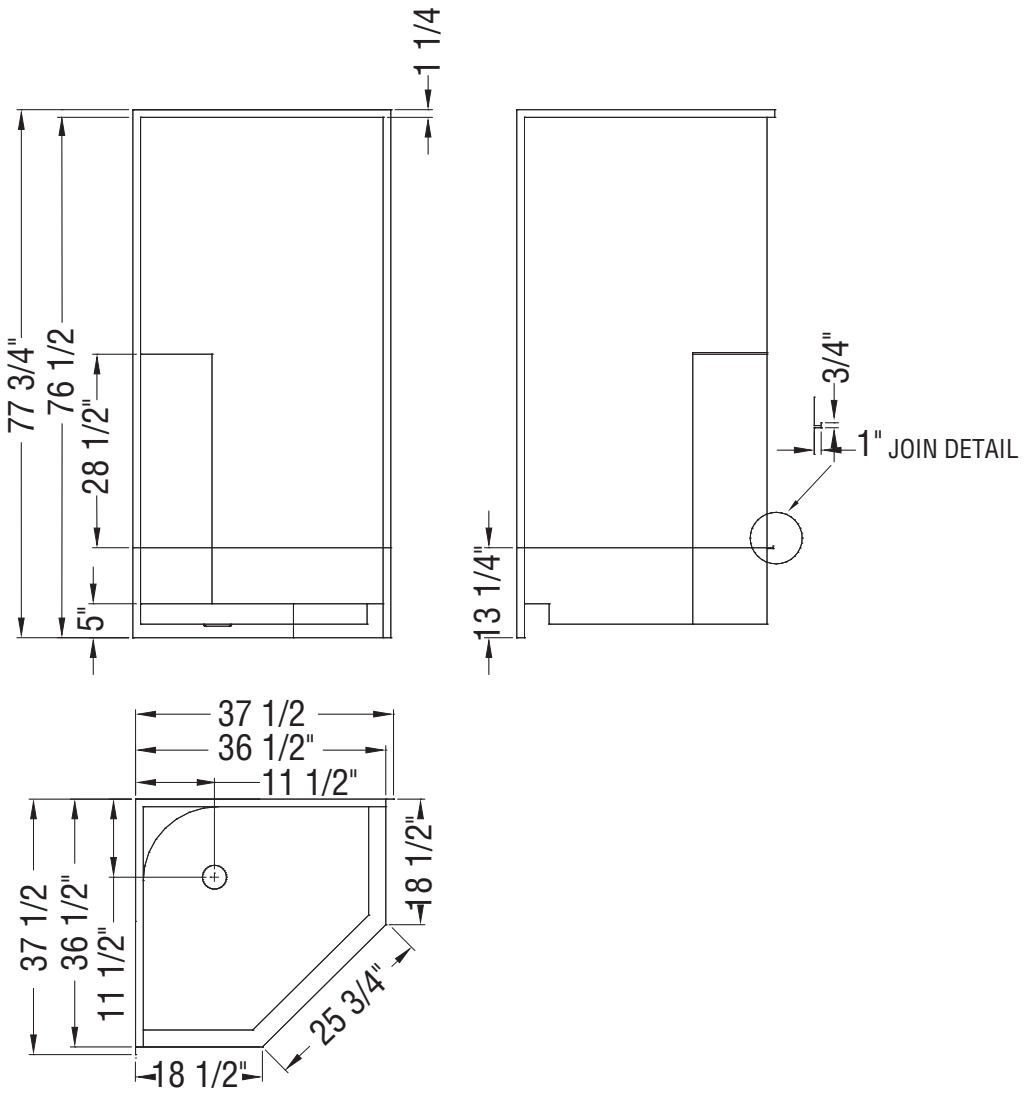

All dimensions are approximate. Structure measurements must be verified against the unit to ensure proper fit.

Shower Bases

B3X 4836 corner base with Halo door

Go to Table of Contents

B3Round 3636

Material : Acrylic

Features

- Model Size : 35 7/8 L in. X 35 7/8 W in. X 3 H in.
- Acrylic square shower base with round drain
- Low 3 in. threshold base allowing an easy and safe access
- Certain configurations available with Stabili-T anti-slip bottom meeting ADA, ANSI or CSA
- Multiple configurations available to accomodate different types of installation
- Compatible with Utile, most glue-up shower walls and ceramic tiles
- Integrated leak proof tiling flanges
- 25-year warranty for peace of mind
- High gloss finish resistant to dulling, scratching, and fading

B3ROUND 3636 - 410000

SKU	Color	Configuration	Dimensions & Weight	Packaging	MSRP
410000-500-001-000	White	Center Drain / Corner Left or Right	35 7/8” x 35 7/8” x 3” / 35 lb	29.78 ft³	$ 812
410000-501-001-000		Center Drain / Alcove			$ 812
410000-505-001-000		Center Drain / Wall-mount			$ 812
410000-540-001-000		Center Drain / Corner Left or Right - Stabili-T			$ 812
410000-541-001-000		Center Drain / Alcove - Stabili-T			$ 812

RECOMMENDED DOORS - VISIT OUR WEBSITE FOR A COMPLETE LIST OF RECOMMENDED DOORS

SKU	Product Name	Pag.
139575	Reveal Sleek 71 32 1/2-35 1/2 x 71 1/2 - 8mm	904
139584	Capella 78 32 ½-35 ½ x 78 - 8mm	878
136676	Reveal 71 32 ½-35 ½ x 71 ½ - 8mm	901

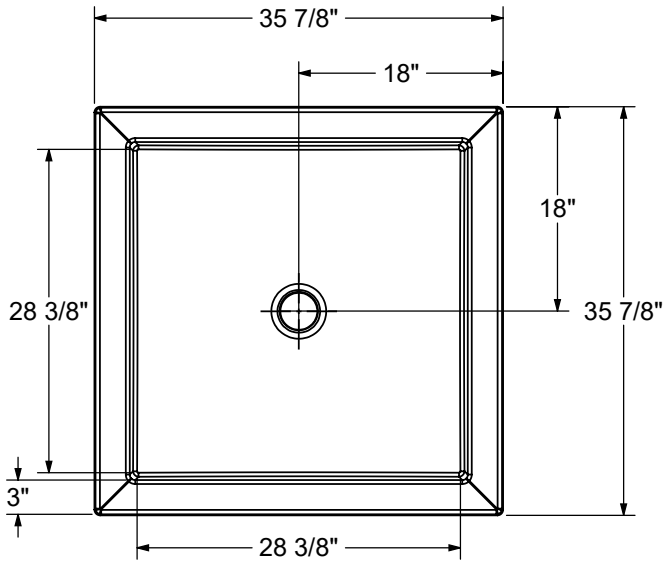

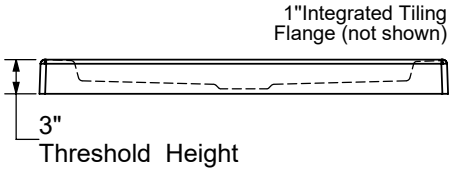

This technical drawing is universal for every 3636 configuration.

Integrated tiling flange : 1" height x 1/4" thick (not shown)
Tiling flange position is determined by chosen configuration.

All dimensions are approximate. Structure measurements must be verified against the unit to ensure proper fit.

B3Round 4236

Material : Acrylic

Features

- Model Size : 41 7/8 L in. X 35 7/8 W in. X 3 H in.
- Acrylic rectangular shower base with round drain
- Low 3 in. threshold base allowing an easy and safe access
- Certain configurations available with Stabili-T anti-slip bottom meeting ADA, ANSI or CSA
- Multiple configurations available to accomodate different types of installation
- Compatible with most glue-up Shower walls and ceramic tiles
- Integrated leak proof tiling flanges
- 25-year warranty for peace of mind
- High gloss finish resistant to dulling, scratching, and fading

B3ROUND 4236 - 410034

SKU	Color	Configuration	Dimensions & Weight	Packaging	MSRP
410034-541-001-000	White	Center Drain / Alcove - Stabili-T	41 7/8” x 35 7/8” x 3” / 45 lb	46.12 ft^3	$ 1023
410034-542-001-000		Center Drain / Corner Left - Stabili-T			$ 1023
410034-543-001-000		Center Drain / Corner Right - Stabili-T			$ 1023

RECOMMENDED DOORS - VISIT OUR WEBSITE FOR A COMPLETE LIST OF RECOMMENDED DOORS

SKU	Product Name	Pag.
139576	Reveal Sleek 71 38-41 x 71 1/2 - 8mm	904
136679	Reveal 71 38-41 x 71 ½ - 8 mm	901

The hatched area represent the antislip surface

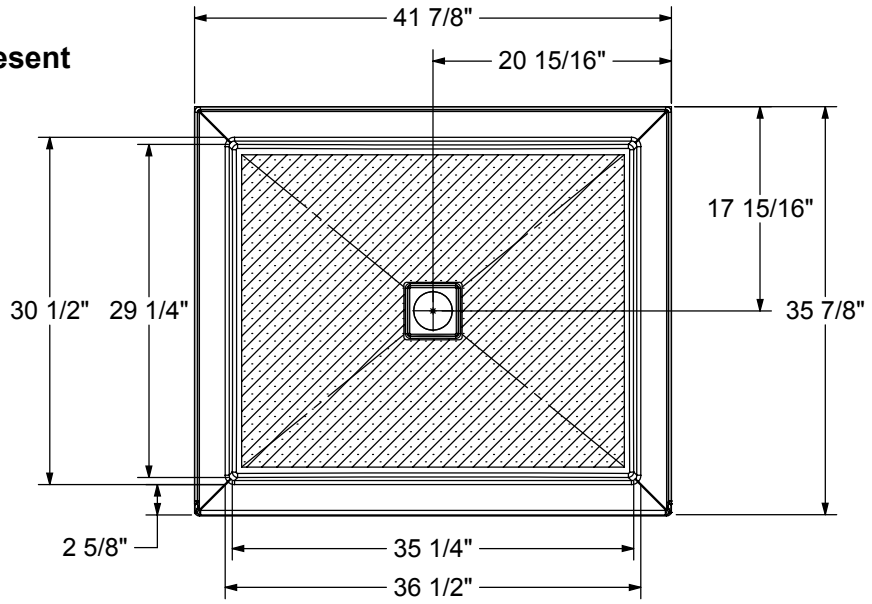

DRAIN INCLUDED ON B3 SQUARE ONLY

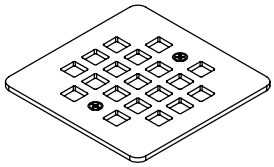

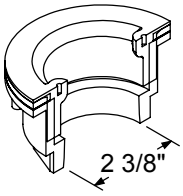

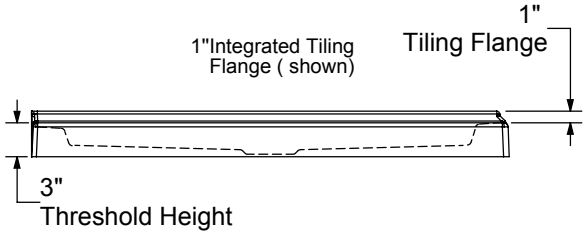

This technical drawing is universal for every 4236 configuration.

Integrated tiling flange : 1" height x 1/4" thick
Tiling flange position is determined by chosen configuration.

All dimensions are approximate. Structure measurements must be verified against the unit to ensure proper fit.

B3Round 4832

Material : Acrylic

Features

- Model Size : 47 7/8 L in. X 31 7/8 W in. X 3 H in.
- Acrylic rectangular shower base with round drain
- Low 3 in. threshold base allowing an easy and safe access
- Certain configurations available with Stabili-T anti-slip bottom meeting ADA, ANSI or CSA
- Multiple configurations available to accomodate different types of installation
- Compatible with Utile, most glue-up shower walls and ceramic tiles
- Integrated leak proof tiling flanges
- 25-year warranty for peace of mind
- High gloss finish resistant to dulling, scratching, and fading

B3ROUND 4832 - 410001

SKU	Color	Configuration	Dimensions & Weight	Packaging	MSRP
410001-501-001-000	White	Center Drain / No Seat Seat / Alcove	47 7/8” x 31 7/8” x 3” / 41 lb	6.6 ft³	$ 1023
410001-502-001-000		Center Drain / No Seat Seat / Corner Left			$ 1023
410001-503-001-000		Center Drain / No Seat Seat / Corner Right			$ 1023
410001-504-001-000		Center Drain / Alcove Deep			$ 1023
410001-505-001-000		Center Drain / Wall-mount			$ 1023
410001-506-001-000		Center Drain / Tunnel			$ 1023
410001-541-001-000		Center Drain / Alcove - Stabili-T			$ 1023
410001-542-001-000		Center Drain / Corner Left - Stabili-T			$ 1023
410001-543-001-000		Center Drain / Corner Right - Stabili-T			$ 1023

RECOMMENDED DOORS - VISIT OUR WEBSITE FOR A COMPLETE LIST OF RECOMMENDED DOORS

SKU	Product Name	Pag.
135321	Uptown 44-47 x 76 in. 8 mm	854
138950	Halo Pro 44 ½-47 x 78 ¾ - 8mm	866
135334	Incognito 76 44-47 x 76 in. 8mm Shower Door	839
139352	Incognito 70 44-47 x 70 1/2 in. 8mm Shower Door	833
139349	Incognito 70 44-47 x 70 1/2 in. 6mm Shower Door	831
138460	Vela 44 ½-47 x 78 ¾ - 8mm	858
136693	Revelation Round 44-47 x 70 ½-73 - 8mm	848
135690	Revelation Square 44-47 x 70 ½-73 - 6mm	850
134563	Kameleon 43-47 x 71 - 6mm	822
135323	Uptown 44-47 x 76 in. 8 mm	876
135325	Uptown 45-47 x 76 in. 8 mm	907
134663	Kameleon SC 43-47 x 71 - 6mm	818
139578	Reveal Sleek 71 44-47 x 71 1/2 - 8mm	904
134571	Kameleon 43-47 x 71 - 8mm	827
135870	Nebula 44 ½-46 ½ x 78 ¾ - 8mm	856
138954	Halo Pro TB 44 ½-47 x 78 ¾ - 8mm	868
135331	Incognito 76 Shaker 44-47 x 76 in. 8mm Shower Door	837
136271	Duel 44-47 x 70 1/2-74	829
137421	Odyssey SC 45-47 1/2 x 78 - 8 mm	874
136956	Duel Alto 44-47 X 78 - 8 mm	812
138761	Inverto 43-47 x 70 ½-74 - 8mm	843

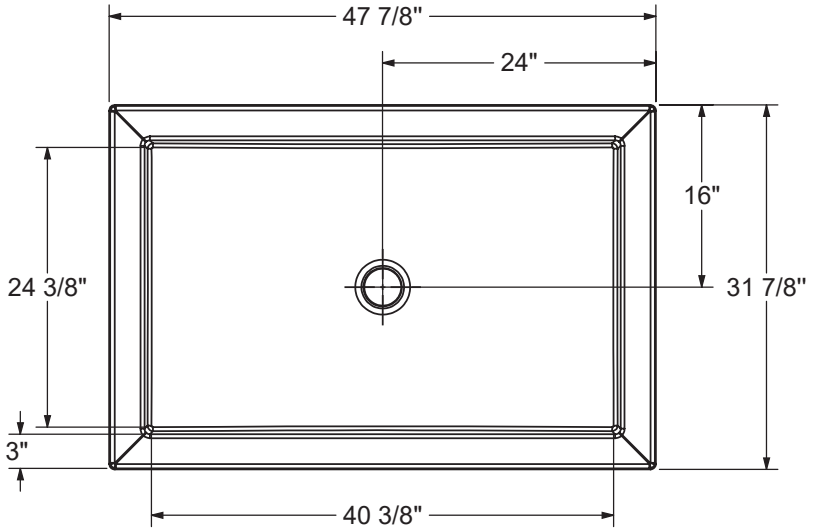

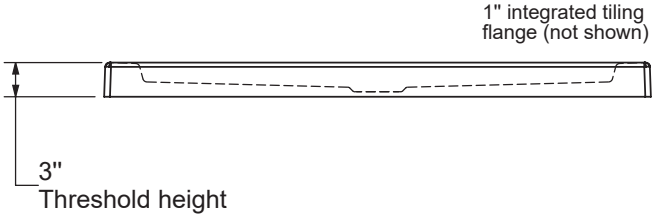

This technical drawing is universal for every 4832 configuration.

Integrated tiling flange : 1" height x 1/4" thick (not shown)
Tiling flange position is determined by chosen configuration.

All dimensions are approximate. Structure measurements must be verified against the unit to ensure proper fit.

B3Round 4834

Material : Acrylic

Features

- Model Size : 47 7/8 L in. X 33 7/8 W in. X 3 H in.
- Acrylic rectangular shower base with round drain
- Low 3 in. threshold base allowing an easy and safe access
- Certain configurations available with Stabili-T anti-slip bottom meeting ADA, ANSI or CSA
- Multiple configurations available to accomodate different types of installation
- Compatible with most glue-up Shower walls and ceramic tiles
- Integrated leak proof tiling flanges
- 25-year warranty for peace of mind
- High gloss finish resistant to dulling, scratching, and fading

B3ROUND 4834 - 410002

SKU	Color	Configuration	Dimensions & Weight	Packaging	MSRP
410002-501-001-000	White	Center Drain / No Seat Seat / Alcove	47 7/8” x 33 7/8” x 3” / 44 lb	52.73 ft³	$ 1045
410002-502-001-000		Center Drain / No Seat Seat / Corner Left			$ 1045
410002-503-001-000		Center Drain / No Seat Seat / Corner Right			$ 1045
410002-504-001-000		Center Drain / Alcove Deep			$ 1045
410002-505-001-000		Center Drain / Wall-mount			$ 1045
410002-506-001-000		Center Drain / Tunnel			$ 1045
410002-541-001-000		Center Drain / Alcove - Stabili-T			$ 1045
410002-542-001-000		Center Drain / Corner Left - Stabili-T			$ 1045
410002-543-001-000		Center Drain / Corner Right - Stabili-T			$ 1045

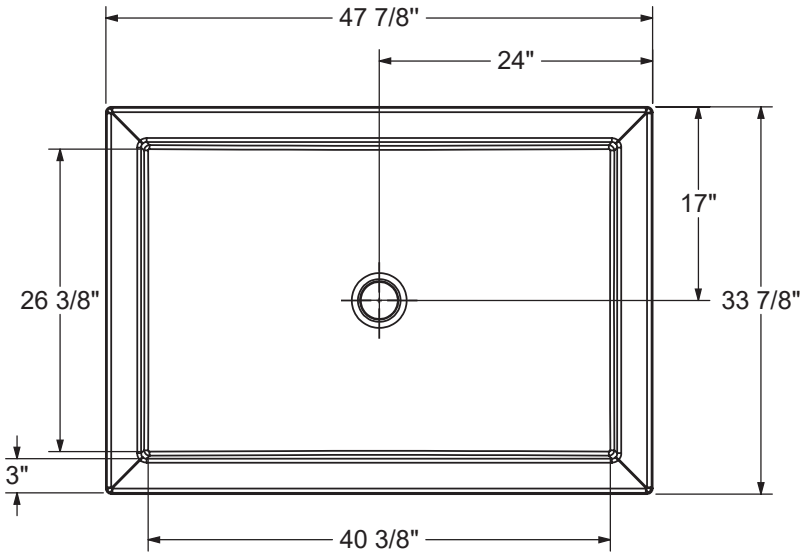

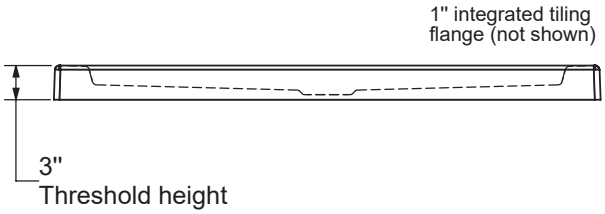

This technical drawing is universal for every 4834 configuration.

Integrated tiling flange : 1" height x 1/4" thick (not shown)
Tiling flange position is determined by chosen configuration.

All dimensions are approximate. Structure measurements must be verified against the unit to ensure proper fit.

B3Round 4836

Material : Acrylic

Features

- Model Size : 47 7/8 L in. X 35 7/8 W in. X 3 H in.
- Acrylic rectangular shower base with round drain
- Low 3 in. threshold base allowing an easy and safe access
- Certain configurations available with Stabili-T anti-slip bottom meeting ADA, ANSI or CSA
- Multiple configurations available to accomodate different types of installation
- Compatible with Utile, most glue-up shower walls and ceramic tiles
- Integrated leak proof tiling flanges
- 25-year warranty for peace of mind
- High gloss finish resistant to dulling, scratching, and fading

B3ROUND 4836 - 410003

SKU	Color	Configuration	Dimensions & Weight	Packaging	MSRP
410003-501-001-000	White	Center Drain / Alcove	47 7/8” x 35 7/8” x 3” / 47 lb	52.73 ft³	$ 1069
410003-502-001-000		Center Drain / Corner Left			$ 1069
410003-503-001-000		Center Drain / Corner Right			$ 1069
410003-504-001-000		Center Drain / Alcove Deep			$ 1069
410003-505-001-000		Center Drain / Wall-mount			$ 1069
410003-506-001-000		Center Drain / Tunnel			$ 1069
410003-541-001-000		Center Drain / Alcove - Stabili-T			$ 1069
410003-542-001-000		Center Drain / Corner Left - Stabili-T			$ 1069
410003-543-001-000		Center Drain / Corner Right - Stabili-T			$ 1069

RECOMMENDED DOORS - VISIT OUR WEBSITE FOR A COMPLETE LIST OF RECOMMENDED DOORS

SKU	Product Name	Pag.
138996	Halo 44 ½-47 x 78 ¾ - 8mm	870
135321	Uptown 44-47 x 76 in. 8 mm	854
135323		876
135325	Uptown 45-47 x 76 in. 8 mm	907
135236	Connect Pro 45-46 ½ x 76 - 6mm	862
139578	Reveal Sleek 71 44-47 x 71 1/2 - 8mm	904
138540	Halo Pro GS 44 1/2-47 X 78 3/4 - 8mm	864
136956	Duel Alto 44-47 X 78 - 8 mm	812
136271	Duel 44-47 x 70 1/2-74	829
135870	Nebula 44 ½-46 ½ x 78 ¾ - 8mm	856
139586	Capella 78 44-47 x 78 - 8mm	878
136671	Reveal 71 44-47 x 71 ½ - 8mm	901

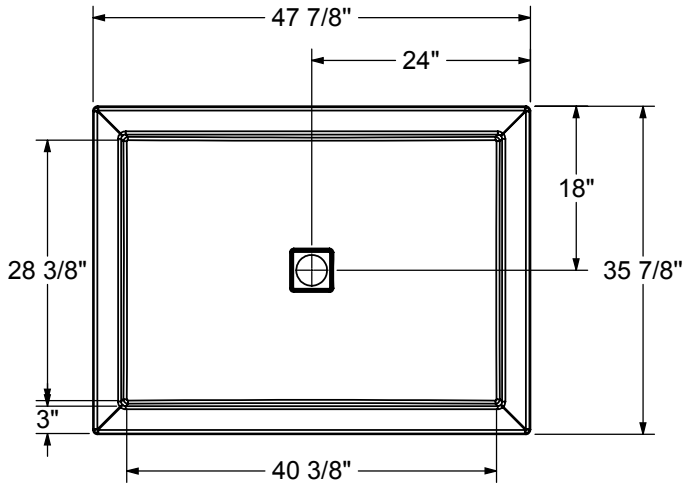

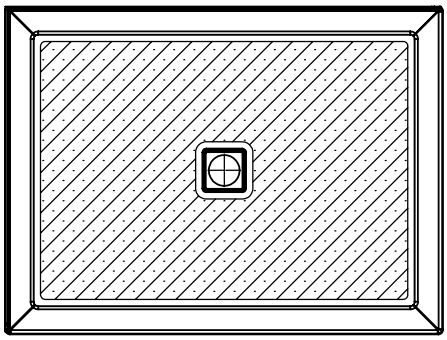

The hatched area represent the anti-slip surface

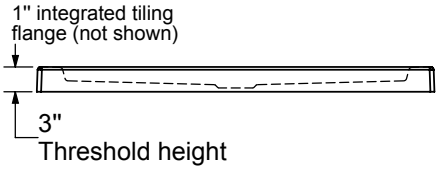

DRAIN INCLUDED ON B3 SQUARE ONLY

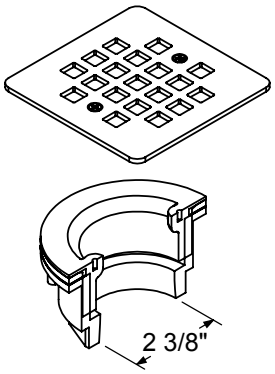

This technical drawing is universal for every 4836 configuration.

Integrated tiling flange : 1" height x 1/4" thick (not shown)
Tiling flange position is determined by chosen configuration.

All dimensions are approximate. Structure measurements must be verified against the unit to ensure proper fit.

B3Round 4842

Material : Acrylic

Features

- Model Size : 47 7/8 L in. X 41 7/8 W in. X 3 H in.
- Acrylic rectangular shower base with round drain
- Low 3 in. threshold base allowing an easy and safe access
- Certain configurations available with Stabili-T anti-slip bottom meeting ADA, ANSI or CSA
- Multiple configurations available to accomodate different types of installation
- Compatible with most glue-up Shower walls and ceramic tiles
- Integrated leak proof tiling flanges
- 25-year warranty for peace of mind
- High gloss finish resistant to dulling, scratching, and fading

B3ROUND 4842 - 410043

SKU	Color	Configuration	Dimensions & Weight	Packaging	MSRP
410043-541-001-000	White	Center Drain / Alcove - Stabili-T	47 7/8” x 41 7/8” x 3” / 56 lb	4.64 ft^3	$ 1159
410043-542-001-000		Center Drain / Corner Left - Stabili-T			$ 1159
410043-543-001-000		Center Drain / Corner Right - Stabili-T			$ 1159
410043-544-001-000		Center Drain / Alcove Deep - Stabili-T			$ 1159

RECOMMENDED DOORS - VISIT OUR WEBSITE FOR A COMPLETE LIST OF RECOMMENDED DOORS

SKU	Product Name	Pag.
138268	Manhattan 39-41 x 68	891
138520	Incognito 74 39-42 x 74 in. 8mm Shower Door	835
139576	Reveal Sleek 71 38-41 x 71 1/2 - 8mm	904
134562	Kameleon 40-44 x 71 - 6mm	825
134662	Kameleon SC 40-44 x 71 - 6mm	816
136679	Reveal 71 38-41 x 71 ½ - 8 mm	901

BASE MODEL

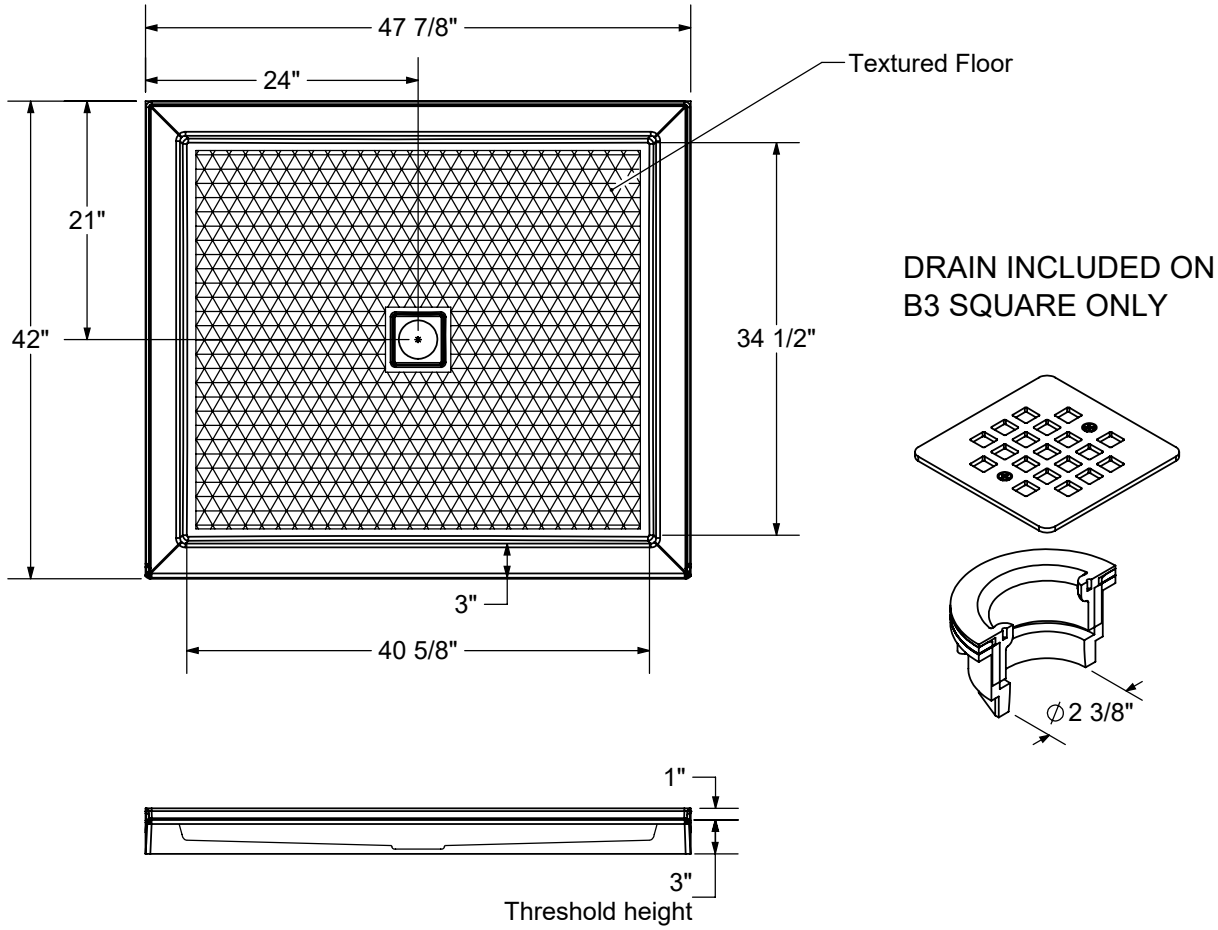

- **All dimensions are approximate**
- **Structure measurements must be verified against the unit to ensure proper fit**
- **Installation to be completed in accordance with manufacturers specifications**
- **Do not scale drawings**

B3Round 6030

Material : Acrylic

Features

- Model Size : 59 7/8 L in. X 29 7/8 W in. X 3 H in.
- Acrylic rectangular shower base with round drain
- Low 3 in. threshold base allowing an easy and safe access
- Certain configurations available with Stabili-T anti-slip bottom meeting ADA, ANSI or CSA
- Multiple configurations available to accomodate different types of installation
- Compatible with most glue-up Shower walls and ceramic tiles
- Integrated leak proof tiling flanges
- 25-year warranty for peace of mind
- High gloss finish resistant to dulling, scratching, and fading

B3ROUND 6030 - 410004

SKU	Color	Configuration	Dimensions & Weight	Packaging	MSRP
410004-501-001-001	White	Left Drain / No Seat Seat / Alcove	59 7/8” x 29 7/8” x 3” / 52 lb	81.75 ft^3	$ 1279
410004-501-001-002		Right Drain / No Seat Seat / Alcove			$ 1279
410004-502-001-001		Left Drain / No Seat Seat / Corner Left			$ 1279
410004-503-001-002		Right Drain / No Seat Seat / Corner Right			$ 1279
410004-504-001-000		Back End Drain / Alcove Deep			$ 1279
410004-505-001-001		Left Drain / Wall-mount			$ 1279
410004-505-001-002		Right Drain / Wall-mount			$ 1279
410004-541-001-001		Left Drain / Alcove - Stabili-T			$ 1279
410004-541-001-002		Right Drain / Alcove - Stabili-T			$ 1279
410004-542-001-001		Left Drain / Corner Left - Stabili-T			$ 1279
410004-543-001-002		Right Drain / Corner Right - Stabili-T			$ 1279

RECOMMENDED DOORS - VISIT OUR WEBSITE FOR A COMPLETE LIST OF RECOMMENDED DOORS

SKU	Product Name	Pag.
138277	Manhattan 57-59 x 68	893
138997	Halo 56 ½-59 x 78 ¾ - 8mm	870
139353	Incognito 70 56-59 x 70 1/2 in. 8mm Shower door	833
139350	Incognito 70 56-59 x 70 1/2 in. 6mm Shower door	831
135332	Incognito 76 Shaker 56-59 x 76 in. 8mm Shower Door	837
135335	Incognito 76 56-59 x 76 in. 8mm Shower Door	839
136335	Incognito 76 Smoke 56-59 x 76 - 8mm	841
135694	Revelation Square 56-59 x 70 ½-73 - 8mm	852
136691	Revelation Round 56-59 x 70 1/2-73	846
135691	Revelation Square 56-59 x 70 ½-73 - 6mm	850
136694	Revelation Round 56-59 x 70 ½-73 - 8mm	848
135322	Uptown 56-59 x 76 in. 8 mm	854
135324		876
135326	Uptown 57-59 x 76 in. 8 mm	907
135238	Connect Pro 57-58 ½ x 76 - 6mm	862
139580	Reveal Sleek 71 56-59 x 71 1/2 - 8mm	905
138956	Halo Pro TB 56 ½-59 x 78 ¾ - 8mm	868
138952	Halo Pro 56 ½-59 x 78 ¾ - 8mm	866
138541	Halo Pro GS 56 1/2-59 X 78 3/4 - 8mm	864
136955	Duel Alto 56-59 X 78 - 8 mm	812

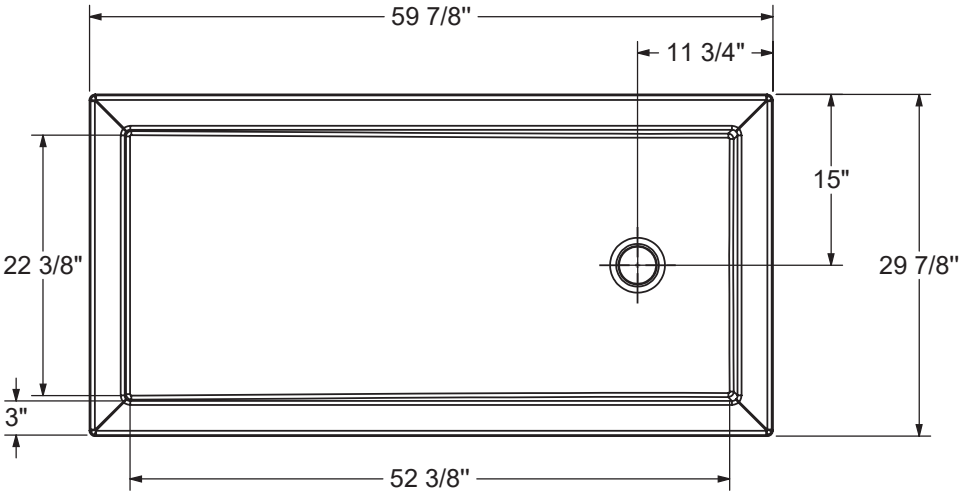

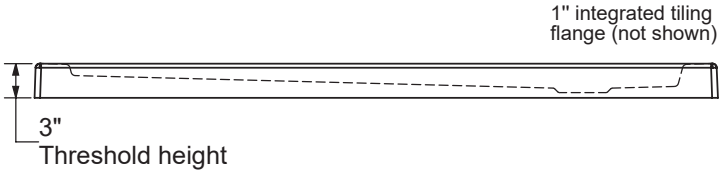

This technical drawing is universal for every 6030 configuration.

Integrated tiling flange : 1" height x 1/4" thick (not shown)
Tiling flange position is determined by chosen configuration.

All dimensions are approximate. Structure measurements must be verified against the unit to ensure proper fit.

B3Round 6032

Material : Acrylic

Features

- Model Size : 59 7/8 L in. X 31 7/8 W in. X 3 H in.
- Acrylic rectangular shower base with round drain
- Low 3 in. threshold base allowing an easy and safe access
- Certain configurations available with Stabili-T anti-slip bottom meeting ADA, ANSI or CSA
- Multiple configurations available to accomodate different types of installation
- Compatible with Utile, most glue-up shower walls and ceramic tiles
- Integrated leak proof tiling flanges
- 25-year warranty for peace of mind
- High gloss finish resistant to dulling, scratching, and fading

B3ROUND 6032 - 410005

SKU	Color	Configuration	Dimensions & Weight	Packaging	MSRP
410005-501-001-001	White	Left Drain / Alcove	59 7/8” x 31 7/8” x 3” / 55 lb	65.95 ft³	$ 1279
410005-501-001-002		Right Drain / Alcove			$ 1279
410005-502-001-001		Left Drain / Corner Left			$ 1279
410005-503-001-002		Right Drain / Corner Right			$ 1279
410005-504-001-000		Back End Drain / Alcove Deep			$ 1279
410005-505-001-001		Left Drain / Wall-mount			$ 1279
410005-505-001-002		Right Drain / Wall-mount			$ 1279
410005-506-001-104		Back End Drain / Tunnel			$ 1279
410005-541-001-001		Left Drain / Alcove - Stabili-T			$ 1279
410005-541-001-002		Right Drain / Alcove - Stabili-T			$ 1279
410005-542-001-001		Left Drain / Corner Left - Stabili-T			$ 1279
410005-543-001-002		Right Drain / Corner Right - Stabili-T			$ 1279

RECOMMENDED DOORS - VISIT OUR WEBSITE FOR A COMPLETE LIST OF RECOMMENDED DOORS

SKU	Product Name	Pag.
138997	Halo 56 ½-59 x 78 ¾ - 8mm	870
135322	Uptown 56-59 x 76 in. 8 mm	854
135324		876
135326	Uptown 57-59 x 76 in. 8 mm	907
135238	Connect Pro 57-58 ½ x 76 - 6mm	862
139580	Reveal Sleek 71 56-59 x 71 1/2 - 8mm	905
138541	Halo Pro GS 56 1/2-59 X 78 3/4 - 8mm	864
136955	Duel Alto 56-59 X 78 - 8 mm	812
136272	Duel 56-58 ½ x 70 ½ x 74 - 8 mm	829
139587	Capella 78 56-59 x 78 - 8mm	878
136672	Reveal 71 56-59 x 71 ½ - 8mm	901

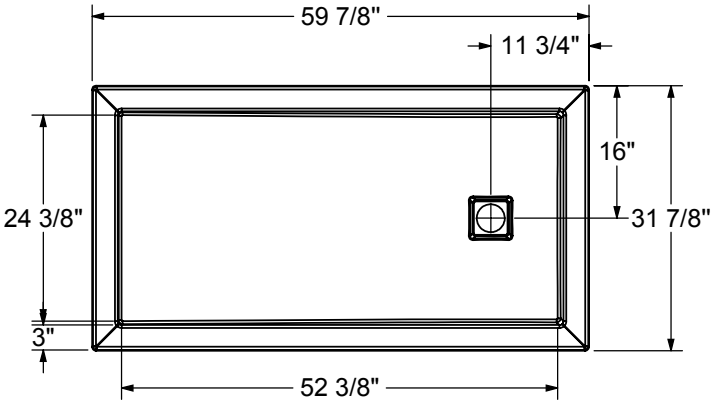

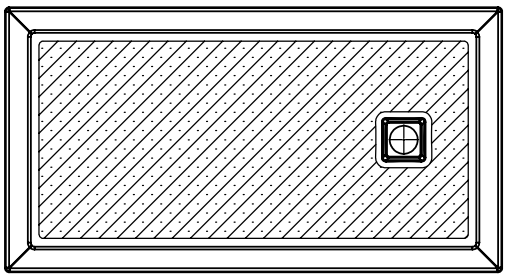

The hatched area represent the antislip surface

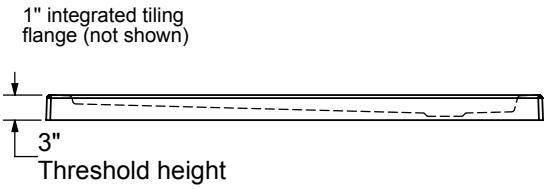

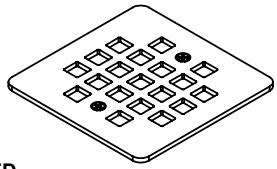

DRAIN INCLUDED ON B3 SQUARE ONLY

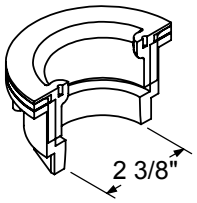

This technical drawing is universal for every 6032 configuration.

Integrated tiling flange : 1" height x 1/4" thick (not shown)
Tiling flange position is determined by chosen configuration.

All dimensions are approximate. Structure measurements must be verified against the unit to ensure proper fit.

B3Round 6034

Material : Acrylic

Features

- Model Size : 59 7/8 L in. X 33 7/8 W in. X 3 H in.
- Acrylic rectangular shower base with round drain
- Low 3 in. threshold base allowing an easy and safe access
- Certain configurations available with Stabili-T anti-slip bottom meeting ADA, ANSI or CSA
- Multiple configurations available to accomodate different types of installation
- Compatible with most glue-up Shower walls and ceramic tiles
- Integrated leak proof tiling flanges
- 25-year warranty for peace of mind
- High gloss finish resistant to dulling, scratching, and fading

B3ROUND 6034 - 410035

SKU	Color	Configuration	Dimensions & Weight	Packaging	MSRP
410035-541-001-000	White	Center Drain / Alcove - Stabili-T	59 7/8” x 33 7/8” x 3” / 57 lb	65.95 ft³	$ 1299
410035-541-001-001		Left Drain / Alcove - Stabili-T			$ 1299
410035-541-001-002		Right Drain / Alcove - Stabili-T			$ 1299
410035-542-001-000		Center Drain / Corner Left - Stabili-T			$ 1299
410035-542-001-001		Left Drain / Corner Left - Stabili-T			$ 1299
410035-543-001-000		Center Drain / Corner Right - Stabili-T			$ 1299
410035-543-001-002		Right Drain / Corner Right - Stabili-T			$ 1299

RECOMMENDED DOORS - VISIT OUR WEBSITE FOR A COMPLETE LIST OF RECOMMENDED DOORS

SKU	Product Name	Pag.
138997	Halo 56 ½-59 x 78 ¾ - 8mm	870
139580	Reveal Sleek 71 56-59 x 71 1/2 - 8mm	905
136272	Duel 56-58 ½ x 70 ½ x 74 - 8 mm	829
136672	Reveal 71 56-59 x 71 ½ - 8mm	901

The hatyched area represent the antislip surface

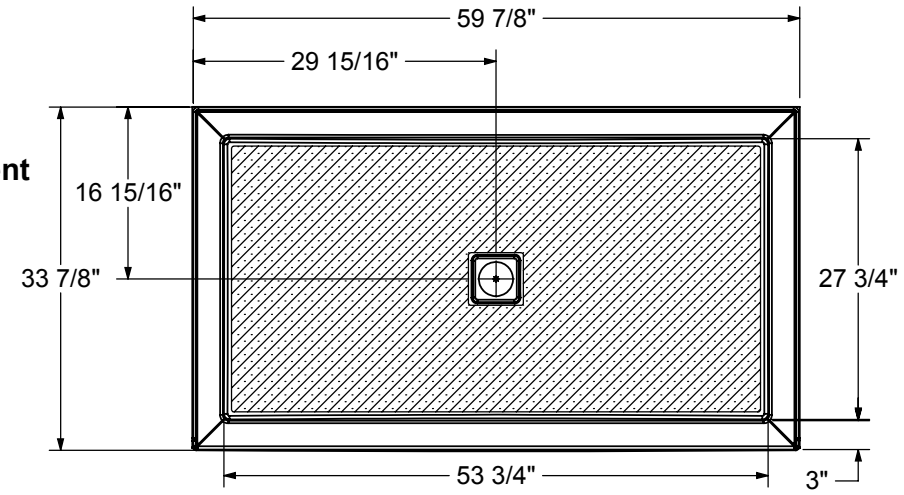

DRAIN INCLUDED ON B3 SQUARE ONLY

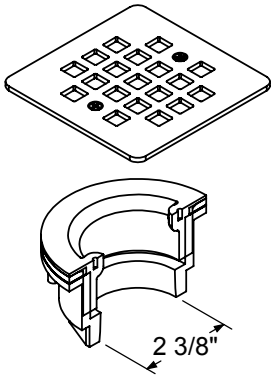

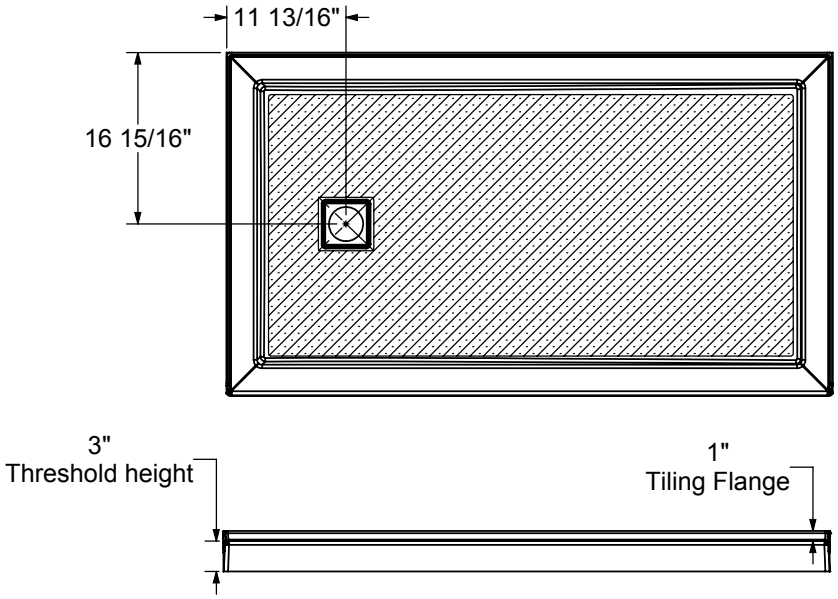

This technical drawing is universal for every 6034 configuration.

Integrated tiling flange : 1'' height x 1/4'' thick
Tiling flange position is determined by chosen configuration.

All dimensions are approximate. Structure measurements must be verified against the unit to ensure proper fit.

B3Round 6036

Material : Acrylic

Features

- Model Size : 59 7/8 L in. X 35 7/8 W in. X 3 H in.
- Acrylic rectangular shower base with round drain
- Low 3 in. threshold base allowing an easy and safe access
- Certain configurations available with Stabili-T anti-slip bottom meeting ADA, ANSI or CSA
- Multiple configurations available to accomodate different types of installation
- Compatible with Utile, most glue-up shower walls and ceramic tiles
- Integrated leak proof tiling flanges
- 25-year warranty for peace of mind
- High gloss finish resistant to dulling, scratching, and fading

B3ROUND 6036 - 410006

SKU	Color	Configuration	Dimensions & Weight	Packaging	MSRP
410006-501-001-000	White	Center Drain / Alcove	59 7/8” x 35 7/8” x 3” / 62 lb	65.95 ft³	$ 1320
410006-501-001-001		Left Drain / Alcove			$ 1320
410006-501-001-002		Right Drain / Alcove			$ 1320
410006-502-001-000		Center Drain / Corner Left			$ 1320
410006-502-001-001		Left Drain / Corner Left			$ 1320
410006-503-001-000		Center Drain / Corner Right			$ 1320
410006-503-001-002		Right Drain / Corner Right			$ 1320
410006-504-001-000		Back End Drain / Alcove Deep			$ 1320
410006-504-001-102		Center Drain / Alcove Deep			$ 1320
410006-505-001-000		Center Drain / Wall-mount			$ 1320
410006-505-001-001		Left Drain / Wall-mount			$ 1320
410006-505-001-002		Right Drain / Wall-mount			$ 1320
410006-506-001-000		Center Drain / Tunnel			$ 1320
410006-506-001-100		Back End Drain / Tunnel			$ 1320
410006-541-001-000		Center Drain / Alcove - Stabili-T			$ 1320
410006-541-001-001		Left Drain / Alcove - Stabili-T			$ 1320
410006-541-001-002		Right Drain / Alcove - Stabili-T			$ 1320
410006-542-001-000		Center Drain / Corner Left - Stabili-T			$ 1320
410006-542-001-001		Left Drain / Corner Left - Stabili-T			$ 1320
410006-543-001-000		Center Drain / Corner Right - Stabili-T			$ 1320
410006-543-001-002		Right Drain / Corner Right - Stabili-T			$ 1320

RECOMMENDED DOORS - VISIT OUR WEBSITE FOR A COMPLETE LIST OF RECOMMENDED DOORS

SKU	Product Name	Pag.
138997	Halo 56 ½-59 x 78 ¾ - 8mm	870
135322	Uptown 56-59 x 76 in. 8 mm	854
135324		876
135326	Uptown 57-59 x 76 in. 8 mm	907
135238	Connect Pro 57-58 ½ x 76 - 6mm	862
139580	Reveal Sleek 71 56-59 x 71 1/2 - 8mm	905
138541	Halo Pro GS 56 1/2-59 X 78 3/4 - 8mm	864
136955	Duel Alto 56-59 X 78 - 8 mm	812
136272	Duel 56-58 ½ x 70 ½ x 74 - 8 mm	829

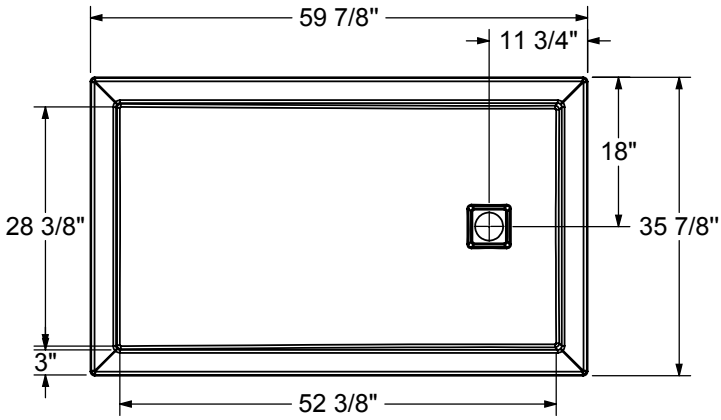

DRAIN INCLUDED ON B3 SQUARE ONLY

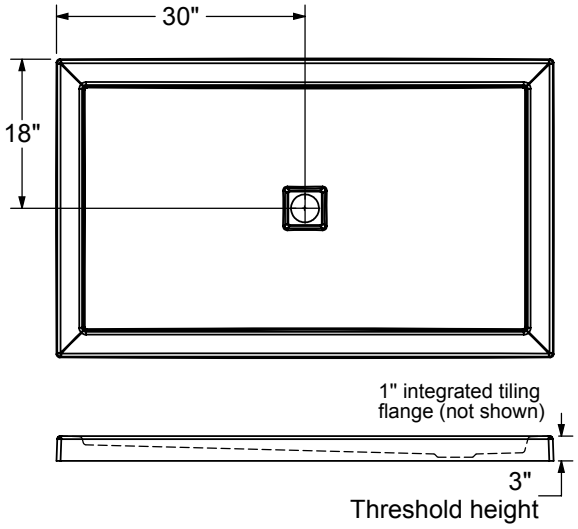

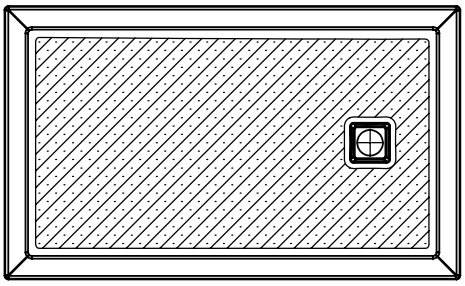

The hatched area represent the anti-slip surface

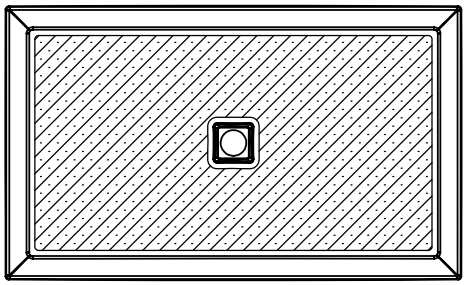

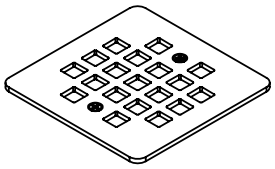

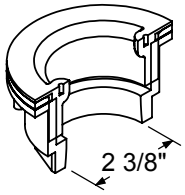

This technical drawing is universal for every 6036 configuration.

Integrated tiling flange : 1" height x 1/4" thick (not shown)
Tiling flange position is determined by chosen configuration.

All dimensions are approximate. Structure measurements must be verified against the unit to ensure proper fit.

Go to Table of Contents

B3Round 6042

Material : Acrylic

Features

- Model Size : 59 7/8 L in. X 41 7/8 W in. X 3 H in.
- Acrylic rectangular shower base with round drain
- Low 3 in. threshold base allowing an easy and safe access
- Certain configurations available with Stabili-T anti-slip bottom meeting ADA, ANSI or CSA
- Multiple configurations available to accomodate different types of installation
- Compatible with most glue-up Shower walls and ceramic tiles
- Integrated leak proof tiling flanges
- 25-year warranty for peace of mind
- High gloss finish resistant to dulling, scratching, and fading

B3ROUND 6042 - 410036

SKU	Color	Configuration	Dimensions & Weight	Packaging	MSRP
410036-541-001-000	White	Center Drain / Alcove - Stabili-T	59 7/8” x 41 7/8” x 3” / 59 lb	65.95 ft³	$ 1361
410036-542-001-000		Center Drain / Corner Left - Stabili-T			$ 1361
410036-543-001-000		Center Drain / Corner Right - Stabili-T			$ 1361

RECOMMENDED DOORS - VISIT OUR WEBSITE FOR A COMPLETE LIST OF RECOMMENDED DOORS

SKU	Product Name	Pag.
138277	Manhattan 57-59 x 68	893
138997	Halo 56 ½-59 x 78 ¾ - 8mm	870
139353	Incognito 70 56-59 x 70 1/2 in. 8mm Shower door	833
139350	Incognito 70 56-59 x 70 1/2 in. 6mm Shower door	831
135332	Incognito 76 Shaker 56-59 x 76 in. 8mm Shower Door	837
135335	Incognito 76 56-59 x 76 in. 8mm Shower Door	839
136335	Incognito 76 Smoke 56-59 x 76 - 8mm	841
135694	Revelation Square 56-59 x 70 ½-73 - 8mm	852
136691	Revelation Round 56-59 x 70 1/2-73	846
135691	Revelation Square 56-59 x 70 ½-73 - 6mm	850
136694	Revelation Round 56-59 x 70 ½-73 - 8mm	848
135322	Uptown 56-59 x 76 in. 8 mm	854
135324		876
135326	Uptown 57-59 x 76 in. 8 mm	907
135238	Connect Pro 57-58 ½ x 76 - 6mm	862
139580	Reveal Sleek 71 56-59 x 71 1/2 - 8mm	905
138956	Halo Pro TB 56 ½-59 x 78 ¾ - 8mm	868
138952	Halo Pro 56 ½-59 x 78 ¾ - 8mm	866
138541	Halo Pro GS 56 1/2-59 X 78 3/4 - 8mm	864
136955	Duel Alto 56-59 X 78 - 8 mm	812
136272	Duel 56-58 ½ x 70 ½ x 74 - 8 mm	829
138762	Inverto 56-59 x 70 ½-74 - 8mm	843
137420	Odyssey SC 57-59 1/2 x 78 - 8 mm	874
138475	Vela 56 ½-59 x 78 ¾ - 8mm	860
135875	Nebula 56 ½-58 ½ x 78 ¾ - 8mm	856
139587	Capella 78 56-59 x 78 - 8mm	878
137832	ModulR 60 x 78 - 8mm	882
134675	Kameleon SC 55-59 x 71 - 8mm	820

The hatyched area represent the antislip surface

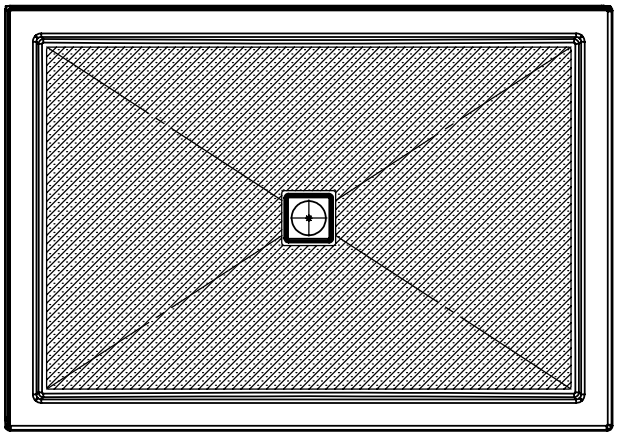

DRAIN INCLUDED ON B3 SQUARE ONLY

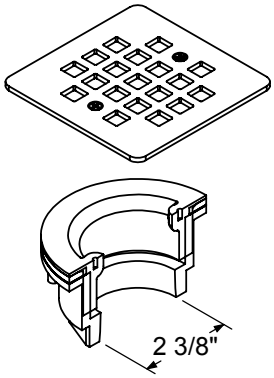

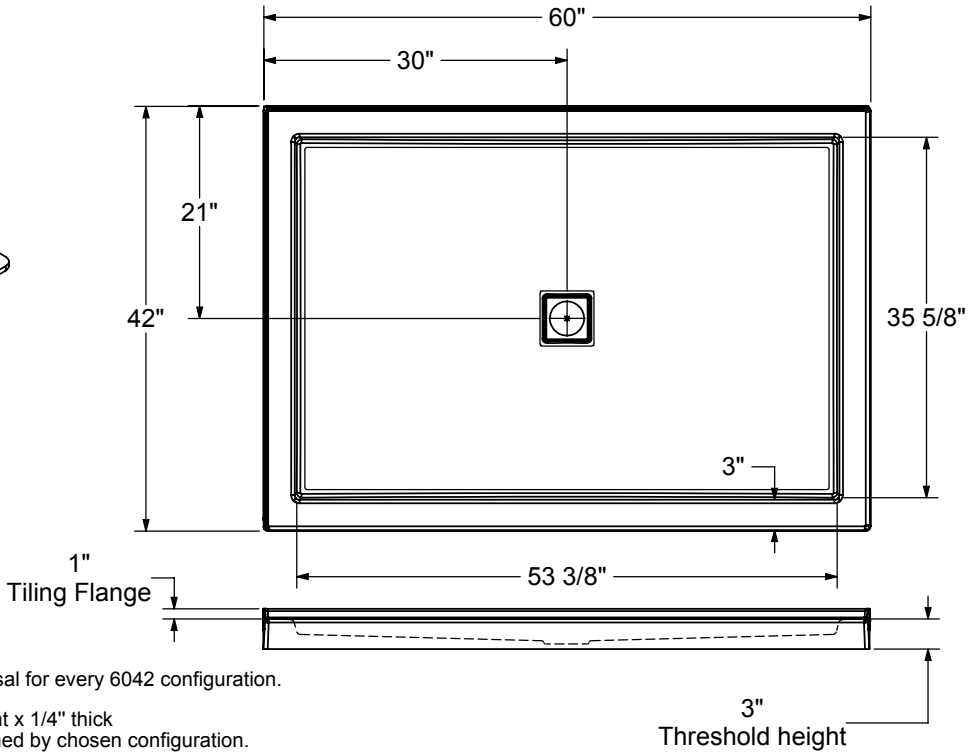

This technical drawing is universal for every 6042 configuration.

Integrated tiling flange : 1'' height x 1/4'' thick
Tiling flange position is determined by chosen configuration.

All dimensions are approximate. Structure measurements must be verified against the unit to ensure proper fit.

B3Square 3636

Material : Acrylic

Features

- Acrylic rectangular shower base with square drain
- Low 3 in. threshold base allowing an easy and safe access
- Certain configurations available with Stabili-T anti-slip bottom meeting ADA, ANSI or CSA
- Multiple configurations available to accomodate different types of installation
- Chrome grid and drain included (ABS or PVC available)
- Compatible with Utile, most glue-up shower walls and ceramic tiles
- Integrated leak proof tiling flanges
- Easy to clean and stain-resistant acrylic finish
- Complete drain assembly included for an easy installation

B3SQUARE 3636 - 420000

SKU	Color	Configuration	Dimensions & Weight	Packaging	MSRP
420000-500-001-100	White	Center Drain / Corner Left or Right	35 7/8” x 35 7/8” x 3” / 35 lb	48.98 ft³	$ 888
420000-501-001-100		Center Drain / Alcove			$ 888
420000-505-001-100		Center Drain / Wall-mount			$ 888
420000-540-001-100		Center Drain / Corner Left or Right - Stabili-T			$ 888
420000-541-001-100		Center Drain / Alcove - Stabili-T			$ 888

COMMON OPTIONS

SKU	Description	MSRP
OPT20253-340	ABS Square drain Available colors: Chrome **(084)**, Brushed Nickel **(305)**, Dark Bronze **(173)**, Matte Black **(340)** and Brushed gold **(343)**	$ 96
OPT20253-305		$ 59
OPT20253-343		$ 96
OPT20253-084		$ 0
OPT20253-173		$ 96
OPT20254-173	PVC Square drain Available colors: Chrome **(084)**, Brushed Nickel **(305)**, Dark Bronze **(173)**, Matte Black **(340)** and Brushed Gold **(343)**	$ 96
OPT20254-305		$ 59
OPT20254-340		$ 96
OPT20254-343		$ 96
OPT20254-084		$ 0
OPT20208-084	PVC drain to respect National Building Code of Canada (CAN/ULC-S102.2 flame and smoke protection) for high rise construction (included in product packaging) Available color: Chrome **(084)**	$ 97

ACCESSORIES

SKU	Description	MSRP
10029133-084	PVC drain to respect National Building Code of Canada (CAN/ULC-S102.2 flame and smoke protection) for high rise construction (sold separately - grid not included) Available color: Chrome **(084)**	$ 97
10038458-305-600	Square drain grid Available colors: White **(001)**Chrome **(084)**, Dark Bronze **(173)**, Brushed Nickel **(305)**, Matte Black **(340)** and Brushed Gold **(343)**	$ 59
10038458-084-600		$ 59
10038458-173-600		$ 96
10038458-340-600		$ 96
10038458-001-600		$ 96
10038458-343-600		$ 96

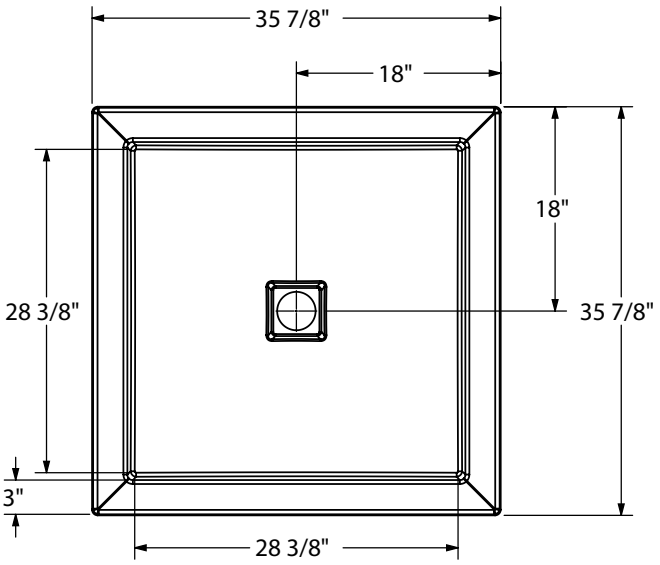

DRAIN INCLUDED
ON B3 SQUARE ONLY

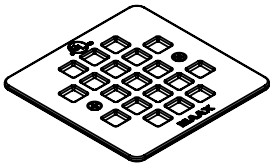

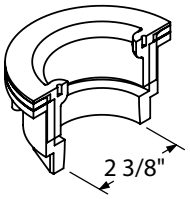

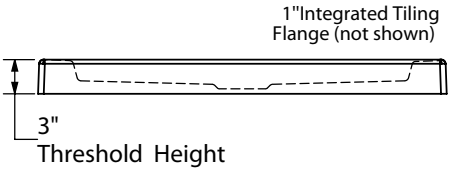

This technical drawing is universal for every 3636 configuration.

Integrated tiling flange : 1" height x 1/4" thick (not shown)
Tiling flange position is determined by chosen configuration.

All dimensions are approximate. Structure measurements
must be verified against the unit to ensure proper fit.

B3Square 4236

Material : Acrylic

Features

- Acrylic rectangular shower base with square drain
- Low 3 in. threshold base allowing an easy and safe access
- Certain configurations available with Stabili-T anti-slip bottom meeting ADA, ANSI or CSA
- Multiple configurations available to accomodate different types of installation
- Chrome grid and drain included (ABS or PVC available)
- Compatible with most glue-up Shower walls and ceramic tiles
- Integrated leak proof tiling flanges
- Easy to clean and stain-resistant acrylic finish
- Inclus la quincaillerie de drain pour une installation facile

B3SQUARE 4236 - 420034

SKU	Color	Configuration	Dimensions & Weight	Packaging	MSRP
420034-501-001-100	White	Center Drain / Alcove	41 7/8” x 35 7/8” x 3” / 45 lb	46.2 ft³	$ 1103
420034-502-001-100		Center Drain / Corner Left			$ 1103
420034-503-001-100		Center Drain / Corner Right			$ 1103
420034-541-001-100		Center Drain / Alcove - Stabili-T			$ 1103
420034-542-001-100		Center Drain / Corner Left - Stabili-T			$ 1103
420034-543-001-100		Center Drain / Corner Right - Stabili-T			$ 1103

COMMON OPTIONS

SKU	Description	MSRP
OPT20208-084	PVC drain to respect National Building Code of Canada (CAN/ULC-S102.2 flame and smoke protection) for high rise construction (included in product packaging) Available color: Chrome **(084)**	$ 97
OPT20253-340	ABS Square drain Available colors: Chrome **(084)**, Brushed Nickel **(305)**, Dark Bronze **(173)**, Matte Black **(340)** and Brushed gold **(343)**	$ 96
OPT20253-305		$ 59
OPT20253-343		$ 96
OPT20253-084		$ 0
OPT20253-173		$ 96
OPT20254-173	PVC Square drain Available colors: Chrome **(084)**, Brushed Nickel **(305)**, Dark Bronze **(173)**, Matte Black **(340)** and Brushed Gold **(343)**	$ 96
OPT20254-305		$ 59
OPT20254-340		$ 96
OPT20254-343		$ 96
OPT20254-084		$ 0

ACCESSORIES

SKU	Description	MSRP
10029133-084	PVC drain to respect National Building Code of Canada (CAN/ULC-S102.2 flame and smoke protection) for high rise construction (sold separately - grid not included) Available color: Chrome **(084)**	$ 97
10038458-305-600	Square drain grid Available colors: White **(001)**Chrome **(084)**, Dark Bronze **(173)**, Brushed Nickel **(305)**, Matte Black **(340)** and Brushed Gold **(343)**	$ 59
10038458-084-600		$ 59
10038458-173-600		$ 96
10038458-340-600		$ 96
10038458-001-600		$ 96
10038458-343-600		$ 96

The hatched area represent the antislip surface

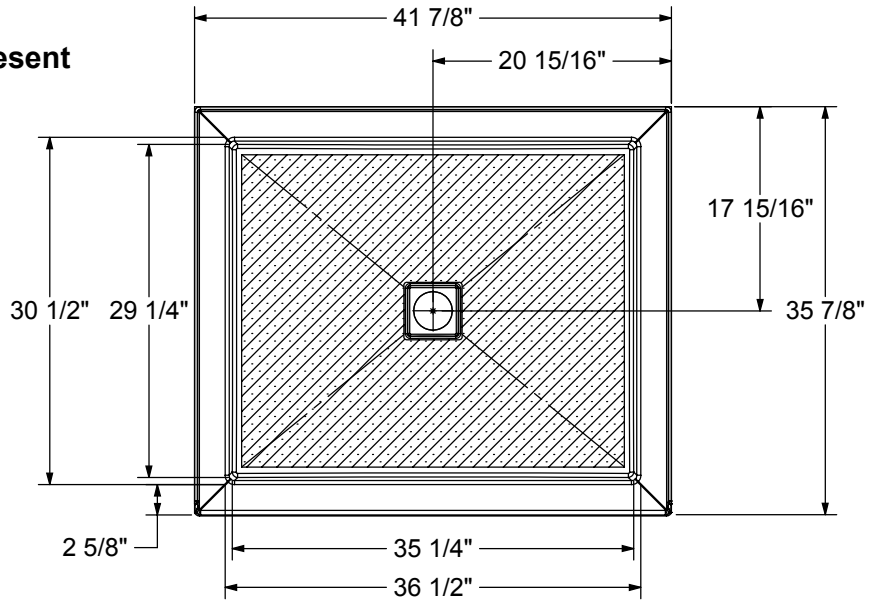

DRAIN INCLUDED ON B3 SQUARE ONLY

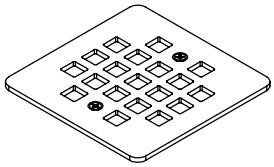

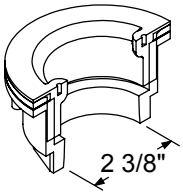

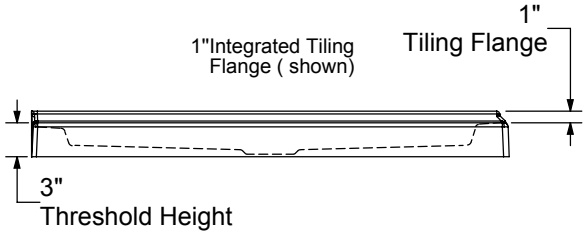

This technical drawing is universal for every 4236 configuration.

Integrated tiling flange : 1" height x 1/4" thick
Tiling flange position is determined by chosen configuration.

All dimensions are approximate. Structure measurements must be verified against the unit to ensure proper fit.

B3Square 4832

Material : Acrylic

Features

- Acrylic rectangular shower base with square drain
- Low 3 in. threshold base allowing an easy and safe access
- Certain configurations available with Stabili-T anti-slip bottom meeting ADA, ANSI or CSA
- Multiple configurations available to accomodate different types of installation
- Chrome grid and drain included (ABS or PVC available)
- Compatible with Utile, most glue-up shower walls and ceramic tiles
- Integrated leak proof tiling flanges
- Easy to clean and stain-resistant acrylic finish
- Complete drain assembly included for an easy installation

B3SQUARE 4832 - 420001

SKU	Color	Configuration	Dimensions & Weight	Packaging	MSRP
420001-501-001-100	White	Center Drain / Alcove	47 7/8” x 31 7/8” x 3” / 41 lb	65.37 ft³	$ 1103
420001-502-001-100		Center Drain / Corner Left			$ 1103
420001-503-001-100		Center Drain / Corner Right			$ 1103
420001-504-001-100		Center Drain / Alcove Deep			$ 1103
420001-505-001-100		Center Drain / Wall-mount			$ 1103
420001-506-001-100		Center Drain / Tunnel			$ 1103
420001-541-001-100		Center Drain / Alcove - Stabili-T			$ 1103
420001-542-001-100		Center Drain / Corner Left - Stabili-T			$ 1103
420001-543-001-100		Center Drain / Corner Right - Stabili-T			$ 1103

COMMON OPTIONS

SKU	Description	MSRP
OPT20253-340	ABS Square drain Available colors: Chrome **(084)**, Brushed Nickel **(305)**, Dark Bronze **(173)**, Matte Black **(340)** and Brushed gold **(343)**	$ 96
OPT20253-305		$ 59
OPT20253-343		$ 96
OPT20253-084		$ 0
OPT20253-173		$ 96
OPT20254-173	PVC Square drain Available colors: Chrome **(084)**, Brushed Nickel **(305)**, Dark Bronze **(173)**, Matte Black **(340)** and Brushed Gold **(343)**	$ 96
OPT20254-305		$ 59
OPT20254-340		$ 96
OPT20254-343		$ 96
OPT20254-084		$ 0
OPT20208-084	PVC drain to respect National Building Code of Canada (CAN/ULC-S102.2 flame and smoke protection) for high rise construction (included in product packaging) Available color: Chrome **(084)**	$ 97

ACCESSORIES

SKU	Description	MSRP
10029133-084	PVC drain to respect National Building Code of Canada (CAN/ULC-S102.2 flame and smoke protection) for high rise construction (sold separately - grid not included) Available color: Chrome **(084)**	$ 97
10038458-305-600	Square drain grid Available colors: White **(001)**Chrome **(084)**, Dark Bronze **(173)**, Brushed Nickel **(305)**, Matte Black **(340)** and Brushed Gold **(343)**	$ 59

ACCESSORIES

SKU	Description	MSRP
10038458-084-600	Square drain grid Available colors: White **(001)**Chrome **(084)**, Dark Bronze **(173)**, Brushed Nickel **(305)**, Matte Black **(340)** and Brushed Gold **(343)**	$ 59
10038458-173-600		$ 96
10038458-340-600		$ 96
10038458-001-600		$ 96
10038458-343-600		$ 96

RECOMMENDED DOORS - VISIT OUR WEBSITE FOR A COMPLETE LIST OF RECOMMENDED DOORS

SKU	Product Name	Pag.
135321	Uptown 44-47 x 76 in. 8 mm	854
138950	Halo Pro 44 ½-47 x 78 ¾ - 8mm	866
135334	Incognito 76 44-47 x 76 in. 8mm Shower Door	839
139352	Incognito 70 44-47 x 70 1/2 in. 8mm Shower Door	833
139349	Incognito 70 44-47 x 70 1/2 in. 6mm Shower Door	831
138460	Vela 44 ½-47 x 78 ¾ - 8mm	858
136693	Revelation Round 44-47 x 70 ½-73 - 8mm	848
135690	Revelation Square 44-47 x 70 ½-73 - 6mm	850
134563	Kameleon 43-47 x 71 - 6mm	822
135323	Uptown 44-47 x 76 in. 8 mm	876
135325	Uptown 45-47 x 76 in. 8 mm	907
134663	Kameleon SC 43-47 x 71 - 6mm	818
139578	Reveal Sleek 71 44-47 x 71 1/2 - 8mm	904
134571	Kameleon 43-47 x 71 - 8mm	827
135870	Nebula 44 ½-46 ½ x 78 ¾ - 8mm	856
138954	Halo Pro TB 44 ½-47 x 78 ¾ - 8mm	868
135331	Incognito 76 Shaker 44-47 x 76 in. 8mm Shower Door	837
136271	Duel 44-47 x 70 1/2-74	829
137421	Odyssey SC 45-47 1/2 x 78 - 8 mm	874
136956	Duel Alto 44-47 X 78 - 8 mm	812
138761	Inverto 43-47 x 70 ½-74 - 8mm	843
139586	Capella 78 44-47 x 78 - 8mm	878
138465	Vela 44 ½-47 x 78 ¾ - 8mm	860
134674	Kameleon SC 43-47 x 71 - 8mm	820
135693	Revelation Square 44-47 x 70 ½-73 - 8mm	852
138996	Halo 44 ½-47 x 78 ¾ - 8mm	870
138992	Luminescence 44 ½-47 x 70 ½-72 - 6mm	872
136671	Reveal 71 44-47 x 71 ½ - 8mm	901
105413	Polar 42-47 ½ x 68 in.	845
138271	Manhattan 45-47 x 68	892
136690	Revelation Round 44-47 x 70 1/2-73	846
138540	Halo Pro GS 44 1/2-47 X 78 3/4 - 8mm	864
135236	Connect Pro 45-46 ½ x 76 - 6mm	862

Go to Table of Contents

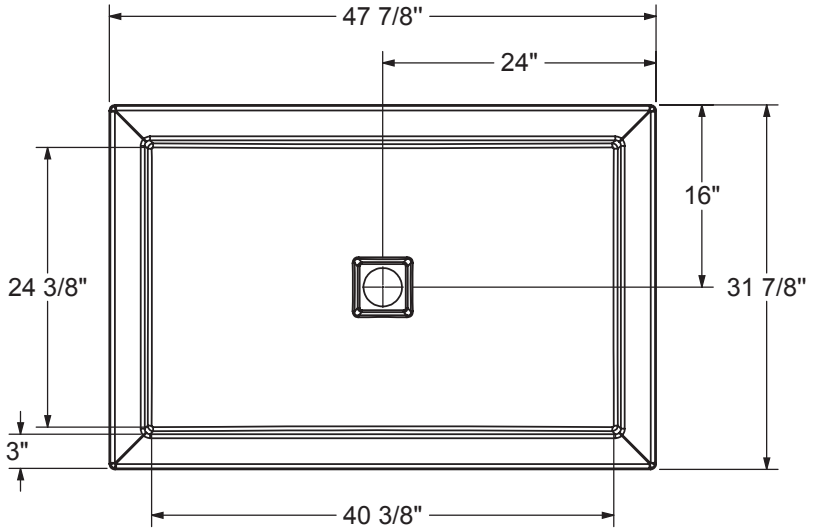

DRAIN INCLUDED ON B3 SQUARE ONLY

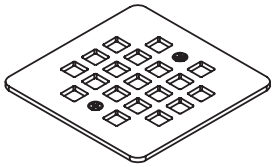

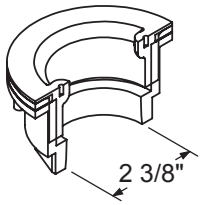

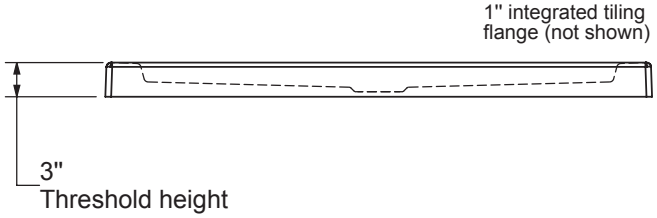

This technical drawing is universal for every 4832 configuration.

Integrated tiling flange : 1" height x 1/4" thick (not shown)
Tiling flange position is determined by chosen configuration.

All dimensions are approximate. Structure measurements must be verified against the unit to ensure proper fit.

B3Square 4834

Material : Acrylic

Features

- Acrylic rectangular shower base with square drain
- Low 3 in. threshold base allowing an easy and safe access
- Certain configurations available with Stabili-T anti-slip bottom meeting ADA, ANSI or CSA
- Multiple configurations available to accomodate different types of installation
- Chrome grid and drain included (ABS or PVC available)
- Compatible with most glue-up Shower walls and ceramic tiles
- Integrated leak proof tiling flanges
- Easy to clean and stain-resistant acrylic finish
- Inclus la quincaillerie de drain pour une installation facile

B3SQUARE 4834 - 420002

SKU	Color	Configuration	Dimensions & Weight	Packaging	MSRP
420002-501-001-100	White	Center Drain / No Seat Seat / Alcove	47 7/8” x 33 7/8” x 3” / 44 lb	65.37 ft³	$ 1125
420002-502-001-100		Center Drain / No Seat Seat / Corner Left			$ 1125
420002-503-001-100		Center Drain / No Seat Seat / Corner Right			$ 1125
420002-504-001-100		Center Drain / Alcove Deep			$ 1125
420002-505-001-100		Center Drain / Wall-mount			$ 1125
420002-506-001-100		Center Drain / Tunnel			$ 1125
420002-541-001-100		Center Drain / Alcove - Stabili-T			$ 1125
420002-542-001-100		Center Drain / Corner Left - Stabili-T			$ 1125
420002-543-001-100		Center Drain / Corner Right - Stabili-T			$ 1125

COMMON OPTIONS

SKU	Description	MSRP
OPT20253-340	ABS Square drain Available colors: Chrome **(084)**, Brushed Nickel **(305)**, Dark Bronze **(173)**, Matte Black **(340)** and Brushed gold **(343)**	$ 96
OPT20253-305		$ 59
OPT20253-343		$ 96
OPT20253-084		$ 0
OPT20253-173		$ 96
OPT20208-084	PVC drain to respect National Building Code of Canada (CAN/ULC-S102.2 flame and smoke protection) for high rise construction (included in product packaging) Available color: Chrome **(084)**	$ 97
OPT20254-173	PVC Square drain Available colors: Chrome **(084)**, Brushed Nickel **(305)**, Dark Bronze **(173)**, Matte Black **(340)** and Brushed Gold **(343)**	$ 96
OPT20254-305		$ 59
OPT20254-340		$ 96
OPT20254-343		$ 96
OPT20254-084		$ 0

ACCESSORIES

SKU	Description	MSRP
10038458-305-600	Square drain grid Available colors: White **(001)**Chrome **(084)**, Dark Bronze **(173)**, Brushed Nickel **(305)**, Matte Black **(340)** and Brushed Gold **(343)**	$ 59
10038458-084-600		$ 59
10038458-173-600		$ 96
10038458-340-600		$ 96
10038458-001-600		$ 96
10038458-343-600		$ 96

ACCESSORIES

SKU	Description	MSRP
10029133-084	PVC drain to respect National Building Code of Canada (CAN/ULC-S102.2 flame and smoke protection) for high rise construction (sold separately - grid not included) Available color: Chrome **(084)**	$ 97

RECOMMENDED DOORS - VISIT OUR WEBSITE FOR A COMPLETE LIST OF RECOMMENDED DOORS

SKU	Product Name	Pag.
135321	Uptown 44-47 x 76 in. 8 mm	854
138950	Halo Pro 44 ½-47 x 78 ¾ - 8mm	866
135334	Incognito 76 44-47 x 76 in. 8mm Shower Door	839
139352	Incognito 70 44-47 x 70 1/2 in. 8mm Shower Door	833
139349	Incognito 70 44-47 x 70 1/2 in. 6mm Shower Door	831
138460	Vela 44 ½-47 x 78 ¾ - 8mm	858
136693	Revelation Round 44-47 x 70 ½-73 - 8mm	848
135690	Revelation Square 44-47 x 70 ½-73 - 6mm	850
134563	Kameleon 43-47 x 71 - 6mm	822
135323	Uptown 44-47 x 76 in. 8 mm	876
135325	Uptown 45-47 x 76 in. 8 mm	907
134663	Kameleon SC 43-47 x 71 - 6mm	818
139578	Reveal Sleek 71 44-47 x 71 1/2 - 8mm	904
134571	Kameleon 43-47 x 71 - 8mm	827
135870	Nebula 44 ½-46 ½ x 78 ¾ - 8mm	856
138954	Halo Pro TB 44 ½-47 x 78 ¾ - 8mm	868
135331	Incognito 76 Shaker 44-47 x 76 in. 8mm Shower Door	837
136271	Duel 44-47 x 70 1/2-74	829
137421	Odyssey SC 45-47 1/2 x 78 - 8 mm	874
136956	Duel Alto 44-47 X 78 - 8 mm	812
138761	Inverto 43-47 x 70 ½-74 - 8mm	843
139586	Capella 78 44-47 x 78 - 8mm	878
138465	Vela 44 ½-47 x 78 ¾ - 8mm	860
134674	Kameleon SC 43-47 x 71 - 8mm	820
135693	Revelation Square 44-47 x 70 ½-73 - 8mm	852
138996	Halo 44 ½-47 x 78 ¾ - 8mm	870
138992	Luminescence 44 ½-47 x 70 ½-72 - 6mm	872
136671	Reveal 71 44-47 x 71 ½ - 8mm	901
105413	Polar 42-47 ½ x 68 in.	845
138271	Manhattan 45-47 x 68	892
136690	Revelation Round 44-47 x 70 1/2-73	846
138540	Halo Pro GS 44 1/2-47 X 78 3/4 - 8mm	864
135236	Connect Pro 45-46 ½ x 76 - 6mm	862

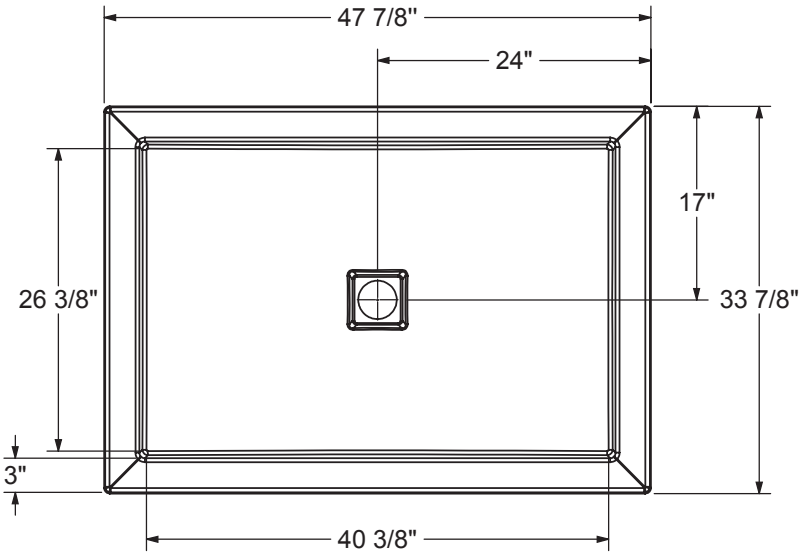

DRAIN INCLUDED ON B3 SQUARE ONLY

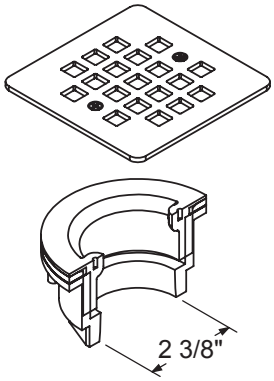

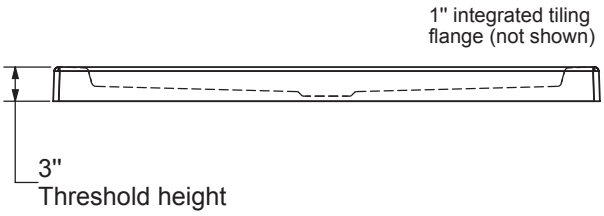

This technical drawing is universal for every 4834 configuration.

Integrated tiling flange : 1" height x 1/4" thick (not shown)
Tiling flange position is determined by chosen configuration.

All dimensions are approximate. Structure measurements must be verified against the unit to ensure proper fit.

B3Square 4836

Material : Acrylic

Features

B3SQUARE 4836 - 420003

SKU	Color	Configuration	Dimensions & Weight	Packaging	MSRP
420003-501-001-100	White	Center Drain / Alcove	47 7/8” x 35 7/8” x 3” / 47 lb	65.37 ft^3	$ 1146
420003-502-001-100		Center Drain / Corner Left			$ 1146
420003-503-001-100		Center Drain / Corner Right			$ 1146
420003-504-001-100		Center Drain / Alcove Deep			$ 1146
420003-505-001-100		Center Drain / Wall-mount			$ 1146
420003-506-001-100		Center Drain / Tunnel			$ 1146
420003-541-001-100		Center Drain / Alcove - Stabili-T			$ 1146
420003-542-001-100		Center Drain / Corner Left - Stabili-T			$ 1146
420003-543-001-100		Center Drain / Corner Right - Stabili-T			$ 1146

COMMON OPTIONS

SKU	Description	MSRP
OPT20253-340	ABS Square drain Available colors: Chrome **(084)**, Brushed Nickel **(305)**, Dark Bronze **(173)**, Matte Black **(340)** and Brushed gold **(343)**	$ 96
OPT20253-305		$ 59
OPT20253-343		$ 96
OPT20253-084		$ 0
OPT20253-173		$ 96
OPT20208-084	PVC drain to respect National Building Code of Canada (CAN/ULC-S102.2 flame and smoke protection) for high rise construction (included in product packaging) Available color: Chrome **(084)**	$ 97
OPT20254-173	PVC Square drain Available colors: Chrome **(084)**, Brushed Nickel **(305)**, Dark Bronze **(173)**, Matte Black **(340)** and Brushed Gold **(343)**	$ 96
OPT20254-305		$ 59
OPT20254-340		$ 96
OPT20254-343		$ 96
OPT20254-084		$ 0

ACCESSORIES

SKU	Description	MSRP
10038458-305-600	Square drain grid Available colors: White **(001)**Chrome **(084)**, Dark Bronze **(173)**, Brushed Nickel **(305)**, Matte Black **(340)** and Brushed Gold **(343)**	$ 59
10038458-084-600		$ 59
10038458-173-600		$ 96
10038458-340-600		$ 96
10038458-001-600		$ 96
10038458-343-600		$ 96
10029133-084	PVC drain to respect National Building Code of Canada (CAN/ULC-S102.2 flame and smoke protection) for high rise construction (sold separately - grid not included) Available color: Chrome **(084)**	$ 97

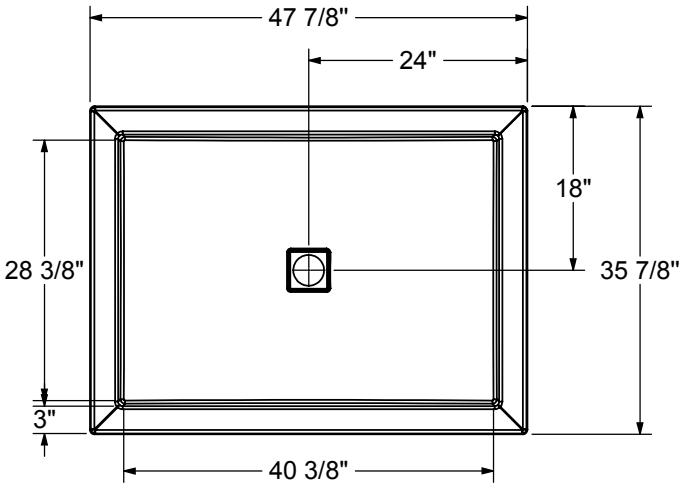

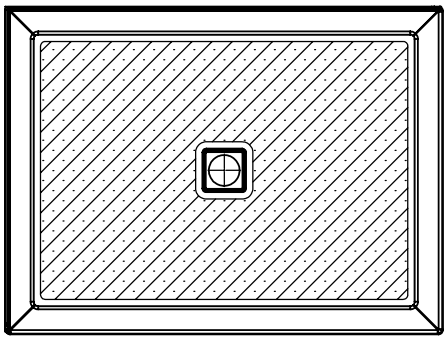

The hatched area represent the anti-slip surface

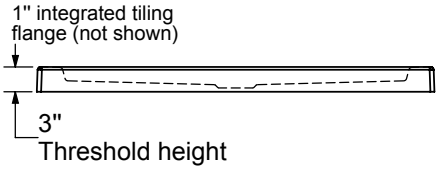

DRAIN INCLUDED ON B3 SQUARE ONLY

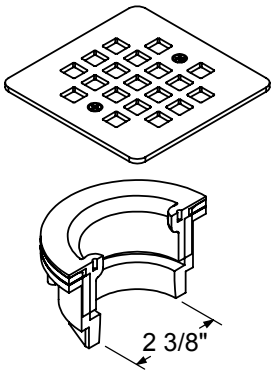

This technical drawing is universal for every 4836 configuration.

Integrated tiling flange : 1" height x 1/4" thick (not shown)
Tiling flange position is determined by chosen configuration.

All dimensions are approximate. Structure measurements must be verified against the unit to ensure proper fit.

B3Square 4842

Material : Acrylic

Features

- Acrylic rectangular shower base with square drain
- Low 3 in. threshold base allowing an easy and safe access
- Certain configurations available with Stabili-T anti-slip bottom meeting ADA, ANSI or CSA
- Multiple configurations available to accomodate different types of installation
- Chrome grid and drain included (ABS or PVC available)
- Compatible with most glue-up Shower walls and ceramic tiles
- Integrated leak proof tiling flanges
- Easy to clean and stain-resistant acrylic finish
- High gloss finish resistant to dulling, scratching, and fading

B3SQUARE 4842 - 420043

SKU	Color	Configuration	Dimensions & Weight	Packaging	MSRP
420043-541-001-100	White	Center Drain / Alcove - Stabili-T	47 7/8” x 41 7/8” x 3” / 56 lb	4.64 ft^3	$ 1246
420043-542-001-100		Center Drain / Corner Left - Stabili-T			$ 1246
420043-543-001-100		Center Drain / Corner Right - Stabili-T			$ 1246
420043-544-001-100		Center Drain / Alcove Deep - Stabili-T			$ 1246

COMMON OPTIONS

SKU	Description	MSRP
OPT20253-340	ABS Square drain Available colors: Chrome **(084)**, Brushed Nickel **(305)**, Dark Bronze **(173)**, Matte Black **(340)** and Brushed gold **(343)**	$ 96
OPT20253-305		$ 59
OPT20253-343		$ 96
OPT20253-084		$ 0
OPT20253-173		$ 96
OPT20208-084	PVC drain to respect National Building Code of Canada (CAN/ULC-S102.2 flame and smoke protection) for high rise construction (included in product packaging) Available color: Chrome **(084)**	$ 97
OPT20254-173	PVC Square drain Available colors: Chrome **(084)**, Brushed Nickel **(305)**, Dark Bronze **(173)**, Matte Black **(340)** and Brushed Gold **(343)**	$ 96
OPT20254-305		$ 59
OPT20254-340		$ 96
OPT20254-343		$ 96
OPT20254-084		$ 0

ACCESSORIES

SKU	Description	MSRP
10038458-305-600	Square drain grid Available colors: White **(001)**Chrome **(084)**, Dark Bronze **(173)**, Brushed Nickel **(305)**, Matte Black **(340)** and Brushed Gold **(343)**	$ 59
10038458-084-600		$ 59
10038458-173-600		$ 96
10038458-340-600		$ 96
10038458-001-600		$ 96
10038458-343-600		$ 96
10029133-084	PVC drain to respect National Building Code of Canada (CAN/ULC-S102.2 flame and smoke protection) for high rise construction (sold separately - grid not included) Available color: Chrome **(084)**	$ 97

RECOMMENDED DOORS - VISIT OUR WEBSITE FOR A COMPLETE LIST OF RECOMMENDED DOORS

SKU	Product Name	Pag.
138996	Halo 44 ½-47 x 78 ¾ - 8mm	870

Go to Table of Contents

BASE MODEL

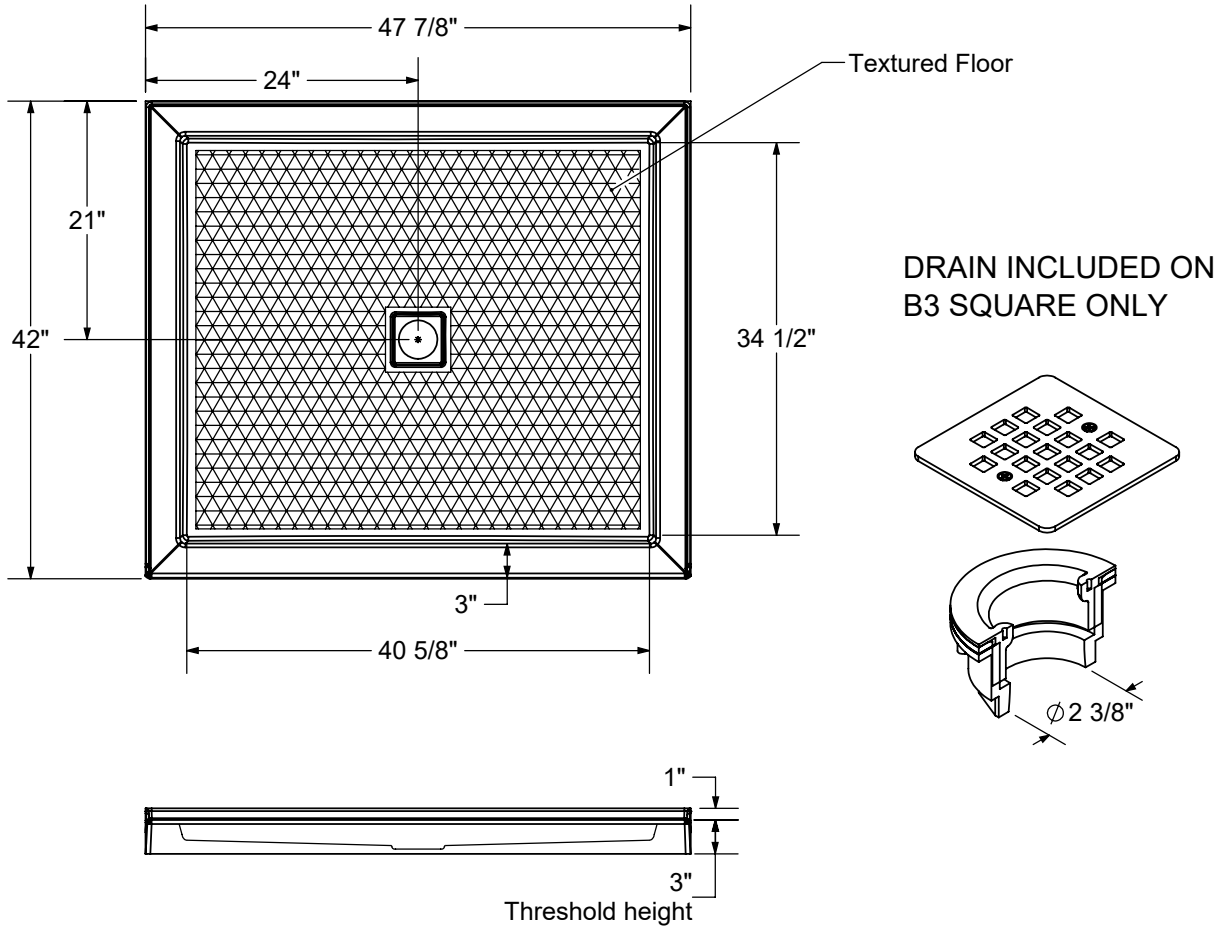

- **All dimensions are approximate**
- **Structure measurements must be verified against the unit to ensure proper fit**
- **Installation to be completed in accordance with manufacturers specifications**
- **Do not scale drawings**

B3Square 6030

Material : Acrylic

Features

- Acrylic rectangular shower base with square drain
- Low 3 in. threshold base allowing an easy and safe access
- Certain configurations available with Stabili-T anti-slip bottom meeting ADA, ANSI or CSA
- Multiple configurations available to accomodate different types of installation
- Chrome grid and drain included (ABS or PVC available)
- Compatible with most glue-up Shower walls and ceramic tiles
- Integrated leak proof tiling flanges
- Easy to clean and stain-resistant acrylic finish
- Inclus la quincaillerie de drain pour une installation facile

B3SQUARE 6030 - 420004

SKU	Color	Configuration	Dimensions & Weight	Packaging	MSRP
420004-501-001-100	White	Left Drain / Alcove	59 7/8” x 29 7/8” x 3” / 52 lb	81.75 ft^3	$ 1358
420004-501-001-101		Right Drain / No Seat Seat / Alcove			$ 1358
420004-502-001-100		Left Drain / No Seat Seat / Corner Left			$ 1358
420004-503-001-100		Right Drain / Corner Right			$ 1358
420004-504-001-100		Back End Drain / Alcove Deep			$ 1358
420004-505-001-100		Left Drain / Wall-mount			$ 1358
420004-505-001-101		Right Drain / Wall-mount			$ 1358
420004-541-001-100		Left Drain / Alcove - Stabili-T			$ 1358
420004-541-001-101		Right Drain / Alcove - Stabili-T			$ 1358
420004-542-001-100		Left Drain / Corner Left - Stabili-T			$ 1358
420004-543-001-100		Right Drain / Corner Right - Stabili-T			$ 1358

COMMON OPTIONS

SKU	Description	MSRP
OPT20253-340	ABS Square drain Available colors: Chrome **(084)**, Brushed Nickel **(305)**, Dark Bronze **(173)**, Matte Black **(340)** and Brushed gold **(343)**	$ 96
OPT20253-305		$ 59
OPT20253-343		$ 96
OPT20253-084		$ 0
OPT20253-173		$ 96
OPT20254-173	PVC Square drain Available colors: Chrome **(084)**, Brushed Nickel **(305)**, Dark Bronze **(173)**, Matte Black **(340)** and Brushed Gold **(343)**	$ 96
OPT20254-305		$ 59
OPT20254-340		$ 96
OPT20254-343		$ 96
OPT20254-084		$ 0
OPT20208-084	PVC drain to respect National Building Code of Canada (CAN/ULC-S102.2 flame and smoke protection) for high rise construction (included in product packaging) Available color: Chrome **(084)**	$ 97

ACCESSORIES

SKU	Description	MSRP
10038458-305-600	Square drain grid Available colors: White **(001)**Chrome **(084)**, Dark Bronze **(173)**, Brushed Nickel **(305)**, Matte Black **(340)** and Brushed Gold **(343)**	$ 59
10038458-084-600		$ 59
10038458-173-600		$ 96
10038458-340-600		$ 96

ACCESSORIES

SKU	Description	MSRP
10038458-001-600	Square drain grid Available colors: White **(001)**Chrome **(084)**, Dark Bronze **(173)**, Brushed Nickel **(305)**, Matte Black **(340)** and Brushed Gold **(343)**	$ 96
10038458-343-600		$ 96
10029133-084	PVC drain to respect National Building Code of Canada (CAN/ULC-S102.2 flame and smoke protection) for high rise construction (sold separately - grid not included) Available color: Chrome **(084)**	$ 97

RECOMMENDED DOORS - VISIT OUR WEBSITE FOR A COMPLETE LIST OF RECOMMENDED DOORS

SKU	Product Name	Pag.
138997	Halo 56 ½-59 x 78 ¾ - 8mm	870

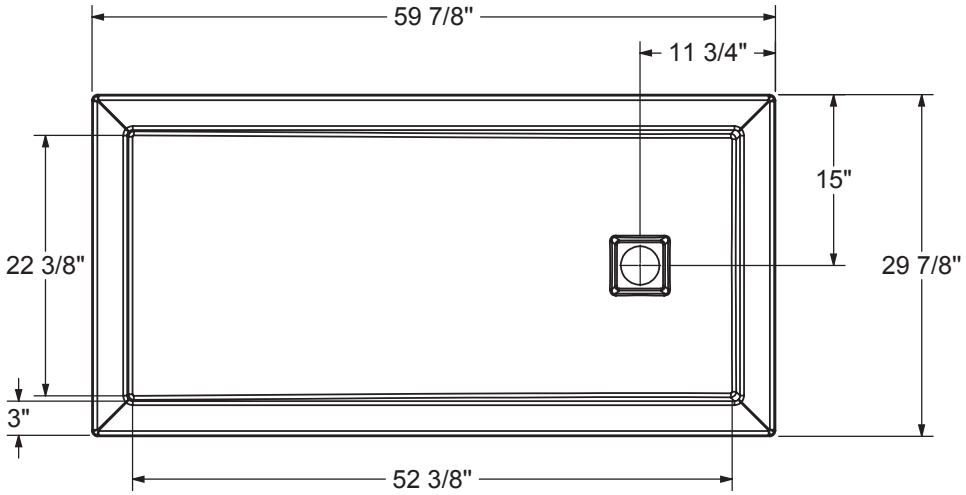

DRAIN INCLUDED FOR B3 SQUARE ONLY

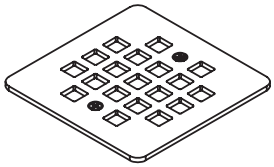

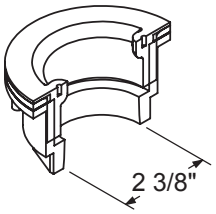

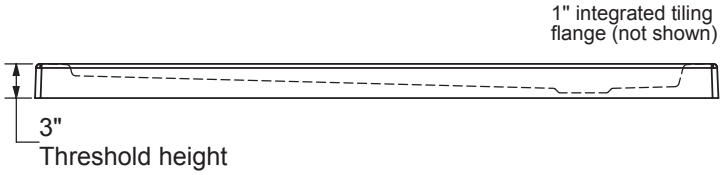

This technical drawing is universal for every 6030 configuration.

Integrated tiling flange : 1" height x 1/4" thick (not shown)
Tiling flange position is determined by chosen configuration.

All dimensions are approximate. Structure measurements must be verified against the unit to ensure proper fit.

B3Square 6032

Material : Acrylic

Features

- Acrylic rectangular shower base with square drain
- Low 3 in. threshold base allowing an easy and safe access
- Certain configurations available with Stabili-T anti-slip bottom meeting ADA, ANSI or CSA
- Multiple configurations available to accomodate different types of installation
- Chrome grid and drain included (ABS or PVC available)
- Compatible with Utile, most glue-up shower walls and ceramic tiles
- Integrated leak proof tiling flanges
- Easy to clean and stain-resistant acrylic finish
- Complete drain assembly included for an easy installation

B3SQUARE 6032 - 420005

SKU	Color	Configuration	Dimensions & Weight	Packaging	MSRP
420005-501-001-100	White	Left Drain / Alcove	59 7/8” x 31 7/8” x 3” / 55 lb	81.75 ft³	$ 1358
420005-501-001-101		Right Drain / Alcove			$ 1358
420005-502-001-100		Left Drain / Corner Left			$ 1358
420005-503-001-100		Right Drain / Corner Right			$ 1358
420005-504-001-100		Back End Drain / Alcove Deep			$ 1358
420005-505-001-100		Left Drain / Wall-mount			$ 1358
420005-505-001-101		Right Drain / Wall-mount			$ 1358
420005-506-001-104		Back End Drain / Tunnel			$ 1358
420005-541-001-100		Left Drain / Alcove - Stabili-T			$ 1358
420005-541-001-101		Right Drain / Alcove - Stabili-T			$ 1358
420005-542-001-100		Left Drain / Corner Left - Stabili-T			$ 1358
420005-543-001-100		Right Drain / Corner Right - Stabili-T			$ 1358

COMMON OPTIONS

SKU	Description	MSRP
OPT20253-340	ABS Square drain Available colors: Chrome **(084)**, Brushed Nickel **(305)**, Dark Bronze **(173)**, Matte Black **(340)** and Brushed gold **(343)**	$ 96
OPT20253-305		$ 59
OPT20253-343		$ 96
OPT20253-084		$ 0
OPT20253-173		$ 96
OPT20254-173	PVC Square drain Available colors: Chrome **(084)**, Brushed Nickel **(305)**, Dark Bronze **(173)**, Matte Black **(340)** and Brushed Gold **(343)**	$ 96
OPT20254-305		$ 59
OPT20254-340		$ 96
OPT20254-343		$ 96
OPT20254-084		$ 0
OPT20208-084	PVC drain to respect National Building Code of Canada (CAN/ULC-S102.2 flame and smoke protection) for high rise construction (included in product packaging) Available color: Chrome **(084)**	$ 97

ACCESSORIES

SKU	Description	MSRP
10038458-305-600	Square drain grid Available colors: White **(001)**Chrome **(084)**, Dark Bronze **(173)**, Brushed Nickel **(305)**, Matte Black **(340)** and Brushed Gold **(343)**	$ 59

ACCESSORIES

SKU	Description	MSRP
10038458-084-600	Square drain grid Available colors: White **(001)**Chrome **(084)**, Dark Bronze **(173)**, Brushed Nickel **(305)**, Matte Black **(340)** and Brushed Gold **(343)**	$ 59
10038458-173-600		$ 96
10038458-340-600		$ 96
10038458-001-600		$ 96
10038458-343-600		$ 96
10029133-084	PVC drain to respect National Building Code of Canada (CAN/ULC-S102.2 flame and smoke protection) for high rise construction (sold separately - grid not included) Available color: Chrome **(084)**	$ 97

RECOMMENDED DOORS - VISIT OUR WEBSITE FOR A COMPLETE LIST OF RECOMMENDED DOORS

SKU	Product Name	Pag.
138277	Manhattan 57-59 x 68	893
138997	Halo 56 ½-59 x 78 ¾ - 8mm	870
139353	Incognito 70 56-59 x 70 1/2 in. 8mm Shower door	833
139350	Incognito 70 56-59 x 70 1/2 in. 6mm Shower door	831
135332	Incognito 76 Shaker 56-59 x 76 in. 8mm Shower Door	837
135335	Incognito 76 56-59 x 76 in. 8mm Shower Door	839
136335	Incognito 76 Smoke 56-59 x 76 - 8mm	841
135694	Revelation Square 56-59 x 70 ½-73 - 8mm	852
136691	Revelation Round 56-59 x 70 1/2-73	846
135691	Revelation Square 56-59 x 70 ½-73 - 6mm	850
136694	Revelation Round 56-59 x 70 ½-73 - 8mm	848
135322	Uptown 56-59 x 76 in. 8 mm	854
135324		876
135326	Uptown 57-59 x 76 in. 8 mm	907
135238	Connect Pro 57-58 ½ x 76 - 6mm	862
139580	Reveal Sleek 71 56-59 x 71 1/2 - 8mm	905
138956	Halo Pro TB 56 ½-59 x 78 ¾ - 8mm	868
138952	Halo Pro 56 ½-59 x 78 ¾ - 8mm	866
138541	Halo Pro GS 56 1/2-59 X 78 3/4 - 8mm	864
136955	Duel Alto 56-59 X 78 - 8 mm	812
136272	Duel 56-58 ½ x 70 ½ x 74 - 8 mm	829
138762	Inverto 56-59 x 70 ½-74 - 8mm	843
137420	Odyssey SC 57-59 1/2 x 78 - 8 mm	874
138475	Vela 56 ½-59 x 78 ¾ - 8mm	860
135875	Nebula 56 ½-58 ½ x 78 ¾ - 8mm	856
139587	Capella 78 56-59 x 78 - 8mm	878
137832	ModulR 60 x 78 - 8mm	882
134675	Kameleon SC 55-59 x 71 - 8mm	820
134572	Kameleon 55-59 x 71 - 8mm	827
134665	Kameleon SC 55-59 x 71 - 6mm	814
134565	Kameleon 55-59 x 71 - 6mm	822
136672	Reveal 71 56-59 x 71 ½ - 8mm	901
105412	Polar 54-59 ½ x 68 in.	845

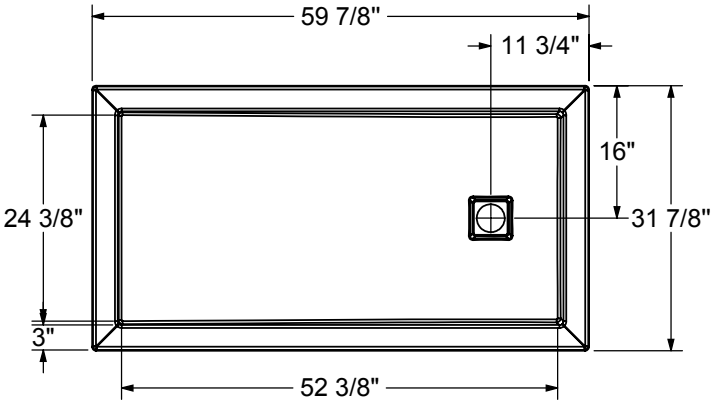

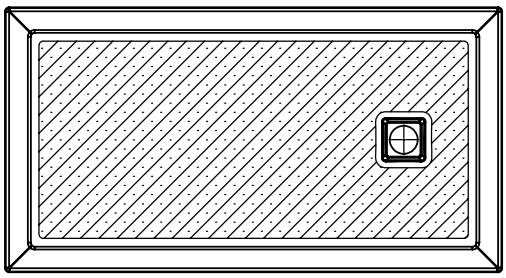

The hatched area represent the antislip surface

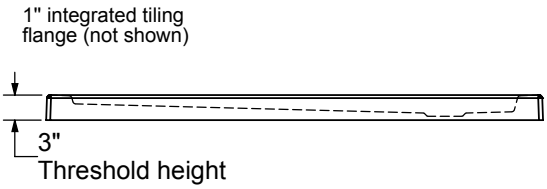

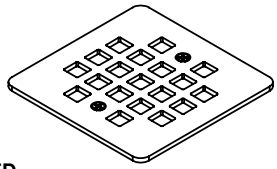

DRAIN INCLUDED ON B3 SQUARE ONLY

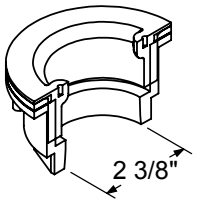

This technical drawing is universal for every 6032 configuration.

Integrated tiling flange : 1" height x 1/4" thick (not shown)
Tiling flange position is determined by chosen configuration.

All dimensions are approximate. Structure measurements must be verified against the unit to ensure proper fit.

B3Square 6034

Material : Acrylic

Features

- Acrylic rectangular shower base with square drain
- Low 3 in. threshold base allowing an easy and safe access
- Certain configurations available with Stabili-T anti-slip bottom meeting ADA, ANSI or CSA
- Multiple configurations available to accomodate different types of installation
- Chrome grid and drain included (ABS or PVC available)
- Compatible with most glue-up Shower walls and ceramic tiles
- Integrated leak proof tiling flanges
- Easy to clean and stain-resistant acrylic finish
- Inclus la quincaillerie de drain pour une installation facile

B3SQUARE 6034 - 420035

SKU	Color	Configuration	Dimensions & Weight	Packaging	MSRP
420035-501-001-100	White	Left Drain / Alcove	59 7/8” x 33 7/8” x 3” / 57 lb	81.75 ft³	$ 1378
420035-501-001-101		Right Drain / Alcove			$ 1378
420035-501-001-102		Center Drain / Alcove			$ 1378
420035-502-001-100		Left Drain / Corner Left			$ 1378
420035-502-001-101		Center Drain / Corner Left			$ 1378
420035-503-001-100		Right Drain / Corner Right			$ 1378
420035-503-001-101		Center Drain / Corner Right			$ 1378
420035-541-001-100		Left Drain / Alcove - Stabili-T			$ 1378
420035-541-001-101		Right Drain / Alcove - Stabili-T			$ 1378
420035-541-001-102		Center Drain / Alcove - Stabili-T			$ 1378
420035-542-001-100		Left Drain / Corner Left - Stabili-T			$ 1378
420035-542-001-101		Center Drain / Corner Left - Stabili-T			$ 1378
420035-543-001-100		Right Drain / Corner Right - Stabili-T			$ 1378
420035-543-001-101		Center Drain / Corner Right - Stabili-T			$ 1378

COMMON OPTIONS

SKU	Description	MSRP
OPT20208-084	PVC drain to respect National Building Code of Canada (CAN/ULC-S102.2 flame and smoke protection) for high rise construction (included in product packaging) Available color: Chrome **(084)**	$ 97
OPT20253-340	ABS Square drain Available colors: Chrome **(084)**, Brushed Nickel **(305)**, Dark Bronze **(173)**, Matte Black **(340)** and Brushed gold **(343)**	$ 96
OPT20253-305		$ 59
OPT20253-343		$ 96
OPT20253-084		$ 0
OPT20253-173		$ 96
OPT20254-173	PVC Square drain Available colors: Chrome **(084)**, Brushed Nickel **(305)**, Dark Bronze **(173)**, Matte Black **(340)** and Brushed Gold **(343)**	$ 96
OPT20254-305		$ 59
OPT20254-340		$ 96
OPT20254-343		$ 96
OPT20254-084		$ 0

ACCESSORIES

SKU	Description	MSRP
10029133-084	PVC drain to respect National Building Code of Canada (CAN/ULC-S102.2 flame and smoke protection) for high rise construction (sold separately - grid not included) Available color: Chrome **(084)**	$ 97

ACCESSORIES

SKU	Description	MSRP
10038458-305-600	Square drain grid Available colors: White **(001)**Chrome **(084)**, Dark Bronze **(173)**, Brushed Nickel **(305)**, Matte Black **(340)** and Brushed Gold **(343)**	$ 59
10038458-084-600		$ 59
10038458-173-600		$ 96
10038458-340-600		$ 96
10038458-001-600		$ 96
10038458-343-600		$ 96

RECOMMENDED DOORS - VISIT OUR WEBSITE FOR A COMPLETE LIST OF RECOMMENDED DOORS

SKU	Product Name	Pag.
138997	Halo 56 ½-59 x 78 ¾ - 8mm	870
139580	Reveal Sleek 71 56-59 x 71 1/2 - 8mm	905
136272	Duel 56-58 ½ x 70 ½ x 74 - 8 mm	829
136672	Reveal 71 56-59 x 71 ½ - 8mm	901

The hatyched area represent the antislip surface

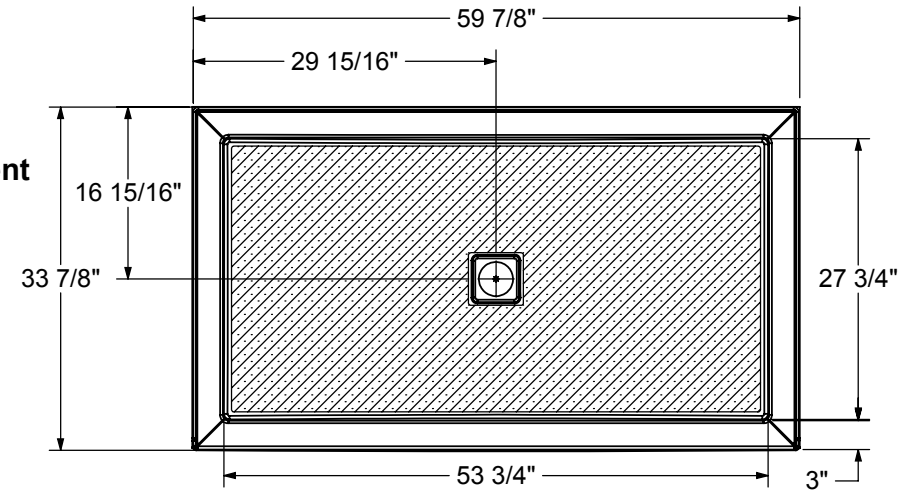

DRAIN INCLUDED ON B3 SQUARE ONLY

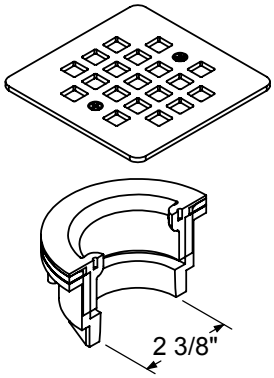

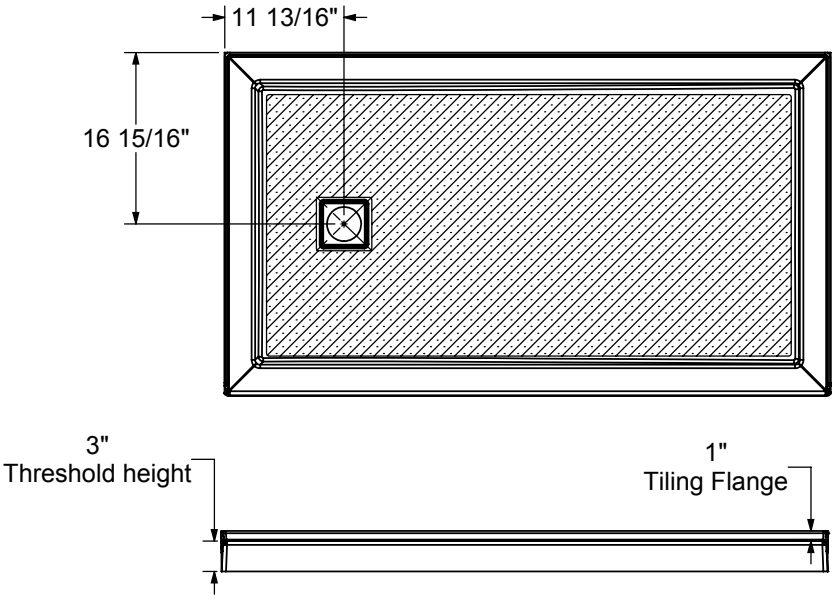

This technical drawing is universal for every 6034 configuration.

Integrated tiling flange : 1'' height x 1/4'' thick
Tiling flange position is determined by chosen configuration.

All dimensions are approximate. Structure measurements must be verified against the unit to ensure proper fit.

B3Square 6036

Material : Acrylic

Features

B3SQUARE 6036 - 420006

SKU	Color	Configuration	Dimensions & Weight	Packaging	MSRP
420006-501-001-100	White	Left Drain / No Seat Seat / Alcove	59 7/8” x 35 7/8” x 3” / 62 lb	8.32 ft^3	$ 1399
420006-501-001-101		Right Drain / No Seat Seat / Alcove			$ 1399
420006-501-001-102		Center Drain / No Seat Seat / Alcove			$ 1399
420006-502-001-100		Left Drain / No Seat Seat / Corner Left			$ 1399
420006-502-001-101		Center Drain / No Seat Seat / Corner Left			$ 1399
420006-503-001-100		Right Drain / No Seat Seat / Corner Right			$ 1399
420006-503-001-101		Center Drain / No Seat Seat / Corner Right			$ 1399
420006-504-001-100		Back End Drain / Alcove Deep			$ 1399
420006-504-001-101		Center Drain / Alcove Deep			$ 1399
420006-505-001-100		Left Drain / Wall-mount			$ 1399
420006-505-001-101		Right Drain / Wall-mount			$ 1399
420006-505-001-102		Center Drain / Wall-mount			$ 1399
420006-506-001-100		Center Drain / Tunnel			$ 1399
420006-506-001-107		Back End Drain / Tunnel			$ 1399
420006-541-001-100		Left Drain / Alcove - Stabili-T			$ 1399
420006-541-001-101		Right Drain / Alcove - Stabili-T			$ 1399
420006-541-001-102		Center Drain / Alcove - Stabili-T			$ 1399
420006-542-001-100		Left Drain / Corner Left - Stabili-T			$ 1399
420006-542-001-101		Center Drain / Corner Left - Stabili-T			$ 1399
420006-543-001-100		Right Drain / Corner Right - Stabili-T			$ 1399
420006-543-001-101		Center Drain / Corner Right - Stabili-T			$ 1399

COMMON OPTIONS

SKU	Description	MSRP
OPT20253-340	ABS Square drain Available colors: Chrome **(084)**, Brushed Nickel **(305)**, Dark Bronze **(173)**, Matte Black **(340)** and Brushed gold **(343)**	$ 96
OPT20253-305		$ 59
OPT20253-343		$ 96
OPT20253-084		$ 0
OPT20253-173		$ 96
OPT20254-173	PVC Square drain Available colors: Chrome **(084)**, Brushed Nickel **(305)**, Dark Bronze **(173)**, Matte Black **(340)** and Brushed Gold **(343)**	$ 96
OPT20254-305		$ 59
OPT20254-340		$ 96
OPT20254-343		$ 96
OPT20254-084		$ 0

COMMON OPTIONS

SKU	Description	MSRP
OPT20208-084	PVC drain to respect National Building Code of Canada (CAN/ULC-S102.2 flame and smoke protection) for high rise construction (included in product packaging) Available color: Chrome **(084)**	$ 97

ACCESSORIES

SKU	Description	MSRP
10038458-305-600	Square drain grid Available colors: White **(001)**Chrome **(084)**, Dark Bronze **(173)**, Brushed Nickel **(305)**, Matte Black **(340)** and Brushed Gold **(343)**	$ 59
10038458-084-600		$ 59
10038458-173-600		$ 96
10038458-340-600		$ 96
10038458-001-600		$ 96
10038458-343-600		$ 96
10029133-084	PVC drain to respect National Building Code of Canada (CAN/ULC-S102.2 flame and smoke protection) for high rise construction (sold separately - grid not included) Available color: Chrome **(084)**	$ 97

RECOMMENDED DOORS - VISIT OUR WEBSITE FOR A COMPLETE LIST OF RECOMMENDED DOORS

SKU	Product Name	Pag.
138277	Manhattan 57-59 x 68	893
138997	Halo 56 ½-59 x 78 ¾ - 8mm	870
139353	Incognito 70 56-59 x 70 1/2 in. 8mm Shower door	833
139350	Incognito 70 56-59 x 70 1/2 in. 6mm Shower door	831
135332	Incognito 76 Shaker 56-59 x 76 in. 8mm Shower Door	837
135335	Incognito 76 56-59 x 76 in. 8mm Shower Door	839
136335	Incognito 76 Smoke 56-59 x 76 - 8mm	841
135694	Revelation Square 56-59 x 70 ½-73 - 8mm	852
136691	Revelation Round 56-59 x 70 1/2-73	846
135691	Revelation Square 56-59 x 70 ½-73 - 6mm	850
136694	Revelation Round 56-59 x 70 ½-73 - 8mm	848
135322	Uptown 56-59 x 76 in. 8 mm	854
135324		876
135326	Uptown 57-59 x 76 in. 8 mm	907
135238	Connect Pro 57-58 ½ x 76 - 6mm	862
139580	Reveal Sleek 71 56-59 x 71 1/2 - 8mm	905
138956	Halo Pro TB 56 ½-59 x 78 ¾ - 8mm	868
138952	Halo Pro 56 ½-59 x 78 ¾ - 8mm	866
138541	Halo Pro GS 56 1/2-59 X 78 3/4 - 8mm	864
136955	Duel Alto 56-59 X 78 - 8 mm	812
136272	Duel 56-58 ½ x 70 ½ x 74 - 8 mm	829
138762	Inverto 56-59 x 70 ½-74 - 8mm	843
137420	Odyssey SC 57-59 1/2 x 78 - 8 mm	874
138475	Vela 56 ½-59 x 78 ¾ - 8mm	860
135875	Nebula 56 ½-58 ½ x 78 ¾ - 8mm	856
139587	Capella 78 56-59 x 78 - 8mm	878
137832	ModulR 60 x 78 - 8mm	882
134675	Kameleon SC 55-59 x 71 - 8mm	820
134572	Kameleon 55-59 x 71 - 8mm	827
134665	Kameleon SC 55-59 x 71 - 6mm	814
134565	Kameleon 55-59 x 71 - 6mm	822
136672	Reveal 71 56-59 x 71 ½ - 8mm	901
105412	Polar 54-59 ½ x 68 in.	845

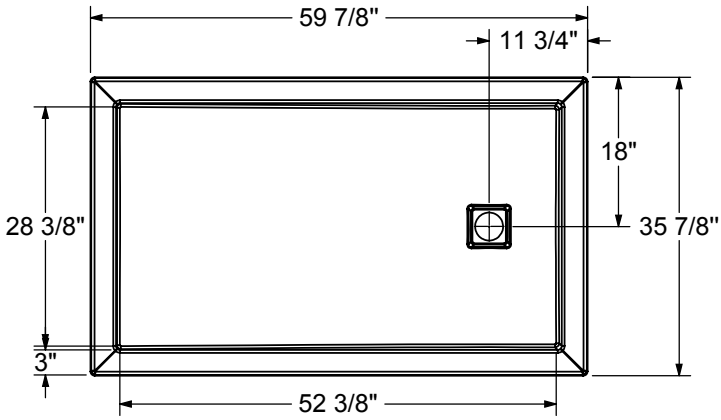

DRAIN INCLUDED ON B3 SQUARE ONLY

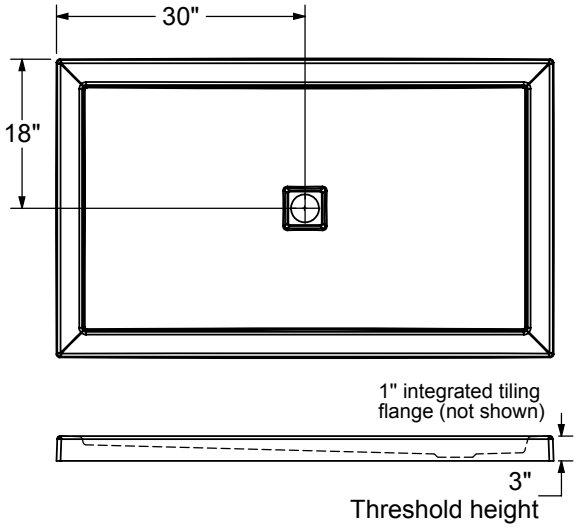

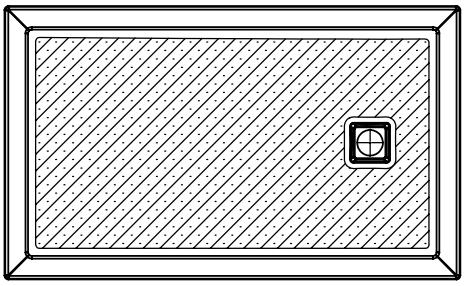

The hatched area represent the anti-slip surface

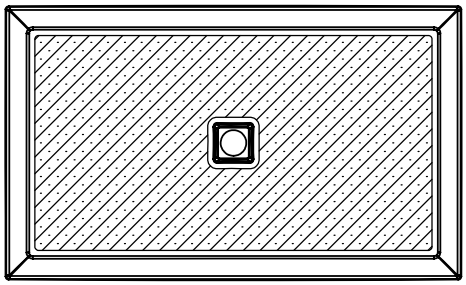

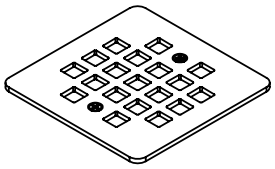

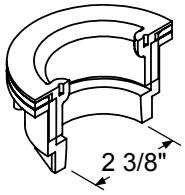

This technical drawing is universal for every 6036 configuration.

Integrated tiling flange : 1" height x 1/4" thick (not shown)
Tiling flange position is determined by chosen configuration.

All dimensions are approximate. Structure measurements must be verified against the unit to ensure proper fit.

B3Square 6042

Material : Acrylic

Features

- Acrylic rectangular shower base with square drain
- Low 3 in. threshold base allowing an easy and safe access
- Certain configurations available with Stabili-T anti-slip bottom meeting ADA, ANSI or CSA
- Multiple configurations available to accomodate different types of installation
- Chrome grid and drain included (ABS or PVC available)
- Compatible with most glue-up Shower walls and ceramic tiles
- Integrated leak proof tiling flanges
- Easy to clean and stain-resistant acrylic finish
- Inclus la quincaillerie de drain pour une installation facile

B3SQUARE 6042 - 420036

SKU	Color	Configuration	Dimensions & Weight	Packaging	MSRP
420036-501-001-100	White	Center Drain / Alcove	59 7/8” x 41 7/8” x 3” / 59 lb	81.75 ft^3	$ 1439
420036-502-001-100		Center Drain / Corner Left			$ 1439
420036-503-001-100		Center Drain / Corner Right			$ 1439
420036-541-001-100		Center Drain / Alcove - Stabili-T			$ 1439
420036-542-001-100		Center Drain / Corner Left - Stabili-T			$ 1439
420036-543-001-100		Center Drain / Corner Right - Stabili-T			$ 1439

COMMON OPTIONS

SKU	Description	MSRP
OPT20208-084	PVC drain to respect National Building Code of Canada (CAN/ULC-S102.2 flame and smoke protection) for high rise construction (included in product packaging) Available color: Chrome **(084)**	$ 97
OPT20253-340	ABS Square drain Available colors: Chrome **(084)**, Brushed Nickel **(305)**, Dark Bronze **(173)**, Matte Black **(340)** and Brushed gold **(343)**	$ 96
OPT20253-305		$ 59
OPT20253-343		$ 96
OPT20253-084		$ 0
OPT20253-173		$ 96
OPT20254-173	PVC Square drain Available colors: Chrome **(084)**, Brushed Nickel **(305)**, Dark Bronze **(173)**, Matte Black **(340)** and Brushed Gold **(343)**	$ 96
OPT20254-305		$ 59
OPT20254-340		$ 96
OPT20254-343		$ 96
OPT20254-084		$ 0

ACCESSORIES

SKU	Description	MSRP
10029133-084	PVC drain to respect National Building Code of Canada (CAN/ULC-S102.2 flame and smoke protection) for high rise construction (sold separately - grid not included) Available color: Chrome **(084)**	$ 97
10038458-305-600	Square drain grid Available colors: White **(001)**Chrome **(084)**, Dark Bronze **(173)**, Brushed Nickel **(305)**, Matte Black **(340)** and Brushed Gold **(343)**	$ 59
10038458-084-600		$ 59
10038458-173-600		$ 96
10038458-340-600		$ 96
10038458-001-600		$ 96
10038458-343-600		$ 96

The hatyched area represent the antislip surface

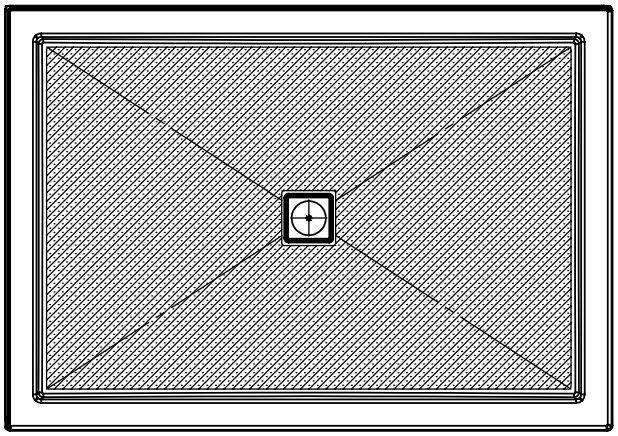

DRAIN INCLUDED ON B3 SQUARE ONLY

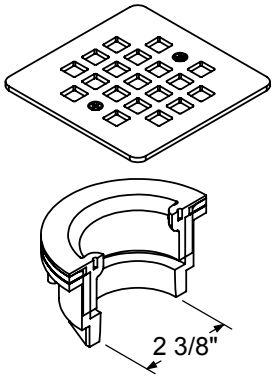

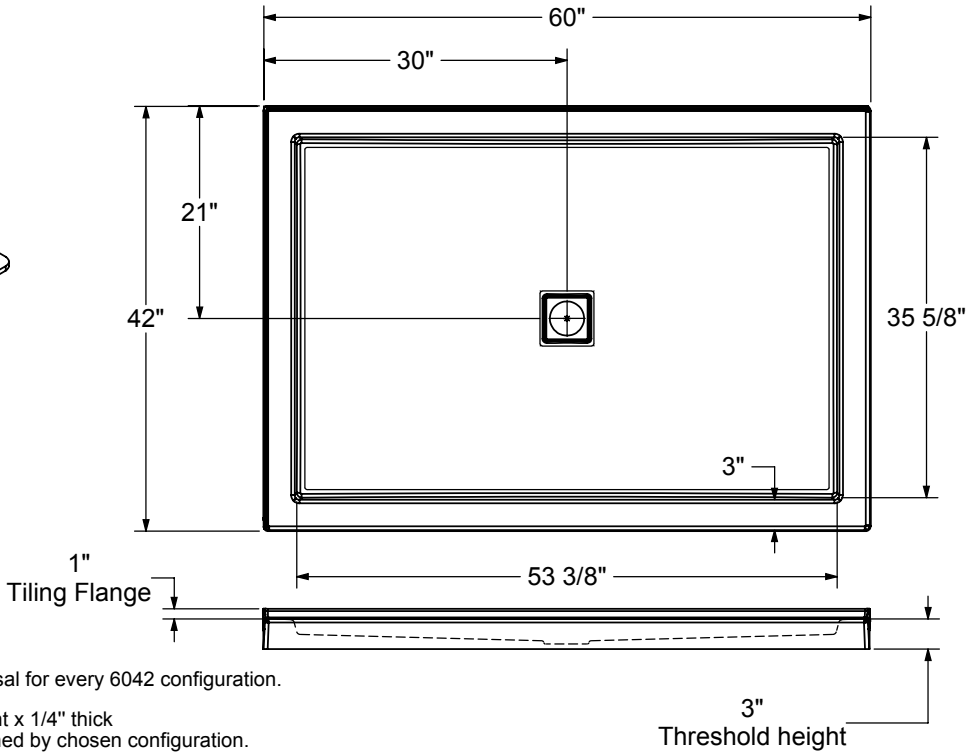

This technical drawing is universal for every 6042 configuration.

Integrated tiling flange : 1'' height x 1/4'' thick
Tiling flange position is determined by chosen configuration.

All dimensions are approximate. Structure measurements must be verified against the unit to ensure proper fit.

Go to Table of Contents

B3Square 7236

Material : Acrylic

Features

- Acrylic rectangular shower base with square drain
- Low 3 in. threshold base allowing an easy and safe access
- Certain configurations available with Stabili-T anti-slip bottom meeting ADA, ANSI or CSA
- Multiple configurations available to accomodate different types of installation
- Chrome grid and drain included (ABS or PVC available)
- Compatible with most glue-up Shower walls and ceramic tiles
- Integrated leak proof tiling flanges
- Easy to clean and stain-resistant acrylic finish
- Inclus la quincaillerie de drain pour une installation facile

B3SQUARE 7236 - 420042

SKU	Color	Configuration	Dimensions & Weight	Packaging	MSRP
420042-501-001-000	White	Center Drain / Alcove	71 7/8” x 35 7/8” x 3” / 60 lb	18.59 ft^3	$ 1452
420042-502-001-000		Center Drain / Corner Left			$ 1452
420042-503-001-000		Center Drain / Corner Right			$ 1452

COMMON OPTIONS

SKU	Description	MSRP
OPT20208-084	PVC drain to respect National Building Code of Canada (CAN/ULC-S102.2 flame and smoke protection) for high rise construction (included in product packaging) Available color: Chrome **(084)**	$ 97
OPT20253-340	ABS Square drain Available colors: Chrome **(084)**, Brushed Nickel **(305)**, Dark Bronze **(173)**, Matte Black **(340)** and Brushed gold **(343)**	$ 96
OPT20253-305		$ 59
OPT20253-343		$ 96
OPT20253-084		$ 0
OPT20253-173		$ 96
OPT20254-173	PVC Square drain Available colors: Chrome **(084)**, Brushed Nickel **(305)**, Dark Bronze **(173)**, Matte Black **(340)** and Brushed Gold **(343)**	$ 96
OPT20254-305		$ 59
OPT20254-340		$ 96
OPT20254-343		$ 96
OPT20254-084		$ 0

ACCESSORIES

SKU	Description	MSRP
10029133-084	PVC drain to respect National Building Code of Canada (CAN/ULC-S102.2 flame and smoke protection) for high rise construction (sold separately - grid not included) Available color: Chrome **(084)**	$ 97
10038458-305-600	Square drain grid Available colors: White **(001)**Chrome **(084)**, Dark Bronze **(173)**, Brushed Nickel **(305)**, Matte Black **(340)** and Brushed Gold **(343)**	$ 59
10038458-084-600		$ 59
10038458-173-600		$ 96
10038458-340-600		$ 96
10038458-001-600		$ 96
10038458-343-600		$ 96

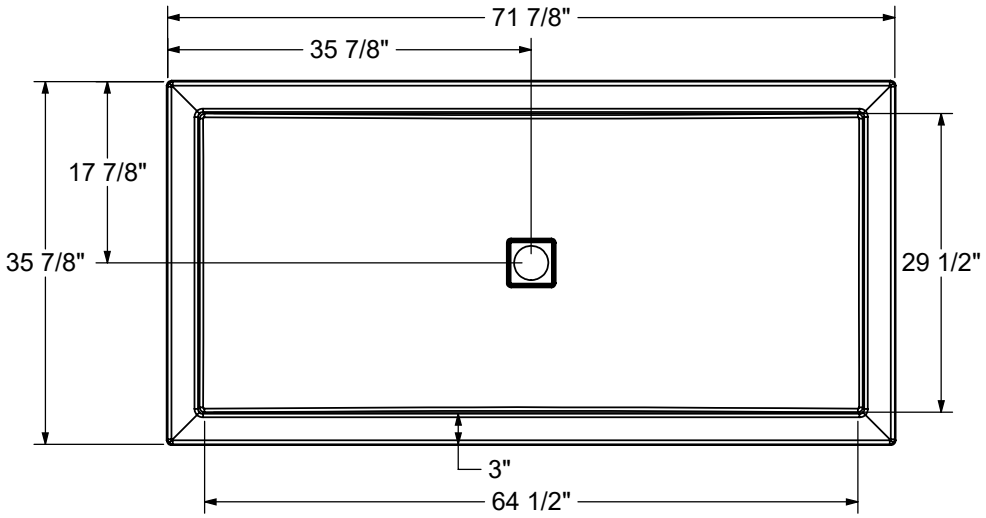

DRAIN INCLUDED ON B3 SQUARE ONLY

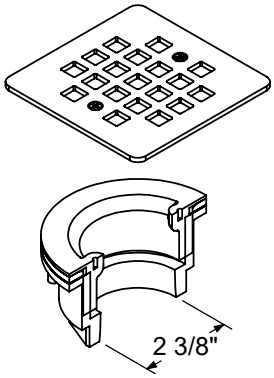

1" integrated tiling flange (not shown)

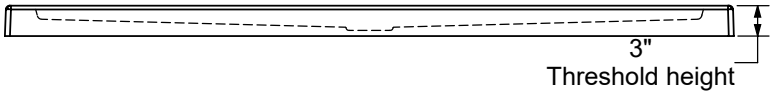

This technical drawing is universal for every 7236 configuration.

Integrated tiling flange : 1" height x 1/4" thick
Tiling flange position is determined by chosen configuration.

All dimensions are approximate. Structure measurements must be verified against the unit to ensure proper fit.

B3X 3636 - Alcove

Material : Acrylic

Features

- Acrylic alcove shower base with square drain
- Designed for tiled wall application with integrated water management features
- Integrated leak proof tiling flanges and weep holes to ensure water management
- Chrome grid and complete drain assembly included (ABS or PVC available)
- Multiple drain grid finishes available to match other finishes in your bathroom
- Optimized floor design improving showering space
- Center drain location
- Available with Stabili-T anti-slip bottom meeting ADA, ANSI or CSA requirements
- Easy to clean and stain-resistant acrylic finish

B3X 3636 - 420020

SKU	Color	Configuration	Dimensions & Weight	Packaging	MSRP
420020-501-001-000	White	Center Drain / Alcove - Stabili-T	35 7/8” x 35 7/8” x 3” / 35 lb	4.99 ft^3	$ 923
420020-541-001-000		Center Drain / Alcove			$ 923

COMMON OPTIONS

SKU	Description	MSRP
OPT20253-340	ABS Square drain Available colors: Chrome **(084)**, Brushed Nickel **(305)**, Dark Bronze **(173)**, Matte Black **(340)** and Brushed gold **(343)**	$ 96
OPT20253-305		$ 59
OPT20253-343		$ 96
OPT20253-084		$ 0
OPT20253-173		$ 96
OPT20208-084	PVC drain to respect National Building Code of Canada (CAN/ULC-S102.2 flame and smoke protection) for high rise construction (included in product packaging) Available color: Chrome **(084)**	$ 97
OPT20254-173	PVC Square drain Available colors: Chrome **(084)**, Brushed Nickel **(305)**, Dark Bronze **(173)**, Matte Black **(340)** and Brushed Gold **(343)**	$ 96
OPT20254-305		$ 59
OPT20254-340		$ 96
OPT20254-343		$ 96
OPT20254-084		$ 0

ACCESSORIES

SKU	Description	MSRP
10038458-305-600	Square drain grid Available colors: White **(001)**Chrome **(084)**, Dark Bronze **(173)**, Brushed Nickel **(305)**, Matte Black **(340)** and Brushed Gold **(343)**	$ 59
10038458-084-600		$ 59
10038458-173-600		$ 96
10038458-340-600		$ 96
10038458-001-600		$ 96
10038458-343-600		$ 96
10029133-084	PVC drain to respect National Building Code of Canada (CAN/ULC-S102.2 flame and smoke protection) for high rise construction (sold separately - grid not included) Available color: Chrome **(084)**	$ 97

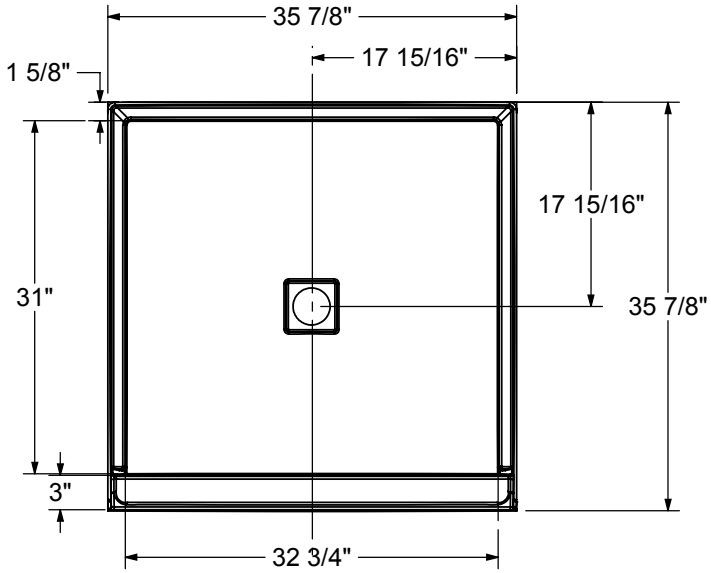

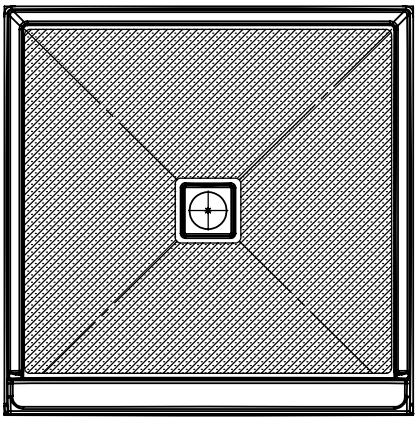

The hatched area represent the antislip surface

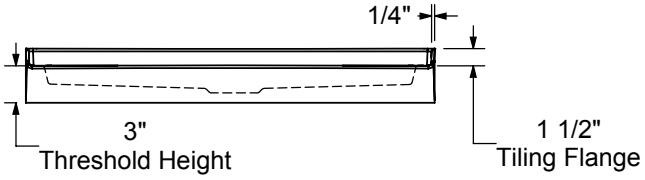

DRAIN INCLUDED ON B3 SQUARE ONLY

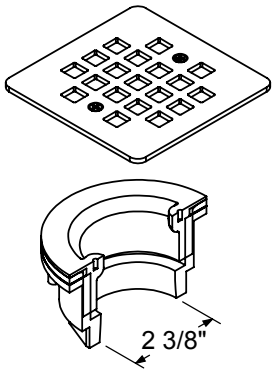

All dimensions are approximate. Structure measurements must be verified against the unit to ensure proper fit.

B3X 3636 - Corner

Material : Acrylic

Features

- Acrylic corner shower base with square drain
- Designed for tiled wall application with integrated water management features
- Integrated leak proof tiling flanges and weep holes to ensure water management
- Chrome grid and complete drain assembly included (ABS or PVC available)
- Multiple drain grid finishes available to match other finishes in your bathroom
- Optimized floor design improving showering space
- Center drain location
- Available with Stabili-T anti-slip bottom meeting ADA, ANSI or CSA requirements
- Easy to clean and stain-resistant acrylic finish

B3X 3636 - 420021

SKU	Color	Configuration	Dimensions & Weight	Packaging	MSRP
420021-500-001-000	White	Center Drain / Corner Left or Right	35 7/8” x 35 7/8” x 3” / 35 lb	4.99 ft^3	$ 923
420021-540-001-000		Center Drain / Corner Left or Right - Stabili-T			$ 923

COMMON OPTIONS

SKU	Description	MSRP
OPT20208-084	PVC drain to respect National Building Code of Canada (CAN/ULC-S102.2 flame and smoke protection) for high rise construction (included in product packaging) Available color: Chrome **(084)**	$ 97
OPT20253-340	ABS Square drain Available colors: Chrome **(084)**, Brushed Nickel **(305)**, Dark Bronze **(173)**, Matte Black **(340)** and Brushed gold **(343)**	$ 96
OPT20253-305		$ 59
OPT20253-343		$ 96
OPT20253-084		$ 0
OPT20253-173		$ 96
OPT20254-173	PVC Square drain Available colors: Chrome **(084)**, Brushed Nickel **(305)**, Dark Bronze **(173)**, Matte Black **(340)** and Brushed Gold **(343)**	$ 96
OPT20254-305		$ 59
OPT20254-340		$ 96
OPT20254-343		$ 96
OPT20254-084		$ 0

ACCESSORIES

SKU	Description	MSRP
10029133-084	PVC drain to respect National Building Code of Canada (CAN/ULC-S102.2 flame and smoke protection) for high rise construction (sold separately - grid not included) Available color: Chrome **(084)**	$ 97
10038458-305-600	Square drain grid Available colors: White **(001)**Chrome **(084)**, Dark Bronze **(173)**, Brushed Nickel **(305)**, Matte Black **(340)** and Brushed Gold **(343)**	$ 59
10038458-084-600		$ 59
10038458-173-600		$ 96
10038458-340-600		$ 96
10038458-001-600		$ 96
10038458-343-600		$ 96

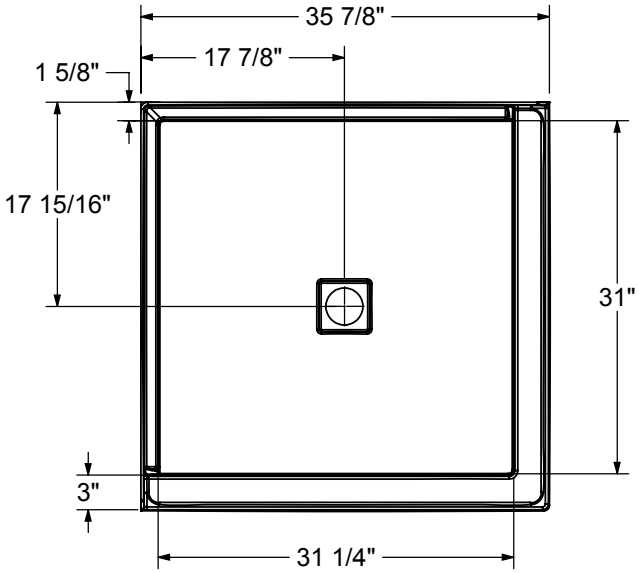

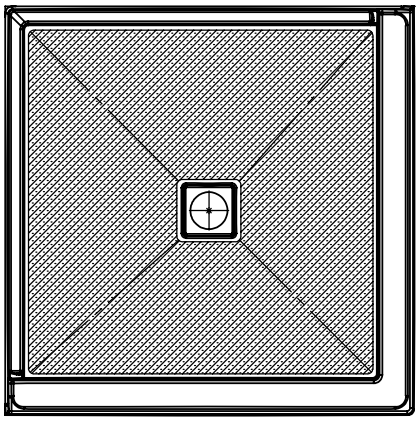

The hatched area represent the antislip surface

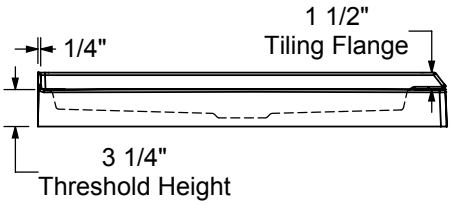

DRAIN INCLUDED ON B3 SQUARE ONLY

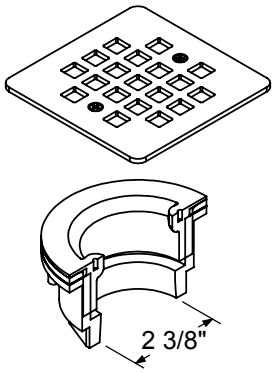

All dimensions are approximate. Structure measurements must be verified against the unit to ensure proper fit.

B3X 4236 - Alcove

Material : Acrylic

Features

- Acrylic alcove shower base with square drain
- Designed for tiled wall application with integrated water management features
- Integrated leak proof tiling flanges and weep holes to ensure water management
- Chrome grid and complete drain assembly included (ABS or PVC available)
- Multiple drain grid finishes available to match other finishes in your bathroom
- Optimized floor design improving showering space
- Center drain location
- Available with Stabili-T anti-slip bottom meeting ADA, ANSI or CSA requirements
- Easy to clean and stain-resistant acrylic finish

B3X 4236 - 420039

SKU	Color	Configuration	Dimensions & Weight	Packaging	MSRP
420039-501-001-000	White	Center Drain / Alcove	41 7/8” x 35 7/8” x 3” / 45 lb	5.94 ft^3	$ 1147
420039-541-001-000		Center Drain / Alcove - Stabili-T			$ 1147

COMMON OPTIONS

SKU	Description	MSRP
OPT20208-084	PVC drain to respect National Building Code of Canada (CAN/ULC-S102.2 flame and smoke protection) for high rise construction (included in product packaging) Available color: Chrome **(084)**	$ 97
OPT20253-340	ABS Square drain Available colors: Chrome **(084)**, Brushed Nickel **(305)**, Dark Bronze **(173)**, Matte Black **(340)** and Brushed gold **(343)**	$ 96
OPT20253-305		$ 59
OPT20253-343		$ 96
OPT20253-084		$ 0
OPT20253-173		$ 96
OPT20254-173	PVC Square drain Available colors: Chrome **(084)**, Brushed Nickel **(305)**, Dark Bronze **(173)**, Matte Black **(340)** and Brushed Gold **(343)**	$ 96
OPT20254-305		$ 59
OPT20254-340		$ 96
OPT20254-343		$ 96
OPT20254-084		$ 0

ACCESSORIES

SKU	Description	MSRP
10029133-084	PVC drain to respect National Building Code of Canada (CAN/ULC-S102.2 flame and smoke protection) for high rise construction (sold separately - grid not included) Available color: Chrome **(084)**	$ 97
10038458-305-600	Square drain grid Available colors: White **(001)**Chrome **(084)**, Dark Bronze **(173)**, Brushed Nickel **(305)**, Matte Black **(340)** and Brushed Gold **(343)**	$ 59
10038458-084-600		$ 59
10038458-173-600		$ 96
10038458-340-600		$ 96
10038458-001-600		$ 96
10038458-343-600		$ 96

Go to Table of Contents

The hatched area represent the antislip surface

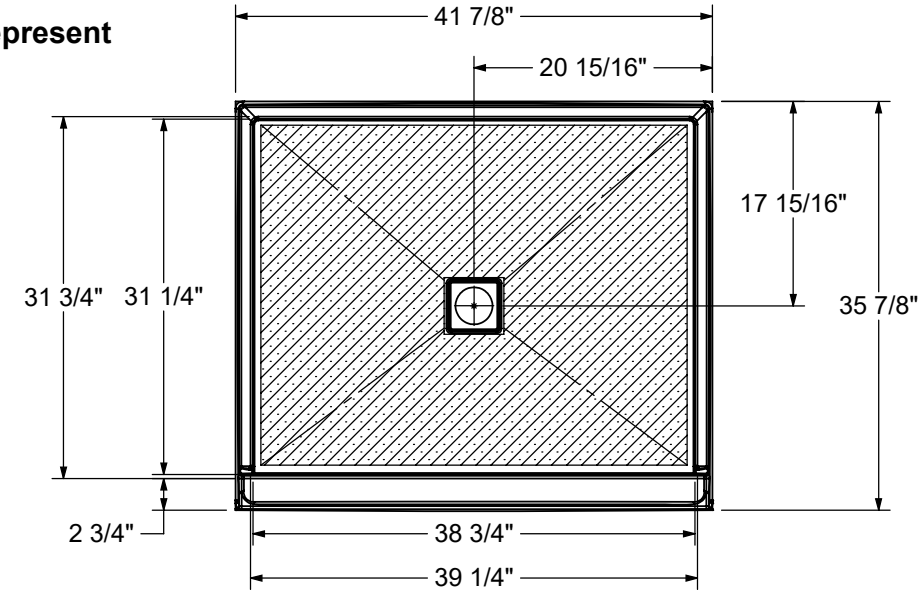

DRAIN INCLUDED ON B3 SQUARE ONLY

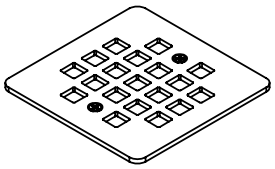

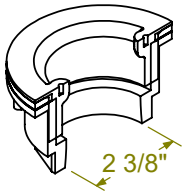

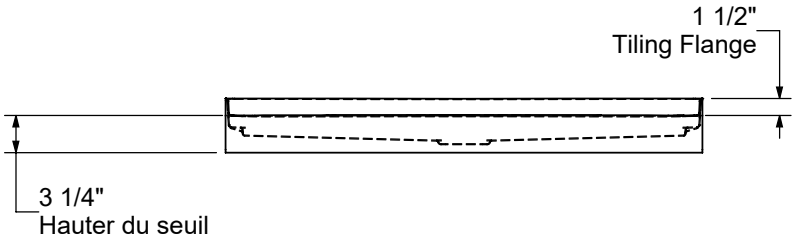

This technical drawing is universal for every 4236 configuration.

Integrated tiling flange : 1 1/2" height x 1/4" thick
Tiling flange position is determined by chosen configuration.

All dimensions are approximate. Structure measurements must be verified against the unit to ensure proper fit.

B3X 4236 - Corner

Material : Acrylic

Features

- Acrylic corner shower base with square drain
- Designed for tiled wall application with integrated water management features
- Integrated leak proof tiling flanges and weep holes to ensure water management
- Chrome grid and complete drain assembly included (ABS or PVC available)
- Multiple drain grid finishes available to match other finishes in your bathroom
- Optimized floor design improving showering space
- Center drain location
- Available with Stabili-T anti-slip bottom meeting ADA, ANSI or CSA requirements
- Easy to clean and stain-resistant acrylic finish

B3X 4236 - 420040

SKU	Color	Configuration	Dimensions & Weight	Packaging	MSRP
420040-502-001-000	White	Center Drain / Corner Left	41 7/8” x 35 7/8” x 3” / 45 lb	5.94 ft^3	$ 1147
420040-542-001-000		Center Drain / Corner Left - Stabili-T			$ 1147

B3X 4236 - 420041

SKU	Color	Configuration	Dimensions & Weight	Packaging	MSRP
420041-503-001-000	White	Center Drain / Corner Right	41 7/8” x 35 7/8” x 3” / 45 lb	5.94 ft^3	$ 1147
420041-543-001-000		Center Drain / Corner Right - Stabili-T			$ 1147

COMMON OPTIONS

SKU	Description	MSRP
OPT20208-084	PVC drain to respect National Building Code of Canada (CAN/ULC-S102.2 flame and smoke protection) for high rise construction (included in product packaging) Available color: Chrome **(084)**	$ 97
OPT20253-340	ABS Square drain Available colors: Chrome **(084)**, Brushed Nickel **(305)**, Dark Bronze **(173)**, Matte Black **(340)** and Brushed gold **(343)**	$ 96
OPT20253-305		$ 59
OPT20253-343		$ 96
OPT20253-084		$ 0
OPT20253-173		$ 96
OPT20254-173	PVC Square drain Available colors: Chrome **(084)**, Brushed Nickel **(305)**, Dark Bronze **(173)**, Matte Black **(340)** and Brushed Gold **(343)**	$ 96
OPT20254-305		$ 59
OPT20254-340		$ 96
OPT20254-343		$ 96
OPT20254-084		$ 0

ACCESSORIES

SKU	Description	MSRP
10029133-084	PVC drain to respect National Building Code of Canada (CAN/ULC-S102.2 flame and smoke protection) for high rise construction (sold separately - grid not included) Available color: Chrome **(084)**	$ 97
10038458-305-600	Square drain grid Available colors: White **(001)**Chrome **(084)**, Dark Bronze **(173)**, Brushed Nickel **(305)**, Matte Black **(340)** and Brushed Gold **(343)**	$ 59

ACCESSORIES

SKU	Description	MSRP
10038458-084-600	Square drain grid Available colors: White **(001)**Chrome **(084)**, Dark Bronze **(173)**, Brushed Nickel **(305)**, Matte Black **(340)** and Brushed Gold **(343)**	$ 59
10038458-173-600		$ 96
10038458-340-600		$ 96
10038458-001-600		$ 96
10038458-343-600		$ 96

RECOMMENDED DOORS - VISIT OUR WEBSITE FOR A COMPLETE LIST OF RECOMMENDED DOORS

SKU	Product Name	Pag.
139576	Reveal Sleek 71 38-41 x 71 1/2 - 8mm	904
136679	Reveal 71 38-41 x 71 ½ - 8 mm	901

The hatched area represent the antislip surface

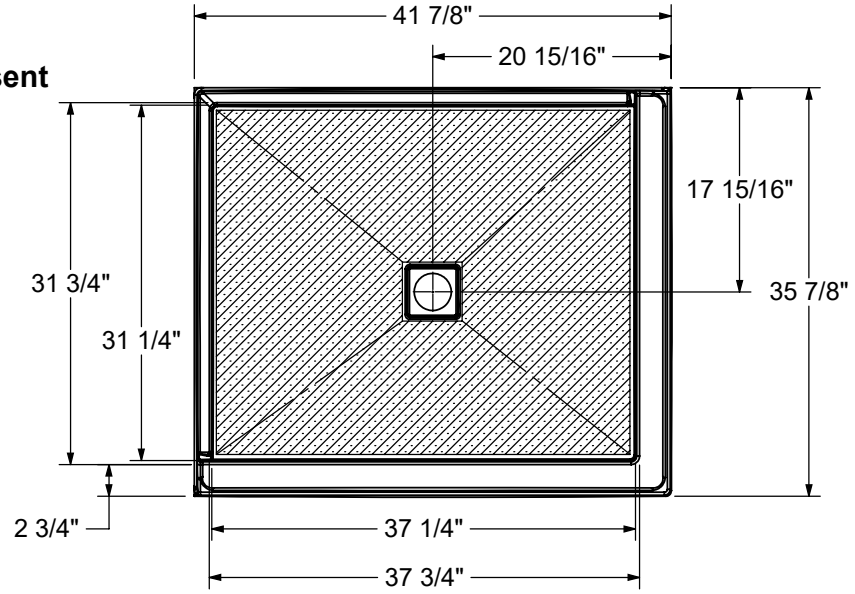

DRAIN INCLUDED ON B3 SQUARE ONLY

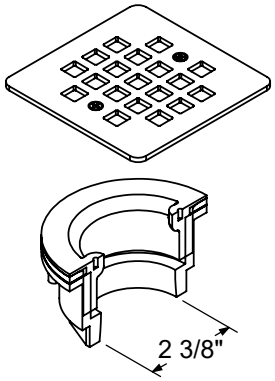

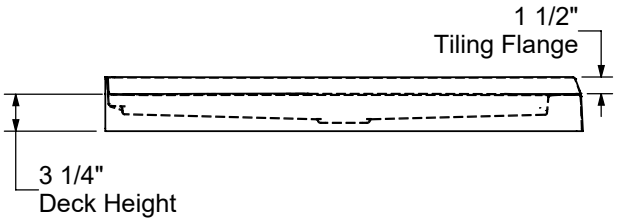

This technical drawing is universal for every 4236 configuration.

Integrated tiling flange : 1 1/2" height x 1/4" thick
Tiling flange position is determined by chosen configuration.

All dimensions are approximate. Structure measurements must be verified against the unit to ensure proper fit.

B3X 4836 - Alcove

Material : Acrylic

Features

- Acrylic alcove shower base with square drain
- Designed for tiled wall application with integrated water management features
- Integrated leak proof tiling flanges and weep holes to ensure water management
- Chrome grid and complete drain assembly included (ABS or PVC available)
- Multiple drain grid finishes available to match other finishes in your bathroom
- Optimized floor design improving showering space
- Center drain location
- Available with Stabili-T anti-slip bottom meeting ADA, ANSI or CSA requirements
- Easy to clean and stain-resistant acrylic finish

B3X 4836 - 420030

SKU	Color	Configuration	Dimensions & Weight	Packaging	MSRP
420030-501-001-000	White	Center Drain / Alcove	47 7/8” x 35 7/8” x 3” / 47 lb	9.66 ft^3	$ 1192
420030-541-001-000		Center Drain / Alcove - Stabili-T			$ 1192

COMMON OPTIONS

SKU	Description	MSRP
OPT20208-084	PVC drain to respect National Building Code of Canada (CAN/ULC-S102.2 flame and smoke protection) for high rise construction (included in product packaging) Available color: Chrome **(084)**	$ 97
OPT20253-340	ABS Square drain Available colors: Chrome **(084)**, Brushed Nickel **(305)**, Dark Bronze **(173)**, Matte Black **(340)** and Brushed gold **(343)**	$ 96
OPT20253-305		$ 59
OPT20253-343		$ 96
OPT20253-084		$ 0
OPT20253-173		$ 96
OPT20254-173	PVC Square drain Available colors: Chrome **(084)**, Brushed Nickel **(305)**, Dark Bronze **(173)**, Matte Black **(340)** and Brushed Gold **(343)**	$ 96
OPT20254-305		$ 59
OPT20254-340		$ 96
OPT20254-343		$ 96
OPT20254-084		$ 0

ACCESSORIES

SKU	Description	MSRP
10038458-305-600	Square drain grid Available colors: White **(001)**Chrome **(084)**, Dark Bronze **(173)**, Brushed Nickel **(305)**, Matte Black **(340)** and Brushed Gold **(343)**	$ 59
10038458-084-600		$ 59
10038458-173-600		$ 96
10038458-340-600		$ 96
10038458-001-600		$ 96
10038458-343-600		$ 96
10029133-084	PVC drain to respect National Building Code of Canada (CAN/ULC-S102.2 flame and smoke protection) for high rise construction (sold separately - grid not included) Available color: Chrome **(084)**	$ 97

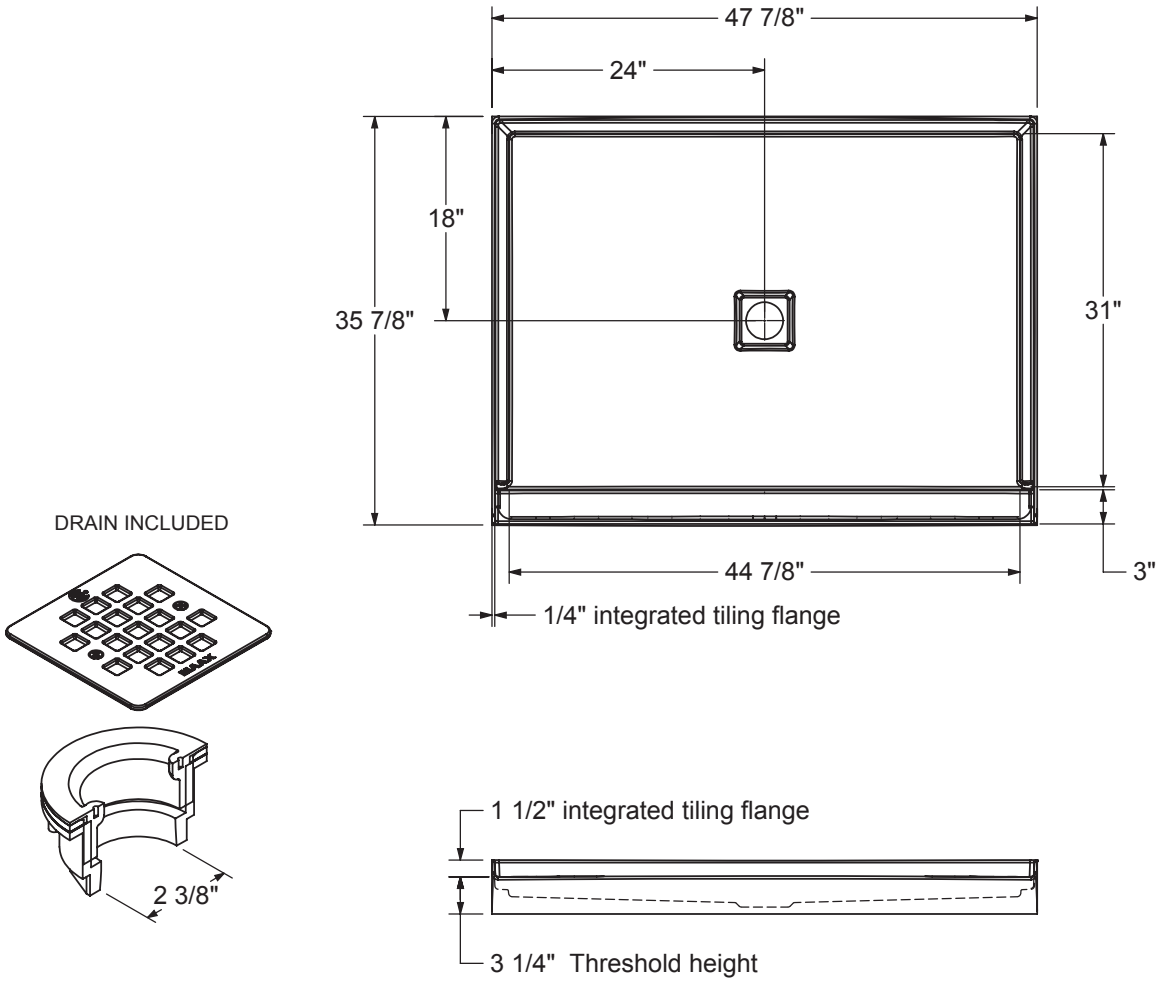

All dimensions are approximate. Structure measurements must be verified against the unit to ensure proper fit.

B3X 4836 - Corner

Material : Acrylic

Features

- Acrylic corner shower base with square drain
- Designed for tiled wall application with integrated water management features
- Integrated leak proof tiling flanges and weep holes to ensure water management
- Chrome grid and complete drain assembly included (ABS or PVC available)
- Multiple drain grid finishes available to match other finishes in your bathroom
- Optimized floor design improving showering space
- Center drain location
- Available with Stabili-T anti-slip bottom meeting ADA, ANSI or CSA requirements
- Easy to clean and stain-resistant acrylic finish

B3X 4836 - 420028

SKU	Color	Configuration	Dimensions & Weight	Packaging	MSRP
420028-502-001-000	White	Center Drain / Corner Left	47 7/8” x 35 7/8” x 3” / 47 lb	9.66 ft^3	$ 1192
420028-542-001-000		Center Drain / Corner Left - Stabili-T			$ 1192

B3X 4836 - 420029

SKU	Color	Configuration	Dimensions & Weight	Packaging	MSRP
420029-503-001-000	White	Center Drain / Corner Right	47 7/8” x 35 7/8” x 3” / 47 lb	9.66 ft^3	$ 1192
420029-543-001-000		Center Drain / Corner Right - Stabili-T			$ 1192

COMMON OPTIONS

SKU	Description	MSRP
OPT20208-084	PVC drain to respect National Building Code of Canada (CAN/ULC-S102.2 flame and smoke protection) for high rise construction (included in product packaging) Available color: Chrome **(084)**	$ 97
OPT20254-173	PVC Square drain Available colors: Chrome **(084)**, Brushed Nickel **(305)**, Dark Bronze **(173)**, Matte Black **(340)** and Brushed Gold **(343)**	$ 96
OPT20254-305		$ 59
OPT20254-340		$ 96
OPT20254-343		$ 96
OPT20254-084		$ 0
OPT20253-340	ABS Square drain Available colors: Chrome **(084)**, Brushed Nickel **(305)**, Dark Bronze **(173)**, Matte Black **(340)** and Brushed gold **(343)**	$ 96
OPT20253-305		$ 59
OPT20253-343		$ 96
OPT20253-084		$ 0
OPT20253-173		$ 96

ACCESSORIES

SKU	Description	MSRP
10029133-084	PVC drain to respect National Building Code of Canada (CAN/ULC-S102.2 flame and smoke protection) for high rise construction (sold separately - grid not included) Available color: Chrome **(084)**	$ 97
10038458-305-600	Square drain grid Available colors: White **(001)**Chrome **(084)**, Dark Bronze **(173)**, Brushed Nickel **(305)**, Matte Black **(340)** and Brushed Gold **(343)**	$ 59

ACCESSORIES

SKU	Description	MSRP
10038458-084-600	Square drain grid Available colors: White **(001)**Chrome **(084)**, Dark Bronze **(173)**, Brushed Nickel **(305)**, Matte Black **(340)** and Brushed Gold **(343)**	$ 59
10038458-173-600		$ 96
10038458-340-600		$ 96
10038458-001-600		$ 96
10038458-343-600		$ 96

RECOMMENDED DOORS - VISIT OUR WEBSITE FOR A COMPLETE LIST OF RECOMMENDED DOORS

SKU	Product Name	Pag.
138996	Halo 44 ½-47 x 78 ¾ - 8mm	870
135321	Uptown 44-47 x 76 in. 8 mm	854
135323		876
135325	Uptown 45-47 x 76 in. 8 mm	907
135236	Connect Pro 45-46 ½ x 76 - 6mm	862
139578	Reveal Sleek 71 44-47 x 71 1/2 - 8mm	904
138540	Halo Pro GS 44 1/2-47 X 78 3/4 - 8mm	864
136956	Duel Alto 44-47 X 78 - 8 mm	812
136271	Duel 44-47 x 70 1/2-74	829
135870	Nebula 44 ½-46 ½ x 78 ¾ - 8mm	856
139586	Capella 78 44-47 x 78 - 8mm	878
136671	Reveal 71 44-47 x 71 ½ - 8mm	901

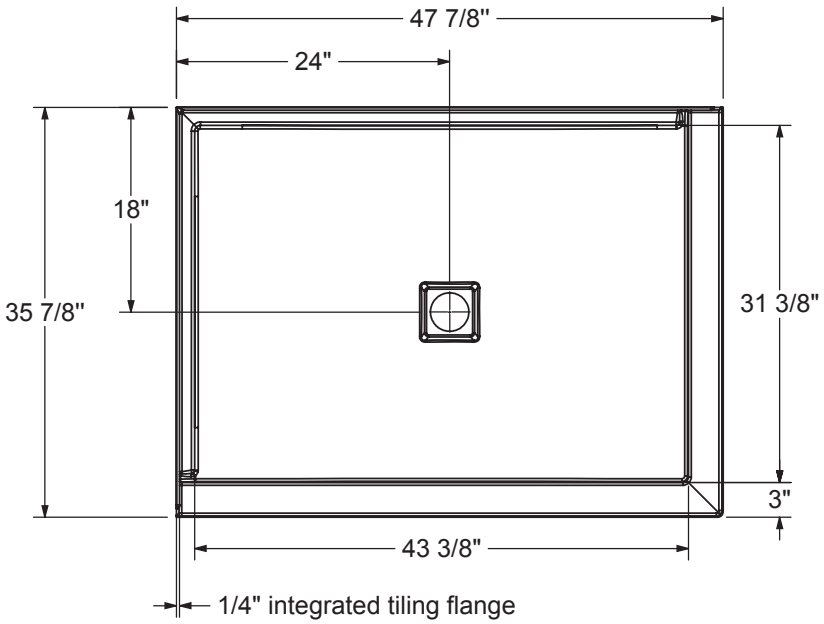

DRAIN INCLUDED

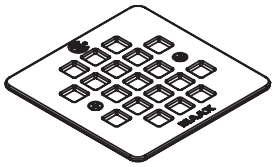

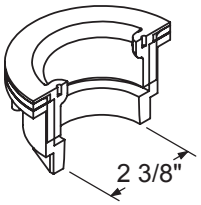

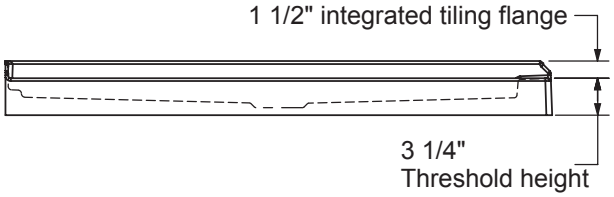

All dimensions are approximate. Structure measurements must be verified against the unit to ensure proper fit.

B3X 6032 - Alcove

Material : Acrylic

Features

- Acrylic alcove shower base with square drain
- Designed for tiled wall application with integrated water management features
- Integrated leak proof tiling flanges and weep holes to ensure water management
- Chrome grid and complete drain assembly included (ABS or PVC available)
- Multiple drain grid finishes available to match other finishes in your bathroom
- Optimized floor design improving showering space
- Left drain location
- Available with Stabili-T anti-slip bottom meeting ADA, ANSI or CSA requirements
- Easy to clean and stain-resistant acrylic finish

B3X 6032 - 420022

SKU	Color	Configuration	Dimensions & Weight	Packaging	MSRP
420022-501-001-000	White	Left Drain / Alcove	59 7/8” x 31 7/8” x 3” / 55 lb	7.79 ft^3	$ 1404
420022-541-001-000		Left Drain / Alcove - Stabili-T			$ 1404

B3X 6032 - 420023

SKU	Color	Configuration	Dimensions & Weight	Packaging	MSRP
420023-501-001-000	White	Right Drain / Alcove	59 7/8” x 31 7/8” x 3” / 55 lb	7.79 ft^3	$ 1404
420023-541-001-000		Right Drain / Alcove - Stabili-T			$ 1404

COMMON OPTIONS

SKU	Description	MSRP
OPT20208-084	PVC drain to respect National Building Code of Canada (CAN/ULC-S102.2 flame and smoke protection) for high rise construction (included in product packaging) Available color: Chrome **(084)**	$ 97
OPT20253-340	ABS Square drain Available colors: Chrome **(084)**, Brushed Nickel **(305)**, Dark Bronze **(173)**, Matte Black **(340)** and Brushed gold **(343)**	$ 96
OPT20253-305		$ 59
OPT20253-343		$ 96
OPT20253-084		$ 0
OPT20253-173		$ 96
OPT20254-173	PVC Square drain Available colors: Chrome **(084)**, Brushed Nickel **(305)**, Dark Bronze **(173)**, Matte Black **(340)** and Brushed Gold **(343)**	$ 96
OPT20254-305		$ 59
OPT20254-340		$ 96
OPT20254-343		$ 96
OPT20254-084		$ 0

ACCESSORIES

SKU	Description	MSRP
10038458-305-600	Square drain grid Available colors: White **(001)**Chrome **(084)**, Dark Bronze **(173)**, Brushed Nickel **(305)**, Matte Black **(340)** and Brushed Gold **(343)**	$ 59
10038458-084-600		$ 59
10038458-173-600		$ 96
10038458-340-600		$ 96
10038458-001-600		$ 96

ACCESSORIES

SKU	Description	MSRP
10038458-343-600	Square drain grid Available colors: White **(001)**Chrome **(084)**, Dark Bronze **(173)**, Brushed Nickel **(305)**, Matte Black **(340)** and Brushed Gold **(343)**	$ 96
10029133-084	PVC drain to respect National Building Code of Canada (CAN/ULC-S102.2 flame and smoke protection) for high rise construction (sold separately - grid not included) Available color: Chrome **(084)**	$ 97

RECOMMENDED DOORS - VISIT OUR WEBSITE FOR A COMPLETE LIST OF RECOMMENDED DOORS

SKU	Product Name	Pag.
138277	Manhattan 57-59 x 68	893
138997	Halo 56 ½-59 x 78 ¾ - 8mm	870
139353	Incognito 70 56-59 x 70 1/2 in. 8mm Shower door	833
139350	Incognito 70 56-59 x 70 1/2 in. 6mm Shower door	831
135332	Incognito 76 Shaker 56-59 x 76 in. 8mm Shower Door	837
135335	Incognito 76 56-59 x 76 in. 8mm Shower Door	839
136335	Incognito 76 Smoke 56-59 x 76 - 8mm	841
135694	Revelation Square 56-59 x 70 ½-73 - 8mm	852
136691	Revelation Round 56-59 x 70 1/2-73	846
135691	Revelation Square 56-59 x 70 ½-73 - 6mm	850
136694	Revelation Round 56-59 x 70 ½-73 - 8mm	848
135322	Uptown 56-59 x 76 in. 8 mm	854
135324		876
135326	Uptown 57-59 x 76 in. 8 mm	907
135238	Connect Pro 57-58 ½ x 76 - 6mm	862
139580	Reveal Sleek 71 56-59 x 71 1/2 - 8mm	905
138956	Halo Pro TB 56 ½-59 x 78 ¾ - 8mm	868
138952	Halo Pro 56 ½-59 x 78 ¾ - 8mm	866
138541	Halo Pro GS 56 1/2-59 X 78 3/4 - 8mm	864
136955	Duel Alto 56-59 X 78 - 8 mm	812
136272	Duel 56-58 ½ x 70 ½ x 74 - 8 mm	829
138762	Inverto 56-59 x 70 ½-74 - 8mm	843
137420	Odyssey SC 57-59 1/2 x 78 - 8 mm	874
138475	Vela 56 ½-59 x 78 ¾ - 8mm	860
135875	Nebula 56 ½-58 ½ x 78 ¾ - 8mm	856
139587	Capella 78 56-59 x 78 - 8mm	878
137832	ModulR 60 x 78 - 8mm	882
134675	Kameleon SC 55-59 x 71 - 8mm	820
134572	Kameleon 55-59 x 71 - 8mm	827
134665	Kameleon SC 55-59 x 71 - 6mm	814
134565	Kameleon 55-59 x 71 - 6mm	822
136672	Reveal 71 56-59 x 71 ½ - 8mm	901
105412	Polar 54-59 ½ x 68 in.	845

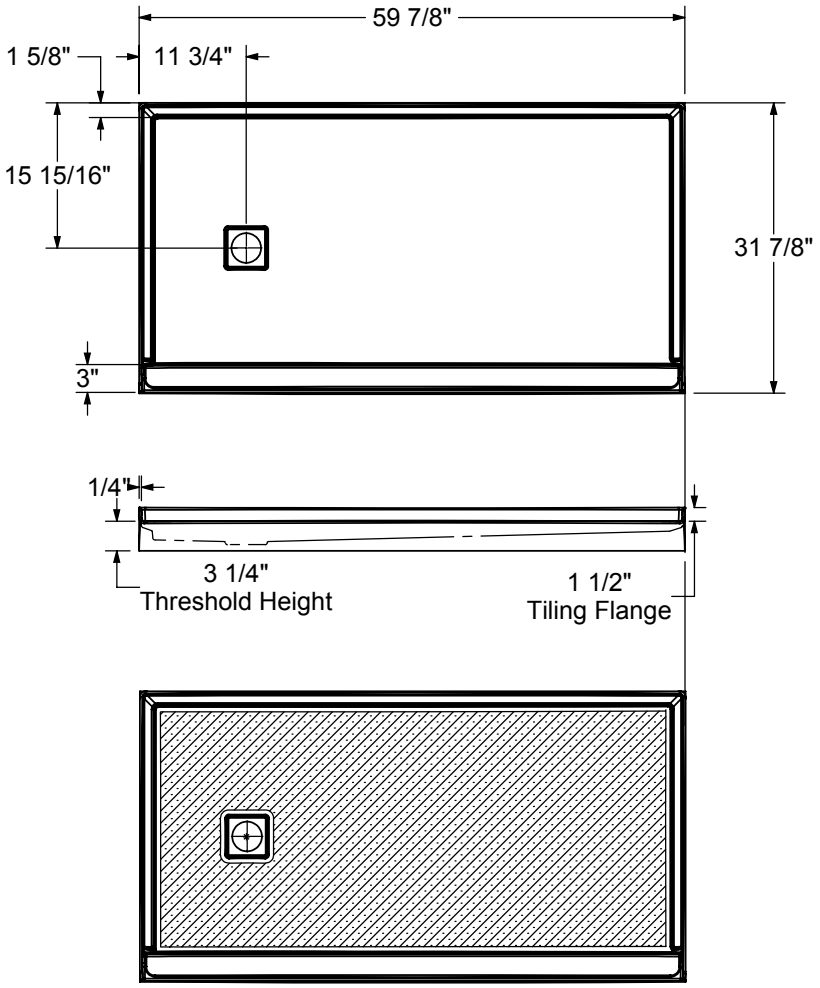

DRAIN INCLUDED ON B3X SQUARE ONLY

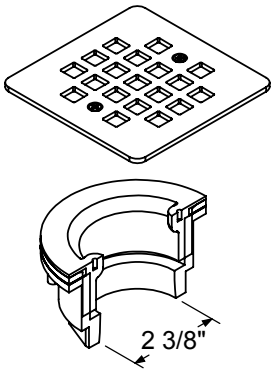

The hatched area represent the antislip surface

All dimensions are approximate. Structure measurements must be verified against the unit to ensure proper fit.

B3X 6032 - Corner

Material : Acrylic

Features

- Acrylic corner shower base with square drain
- Designed for tiled wall application with integrated water management features
- Integrated leak proof tiling flanges and weep holes to ensure water management
- Chrome grid and complete drain assembly included (ABS or PVC available)
- Multiple drain grid finishes available to match other finishes in your bathroom
- Optimized floor design improving showering space
- Left drain location
- Available with Stabili-T anti-slip bottom meeting ADA, ANSI or CSA requirements
- Easy to clean and stain-resistant acrylic finish

B3X 6032 - 420024

SKU	Color	Configuration	Dimensions & Weight	Packaging	MSRP
420024-502-001-000	White	Left Drain / Corner Left	59 7/8” x 31 7/8” x 3” / 55 lb	7.79 ft³	$ 1404
420024-542-001-000		Left Drain / Corner Left - Stabili-T			$ 1404

B3X 6032 - 420025

SKU	Color	Configuration	Dimensions & Weight	Packaging	MSRP
420025-503-001-000	White	Right Drain / Corner Right	59 7/8” x 31 7/8” x 3” / 55 lb	7.79 ft³	$ 1404
420025-543-001-000		Right Drain / Corner Right - Stabili-T			$ 1404

COMMON OPTIONS

SKU	Description	MSRP
OPT20208-084	PVC drain to respect National Building Code of Canada (CAN/ULC-S102.2 flame and smoke protection) for high rise construction (included in product packaging) Available color: Chrome **(084)**	$ 97
OPT20253-340	ABS Square drain Available colors: Chrome **(084)**, Brushed Nickel **(305)**, Dark Bronze **(173)**, Matte Black **(340)** and Brushed gold **(343)**	$ 96
OPT20253-305		$ 59
OPT20253-343		$ 96
OPT20253-084		$ 0
OPT20253-173		$ 96
OPT20254-173	PVC Square drain Available colors: Chrome **(084)**, Brushed Nickel **(305)**, Dark Bronze **(173)**, Matte Black **(340)** and Brushed Gold **(343)**	$ 96
OPT20254-305		$ 59
OPT20254-340		$ 96
OPT20254-343		$ 96
OPT20254-084		$ 0

ACCESSORIES

SKU	Description	MSRP
10029133-084	PVC drain to respect National Building Code of Canada (CAN/ULC-S102.2 flame and smoke protection) for high rise construction (sold separately - grid not included) Available color: Chrome **(084)**	$ 97
10038458-305-600	Square drain grid Available colors: White **(001)**Chrome **(084)**, Dark Bronze **(173)**, Brushed Nickel **(305)**, Matte Black **(340)** and Brushed Gold **(343)**	$ 59

Go to Table of Contents

ACCESSORIES

SKU	Description	MSRP
10038458-084-600	Square drain grid Available colors: White **(001)**Chrome **(084)**, Dark Bronze **(173)**, Brushed Nickel **(305)**, Matte Black **(340)** and Brushed Gold **(343)**	$ 59
10038458-173-600		$ 96
10038458-340-600		$ 96
10038458-001-600		$ 96
10038458-343-600		$ 96

RECOMMENDED DOORS - VISIT OUR WEBSITE FOR A COMPLETE LIST OF RECOMMENDED DOORS

SKU	Product Name	Pag.
138997	Halo 56 ½-59 x 78 ¾ - 8mm	870
135322	Uptown 56-59 x 76 in. 8 mm	854
135324		876
135326	Uptown 57-59 x 76 in. 8 mm	907
135238	Connect Pro 57-58 ½ x 76 - 6mm	862
139580	Reveal Sleek 71 56-59 x 71 1/2 - 8mm	905
138541	Halo Pro GS 56 1/2-59 X 78 3/4 - 8mm	864
136955	Duel Alto 56-59 X 78 - 8 mm	812
136272	Duel 56-58 ½ x 70 ½ x 74 - 8 mm	829
139587	Capella 78 56-59 x 78 - 8mm	878
136672	Reveal 71 56-59 x 71 ½ - 8mm	901

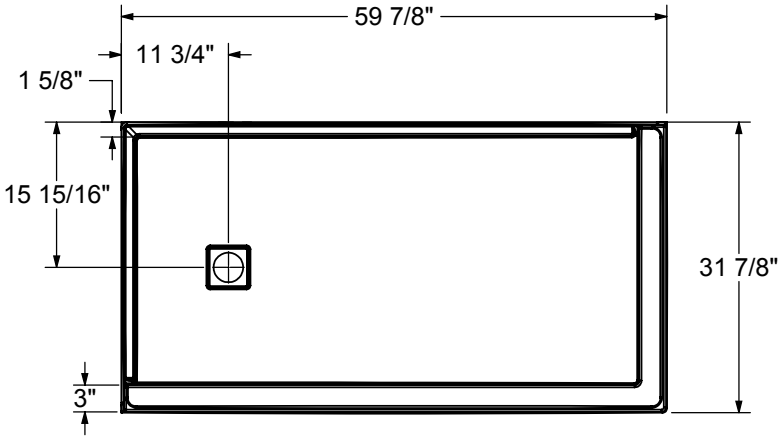

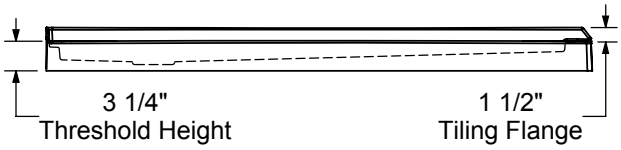

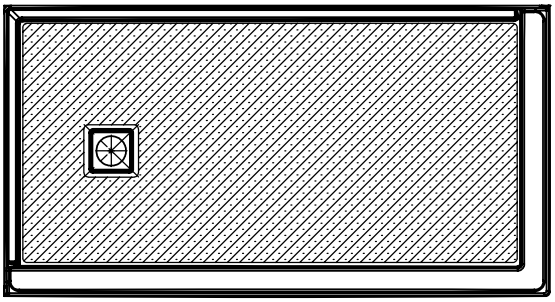

The hatched area represent the antislip surface

DRAIN INCLUDED ON B3 SQUARE ONLY

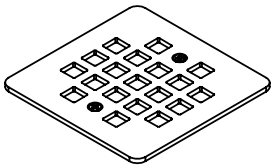

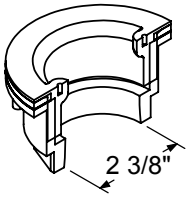

All dimensions are approximate. Structure measurements must be verified against the unit to ensure proper fit.

B3X 6036 - Alcove

Material : Acrylic

Features

- Acrylic alcove shower base with square drain
- Designed for tiled wall application with integrated water management features
- Integrated leak proof tiling flanges and weep holes to ensure water management
- Chrome grid and complete drain assembly included (ABS or PVC available)
- Multiple drain grid finishes available to match other finishes in your bathroom
- Optimized floor design improving showering space
- Center drain location
- Available with Stabili-T anti-slip bottom meeting ADA, ANSI or CSA requirements
- Easy to clean and stain-resistant acrylic finish

B3X 6036 - 420031

SKU	Color	Configuration	Dimensions & Weight	Packaging	MSRP
420031-501-001-000	White	Center Drain / Alcove	59 7/8” x 35 7/8” x 3” / 62 lb	8.32 ft^3	$ 1443
420031-541-001-000		Center Drain / Alcove - Stabili-T			$ 1443

COMMON OPTIONS

SKU	Description	MSRP
OPT20208-084	PVC drain to respect National Building Code of Canada (CAN/ULC-S102.2 flame and smoke protection) for high rise construction (included in product packaging) Available color: Chrome **(084)**	$ 97
OPT20254-173	PVC Square drain Available colors: Chrome **(084)**, Brushed Nickel **(305)**, Dark Bronze **(173)**, Matte Black **(340)** and Brushed Gold **(343)**	$ 96
OPT20254-305		$ 59
OPT20254-340		$ 96
OPT20254-343		$ 96
OPT20254-084		$ 0
OPT20253-340	ABS Square drain Available colors: Chrome **(084)**, Brushed Nickel **(305)**, Dark Bronze **(173)**, Matte Black **(340)** and Brushed gold **(343)**	$ 96
OPT20253-305		$ 59
OPT20253-343		$ 96
OPT20253-084		$ 0
OPT20253-173		$ 96

ACCESSORIES

SKU	Description	MSRP
10029133-084	PVC drain to respect National Building Code of Canada (CAN/ULC-S102.2 flame and smoke protection) for high rise construction (sold separately - grid not included) Available color: Chrome **(084)**	$ 97
10038458-305-600	Square drain grid Available colors: White **(001)**Chrome **(084)**, Dark Bronze **(173)**, Brushed Nickel **(305)**, Matte Black **(340)** and Brushed Gold **(343)**	$ 59
10038458-084-600		$ 59
10038458-173-600		$ 96
10038458-340-600		$ 96
10038458-001-600		$ 96
10038458-343-600		$ 96

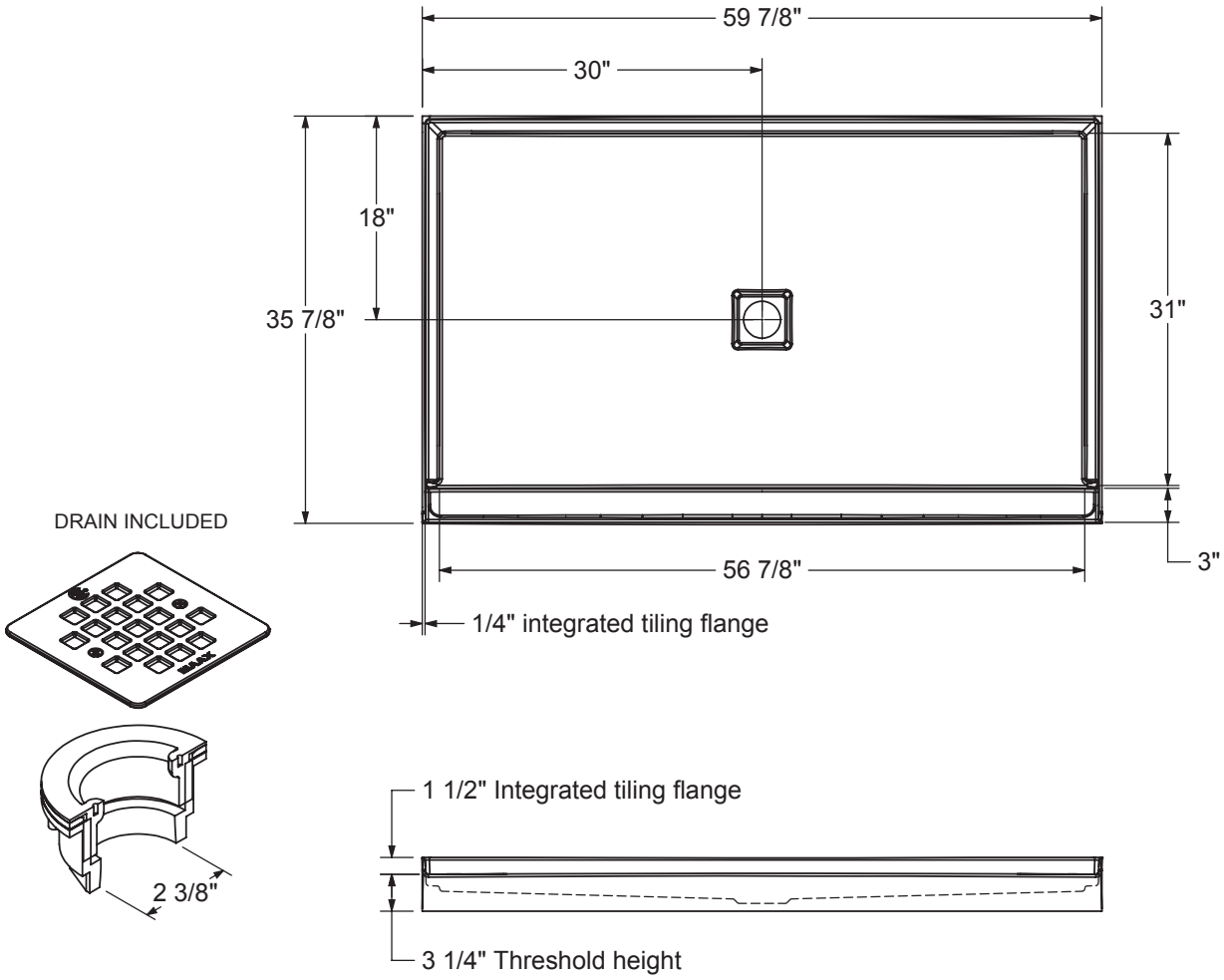

All dimensions are approximate. Structure measurements must be verified against the unit to ensure proper fit.

B3X 6036 - Corner

Material : Acrylic

Features

- Acrylic corner shower base with square drain
- Designed for tiled wall application with integrated water management features
- Integrated leak proof tiling flanges and weep holes to ensure water management
- Chrome grid and complete drain assembly included (ABS or PVC available)
- Multiple drain grid finishes available to match other finishes in your bathroom
- Optimized floor design improving showering space
- Center drain location
- Available with Stabili-T anti-slip bottom meeting ADA, ANSI or CSA requirements
- Easy to clean and stain-resistant acrylic finish

B3X 6036 - 420032

SKU	Color	Configuration	Dimensions & Weight	Packaging	MSRP
420032-502-001-000	White	Center Drain / Corner Left	59 7/8” x 35 7/8” x 3” / 62 lb	8.32 ft^3	$ 1443
420032-542-001-000		Center Drain / Corner Left - Stabili-T			$ 1443

B3X 6036 - 420033

SKU	Color	Configuration	Dimensions & Weight	Packaging	MSRP
420033-503-001-000	White	Center Drain / Corner Right	59 7/8” x 35 7/8” x 3” / 62 lb	8.32 ft^3	$ 1443
420033-543-001-000		Center Drain / Corner Right - Stabili-T			$ 1443

COMMON OPTIONS

SKU	Description	MSRP
OPT20254-173	PVC Square drain Available colors: Chrome **(084)**, Brushed Nickel **(305)**, Dark Bronze **(173)**, Matte Black **(340)** and Brushed Gold **(343)**	$ 96
OPT20254-305		$ 59
OPT20254-340		$ 96
OPT20254-343		$ 96
OPT20254-084		$ 0
OPT20208-084	PVC drain to respect National Building Code of Canada (CAN/ULC-S102.2 flame and smoke protection) for high rise construction (included in product packaging) Available color: Chrome **(084)**	$ 97
OPT20253-340	ABS Square drain Available colors: Chrome **(084)**, Brushed Nickel **(305)**, Dark Bronze **(173)**, Matte Black **(340)** and Brushed gold **(343)**	$ 96
OPT20253-305		$ 59
OPT20253-343		$ 96
OPT20253-084		$ 0
OPT20253-173		$ 96

ACCESSORIES

SKU	Description	MSRP
10029133-084	PVC drain to respect National Building Code of Canada (CAN/ULC-S102.2 flame and smoke protection) for high rise construction (sold separately - grid not included) Available color: Chrome **(084)**	$ 97
10038458-305-600	Square drain grid Available colors: White **(001)**Chrome **(084)**, Dark Bronze **(173)**, Brushed Nickel **(305)**, Matte Black **(340)** and Brushed Gold **(343)**	$ 59

ACCESSORIES

SKU	Description	MSRP
10038458-084-600	Square drain grid Available colors: White **(001)**Chrome **(084)**, Dark Bronze **(173)**, Brushed Nickel **(305)**, Matte Black **(340)** and Brushed Gold **(343)**	$ 59
10038458-173-600		$ 96
10038458-340-600		$ 96
10038458-001-600		$ 96
10038458-343-600		$ 96

RECOMMENDED DOORS - VISIT OUR WEBSITE FOR A COMPLETE LIST OF RECOMMENDED DOORS

SKU	Product Name	Pag.
138997	Halo 56 ½-59 x 78 ¾ - 8mm	870
135322	Uptown 56-59 x 76 in. 8 mm	854
135324		876
135326	Uptown 57-59 x 76 in. 8 mm	907
135238	Connect Pro 57-58 ½ x 76 - 6mm	862
139580	Reveal Sleek 71 56-59 x 71 1/2 - 8mm	905
138541	Halo Pro GS 56 1/2-59 X 78 3/4 - 8mm	864
136955	Duel Alto 56-59 X 78 - 8 mm	812
136272	Duel 56-58 ½ x 70 ½ x 74 - 8 mm	829
135875	Nebula 56 ½-58 ½ x 78 ¾ - 8mm	856
139587	Capella 78 56-59 x 78 - 8mm	878
136672	Reveal 71 56-59 x 71 ½ - 8mm	901

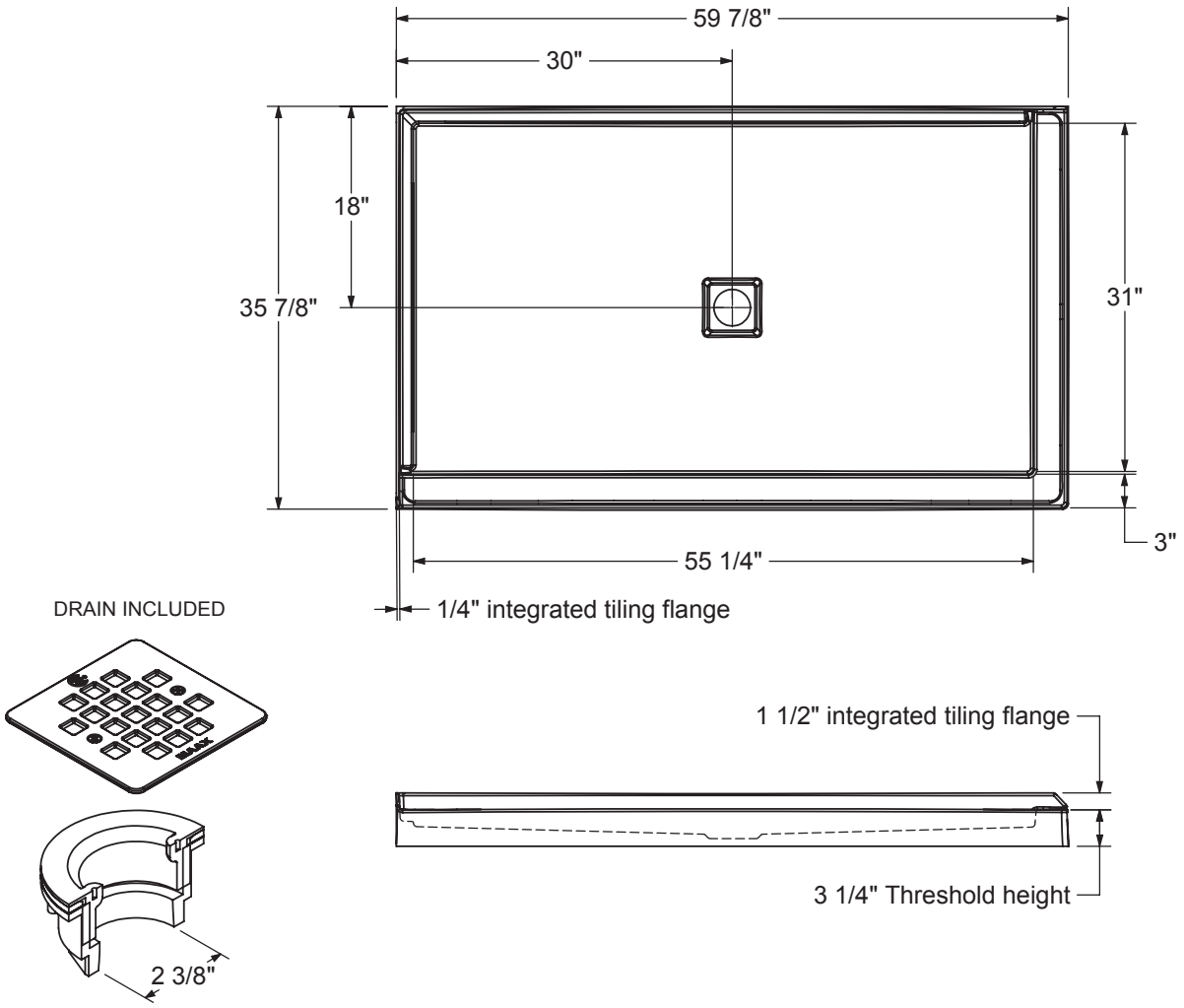

All dimensions are approximate. Structure measurements must be verified against the unit to ensure proper fit.

Fossil 6036 Base

Material : NaturalStone

Features

- Crafted from genuine natural stone for superior durability and a spa-inspired look that elevates any bathroom.
- Includes glue-on tiling flange for a watertight seal and simplified tile installation
- End drain allowing a reversible installation for a right-hand or a left-hand drain
- Versatile installation that can be configured for either alcove or corner setups to suit various layouts.
- Non AFR (Above-the-Floor Rough)
- Barrier free installation safe and easy step-through entrance and exit
- Fit any standard drains (drain not included)
- Textured natural stone finish provides a slip-resistant surface that's resistant to scratching, dulling, and fading.
- Color-matched square drain cover included for a seamless, finished appearance.

FOSSIL 6036 - 106881

SKU	Color	Configuration	Dimensions & Weight	Packaging	MSRP
106881-526-905-000	Graphite	End Drain / No Seat Seat / Alcove or Corner	59 7/8" x 35 7/8" x 1 3/8" / 81 lb	4.1 ft^3	$ 3066

RECOMMENDED DOORS - VISIT OUR WEBSITE FOR A COMPLETE LIST OF RECOMMENDED DOORS

SKU	Product Name	Pag.
138277	Manhattan 57-59 x 68	893
138997	Halo 56 ½-59 x 78 ¾ - 8mm	870
139353	Incognito 70 56-59 x 70 1/2 in. 8mm Shower door	833
139350	Incognito 70 56-59 x 70 1/2 in. 6mm Shower door	831
135332	Incognito 76 Shaker 56-59 x 76 in. 8mm Shower Door	837
135335	Incognito 76 56-59 x 76 in. 8mm Shower Door	839
136335	Incognito 76 Smoke 56-59 x 76 - 8mm	841
135694	Revelation Square 56-59 x 70 ½-73 - 8mm	852
136691	Revelation Round 56-59 x 70 1/2-73	846
135691	Revelation Square 56-59 x 70 ½-73 - 6mm	850
136694	Revelation Round 56-59 x 70 ½-73 - 8mm	848
135322	Uptown 56-59 x 76 in. 8 mm	854
135324		876
135326	Uptown 57-59 x 76 in. 8 mm	907
135238	Connect Pro 57-58 ½ x 76 - 6mm	862
139580	Reveal Sleek 71 56-59 x 71 1/2 - 8mm	905
138956	Halo Pro TB 56 ½-59 x 78 ¾ - 8mm	868
138952	Halo Pro 56 ½-59 x 78 ¾ - 8mm	866
138541	Halo Pro GS 56 1/2-59 X 78 3/4 - 8mm	864
136955	Duel Alto 56-59 X 78 - 8 mm	812
136272	Duel 56-58 ½ x 70 ½ x 74 - 8 mm	829
138762	Inverto 56-59 x 70 ½-74 - 8mm	843
137420	Odyssey SC 57-59 1/2 x 78 - 8 mm	874
138475	Vela 56 ½-59 x 78 ¾ - 8mm	860
135875	Nebula 56 ½-58 ½ x 78 ¾ - 8mm	856

BASE MODEL/ MODELE DE BASE

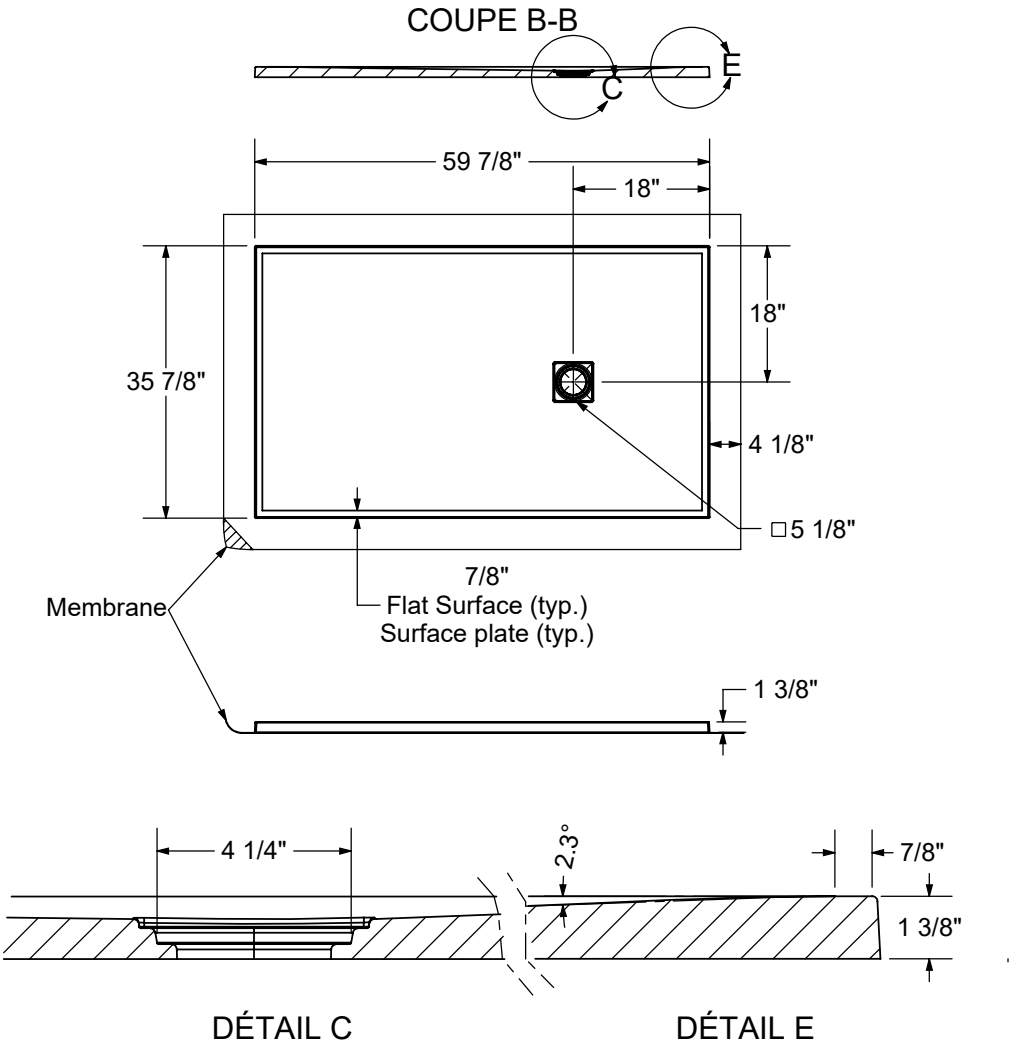

- All dimensions are approximate/Les dimensions sont approximatives
- Structure measurements must be verified against the unit to ensure proper fit/Dimensions de l'unité doivent être vérifié avant l'installation
- Installation to be completed in accordance with manufacturers specifications/Installation doit être faite selon les instructions du manufacturier
- Do not scale drawings/Ne pas mettre à l'échelle les dessins

Neo-angle Base 36 - 3 in

Material : Acrylic

Features

- Low threshold base
- Corner drain; textured bottom
- Deflecting strip preventing water penetration behind the shower
- Corner installation
- Easy front installation walls with snap clips are available

NEO-ANGLE BASE 36 - 3 IN - 101422

SKU	Color	Configuration	Dimensions & Weight	Packaging	MSRP
101422-000-001-000	White	Corner Drain / Corner Left or Right	36 1/8” x 36 1/8” x 3” / 36 lb	8.93 ft^3	$ 812

RECOMMENDED DOORS - VISIT OUR WEBSITE FOR A COMPLETE LIST OF RECOMMENDED DOORS

SKU	Product Name	Pag.
137440	Radia Neo-angle 36 x 36 x 71 ½ - 6mm	951

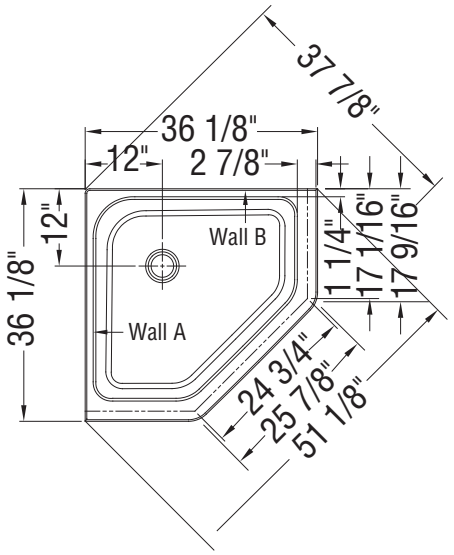

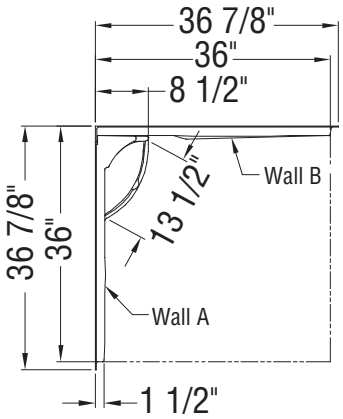

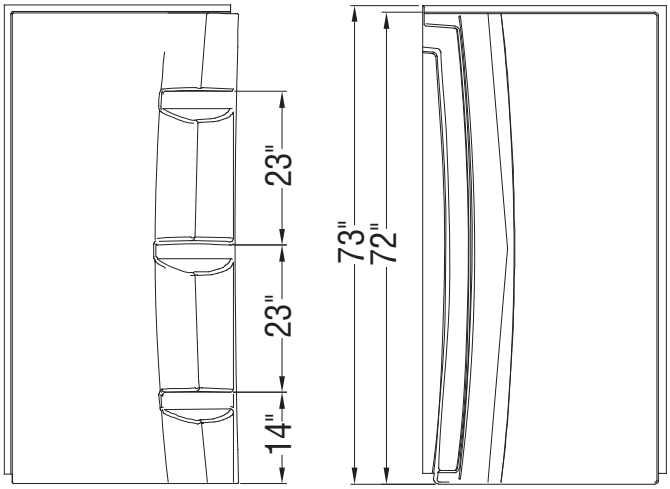

Wall A **Wall B**

All dimensions are approximate. Structure measurements must be verified against the unit to ensure proper fit.

Neo-angle Base 38 - 3 in

Material : Acrylic

Features

- Proudly made in Canada
- Direct to stud corner installation that will save time and money
- Durable high shine acrylic stays warm to the touch and is easy to clean
- 3-inch low threshold for easy access
- Textured bottom for added safety
- Walls with convenient foot rest available, designed to be easier to clean
- Ensure fit with MAAX Radia Corner Door # 137441-900

NEO-ANGLE BASE 38 - 3 IN - 101423

SKU	Color	Configuration	Dimensions & Weight	Packaging	MSRP
101423-000-001-000	White	Corner Drain / Corner Left or Right	38 1/8” x 38 1/8” x 3” / 38 lb	8.93 ft^3	$ 898

RECOMMENDED DOORS - VISIT OUR WEBSITE FOR A COMPLETE LIST OF RECOMMENDED DOORS

SKU	Product Name	Pag.
137441	Radia Neo-angle 38 x 38 x 71 ½ - 6mm	971

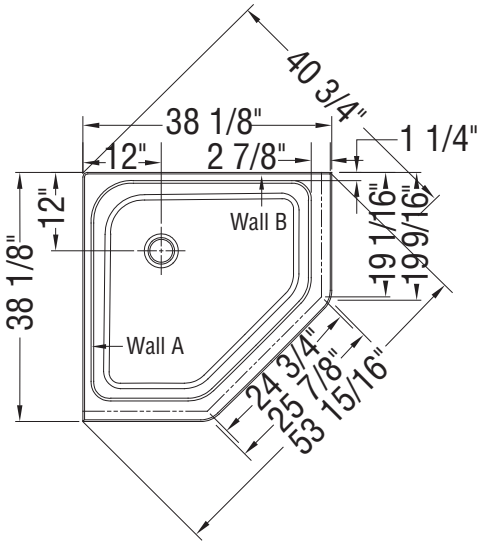

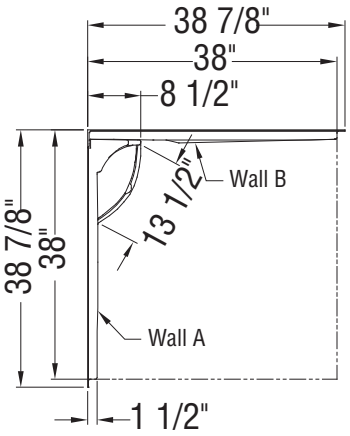

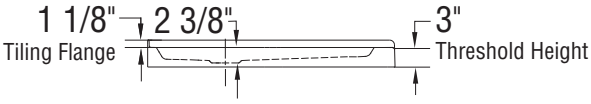

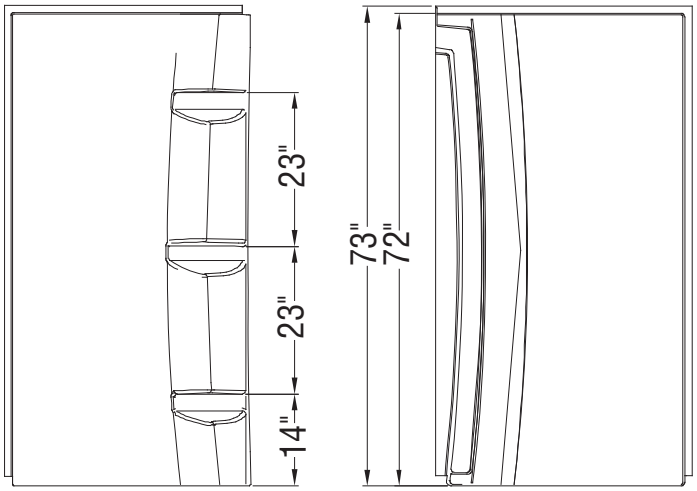

Wall A **Wall B**

All dimensions are approximate. Structure measurements must be verified against the unit to ensure proper fit.

Neo-angle Base 40 - 3 in

Material : Acrylic

Features

- Direct to stud corner installation that will save time and money
- Durable high shine acrylic stays warm to the touch and is easy to clean
- 3-inch low threshold for easy access
- Textured bottom for added safety
- Walls with convenient foot rest available, designed to be easier to clean
- Ensure fit with MAAX Radia Corner Door # 137442-900

NEO-ANGLE BASE 40 - 3 IN - 101424

SKU	Color	Configuration	Dimensions & Weight	Packaging	MSRP
101424-000-001-000	White	Corner Drain / Corner Left or Right	40 1/8” x 40 1/8” x 3” / 40 lb	9.9 ft^3	$ 1023

RECOMMENDED DOORS - VISIT OUR WEBSITE FOR A COMPLETE LIST OF RECOMMENDED DOORS

SKU	Product Name	Pag.
137442	Radia Neo-angle 40 x 40 x 71 ½ - 6mm	951

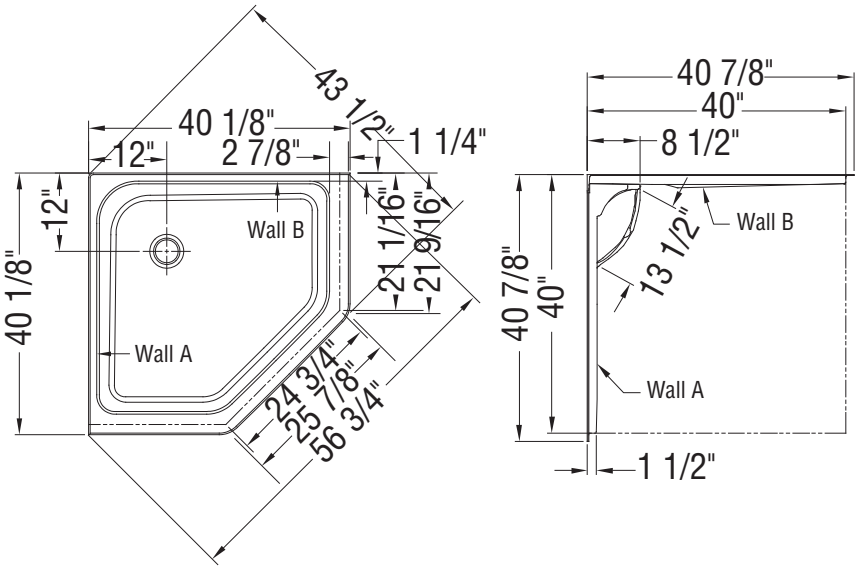

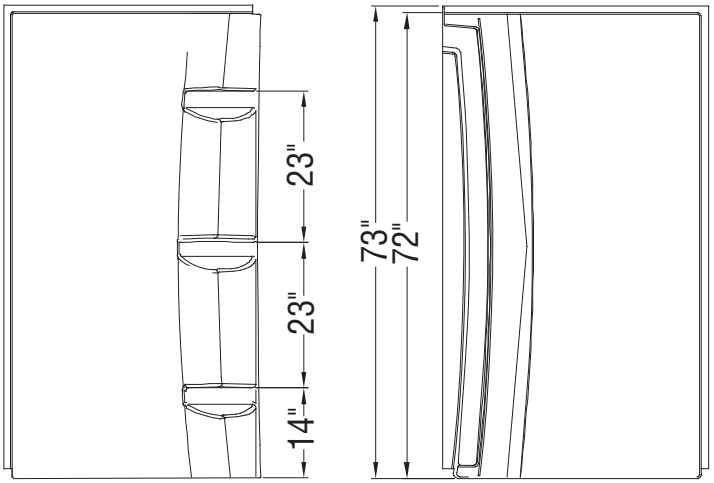

Wall A **Wall B**

All dimensions are approximate. Structure measurements must be verified against the unit to ensure proper fit.

Neo-angle Base 42 - 3 in

Material : Acrylic

Features

- Proudly made in Canada
- 42x42 Acrylic Neo-Angle Base with Corner Drain in White, direct to stud installation
- 3 in. low threshold
- Durable high shine acrylic stays warm to the touch and is easy to clean, available in white only
- Textured bottom
- Off-center drain - consult MAAX technical drawing (specification) for exact dimensions
- Limited warranty is for a period of 25 years, phone # 1-877-GET-MAAX

NEO-ANGLE BASE 42 - 3 IN - 101425

SKU	Color	Configuration	Dimensions & Weight	Packaging	MSRP
101425-000-001-000	White	Corner Drain / Corner Left or Right	42 1/8” x 42 1/8” x 3” / 42 lb	9.9 ft^3	$ 1110

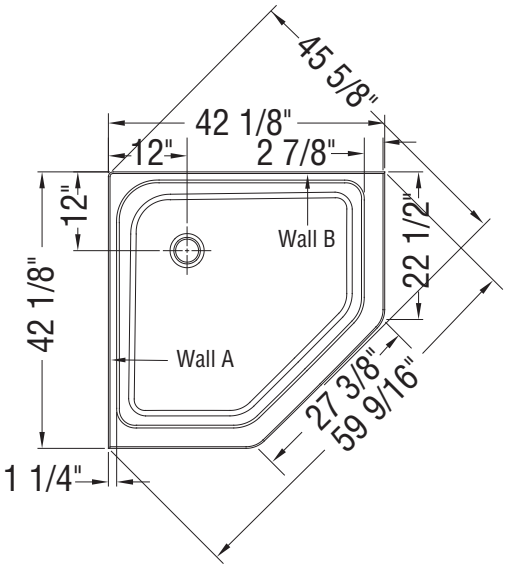

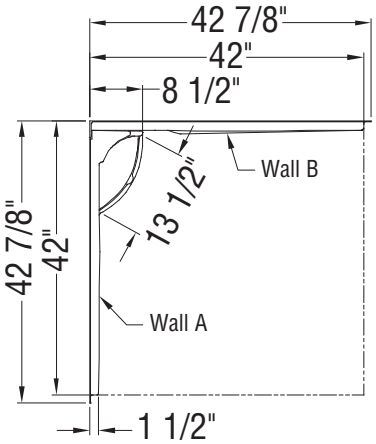

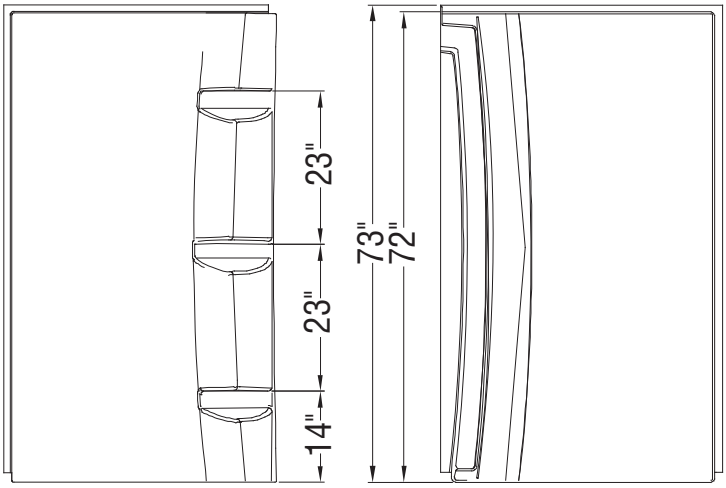

Wall A **Wall B**

All dimensions are approximate. Structure measurements must be verified against the unit to ensure proper fit.

Go to Table of Contents

Neo-round Base 32 - 3 in

Material : Acrylic

Features

- Direct to stud corner installation that will save time and money
- Durable high shine acrylic stays warm to the touch and is easy to clean
- 3-inch low threshold for easy access
- Textured bottom for added safety
- Walls with convenient foot rest available, designed to be easier to clean
- Ensure fit with MAAX Radia Corner Door # 137443-900

NEO-ROUND BASE 32 - 3 IN - 101426

SKU	Color	Configuration	Dimensions & Weight	Packaging	MSRP
101426-000-001-000	White	Corner Drain / Corner Left or Right	32 1/8” x 32 1/8” x 3” / 32 lb	6 ft^3	$ 745

RECOMMENDED DOORS - VISIT OUR WEBSITE FOR A COMPLETE LIST OF RECOMMENDED DOORS

SKU	Product Name	Pag.
137443	Radia Neo-round 32 x 32 x 71 ½ - 6mm	953

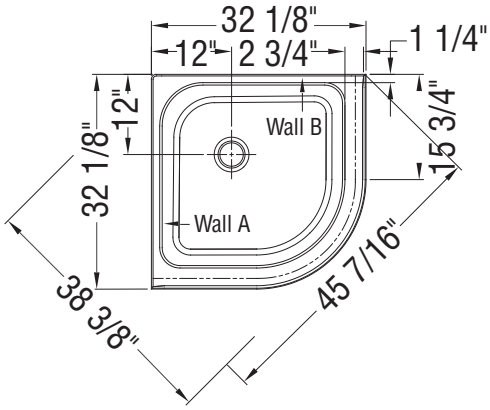

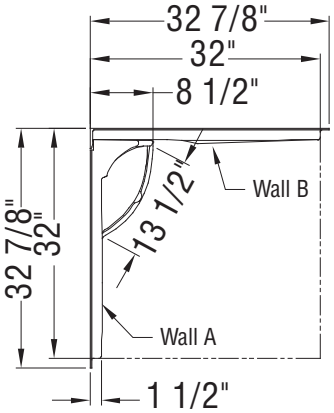

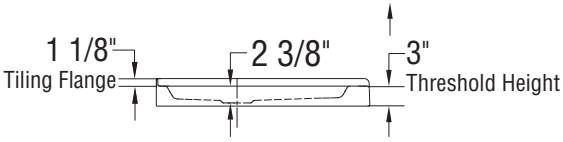

Important

Center your plumbing in the highlighted area. Exact plumbing position may vary upon model specifications, please refer to the supplier's instructions for more details

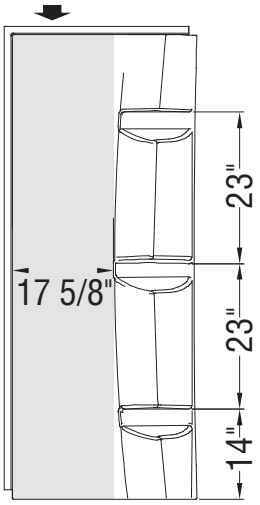

Wall A

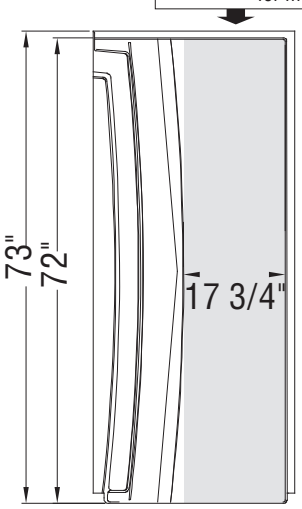

Wall B

All dimensions are approximate. Structure measurements must be verified against the unit to ensure proper fit.

Neo-round Base 36 - 3 in

Material : Acrylic

Features

- Proudly made in Canada
- Direct to stud corner installation that will save time and money
- Durable high shine acrylic stays warm to the touch and is easy to clean
- 3-inch low threshold for easy access
- Textured bottom for added safety
- Walls with convenient foot rest available, designed to be easier to clean
- Ensure fit with MAAX Radia Corner Door # 137444-900

NEO-ROUND BASE 36 - 3 IN - 101427

SKU	Color	Configuration	Dimensions & Weight	Packaging	MSRP
101427-000-001-000	White	Corner Drain / Corner Left or Right	36 1/8” x 36 1/8” x 3” / 36 lb	8.93 ft^3	$ 812

RECOMMENDED DOORS - VISIT OUR WEBSITE FOR A COMPLETE LIST OF RECOMMENDED DOORS

SKU	Product Name	Pag.
137444	Radia Neo-round 36 x 36 x 71 ½ - 6mm	953

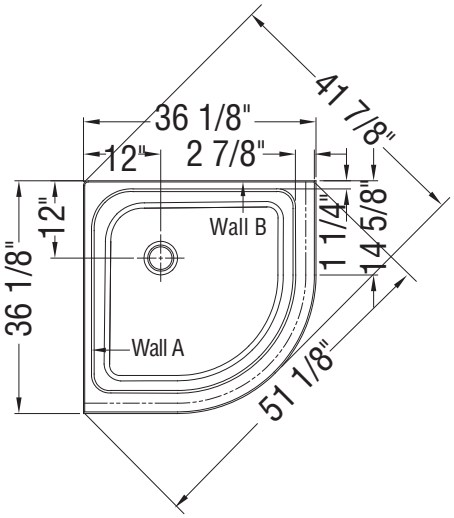

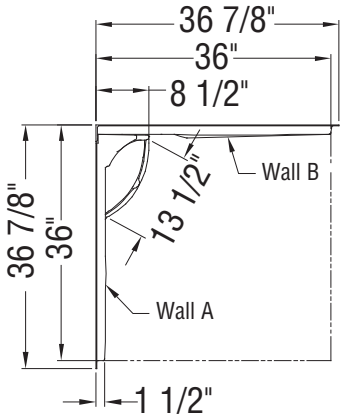

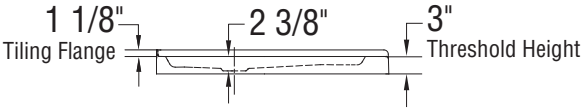

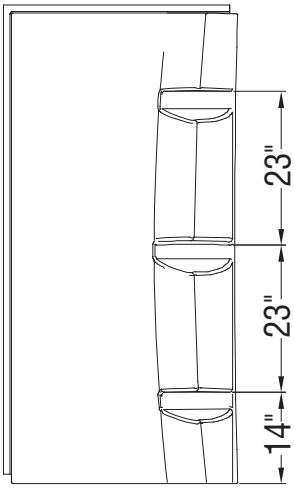

Wall A

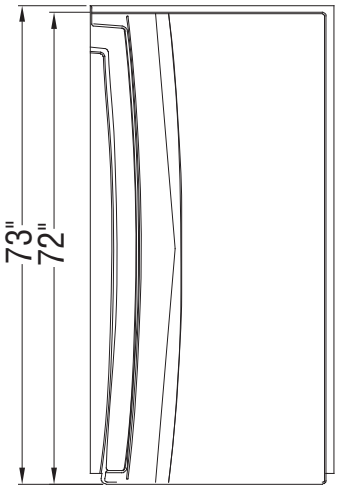

Wall B

All dimensions are approximate. Structure measurements must be verified against the unit to ensure proper fit.

Go to Table of Contents

Neo-round Base 40 - 3 in

Material : Acrylic

Features

- Direct to stud corner installation that will save time and money
- Durable high shine acrylic stays warm to the touch and is easy to clean
- 3-inch low threshold for easy access
- Textured bottom for added safety
- Walls with convenient foot rest available, designed to be easier to clean
- Ensure fit with MAAX Radia Corner Door # 137445-900

NEO-ROUND BASE 40 - 3 IN - 101428

SKU	Color	Configuration	Dimensions & Weight	Packaging	MSRP
101428-000-001-000	White	Corner Drain / Corner Left or Right	40 1/8” x 40 1/8” x 3” / 40 lb	8.93 ft^3	$ 1023

RECOMMENDED DOORS - VISIT OUR WEBSITE FOR A COMPLETE LIST OF RECOMMENDED DOORS

SKU	Product Name	Pag.
137445	Radia Neo-round 40 x 40 x 71 ½ - 6mm	953

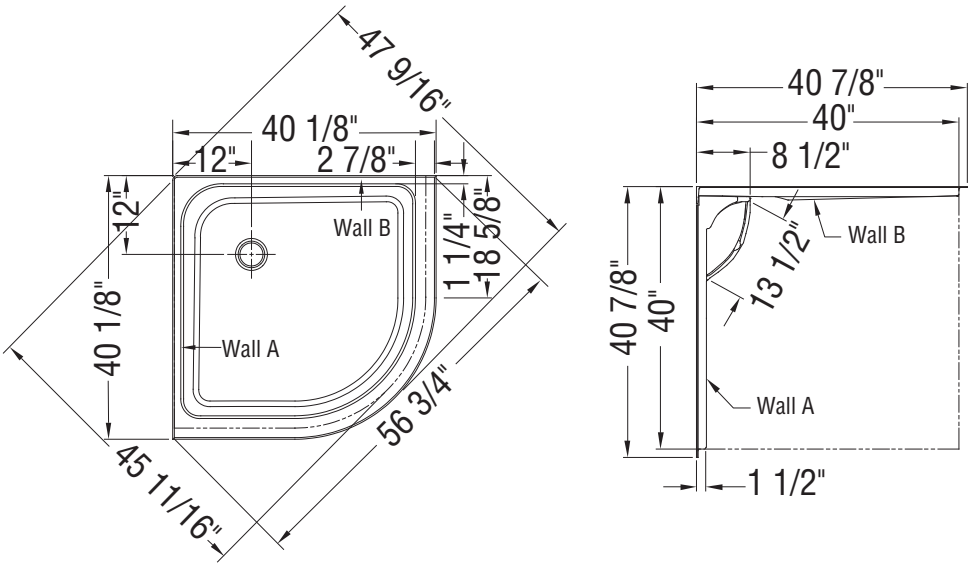

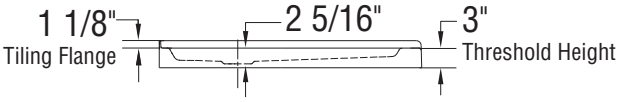

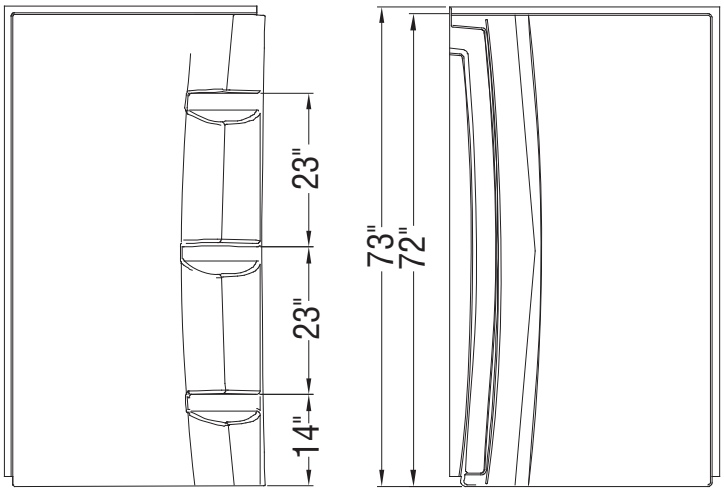

Wall A **Wall B**

All dimensions are approximate. Structure measurements must be verified against the unit to ensure proper fit.

Go to Table of Contents

Rectangular Base 6036 - Corner L/R - 3 in.

Material : Acrylic

Features

- 60x36 Acrylic Alcove Shower Base with Left-Hand Drain in White, direct to stud installation
- 3 in. low threshold
- Durable high shine acrylic stays warm to the touch and is easy to clean
- Textured bottom
- Limited warranty is for a period of 25 years, phone # 1-877-GET-MAAX

RECTANGULAR BASE 6036 - CORNER L/R - 3 IN. - 105594

SKU	Color	Configuration	Dimensions & Weight	Packaging	MSRP
105594-000-001-001	White	Left Drain / Corner Left or Right	59 3/4” x 36 1/4” x 3” / 58 lb	12 ft^3	$ 1320
105594-000-001-002		Right Drain / Corner Left or Right			$ 1320

RECOMMENDED DOORS - VISIT OUR WEBSITE FOR A COMPLETE LIST OF RECOMMENDED DOORS

SKU	Product Name	Pag.
138997	Halo 56 ½-59 x 78 ¾ - 8mm	870
135322	Uptown 56-59 x 76 in. 8 mm	854
135324		876
135326	Uptown 57-59 x 76 in. 8 mm	907
135238	Connect Pro 57-58 ½ x 76 - 6mm	862
139580	Reveal Sleek 71 56-59 x 71 1/2 - 8mm	905
138541	Halo Pro GS 56 1/2-59 X 78 3/4 - 8mm	864
136955	Duel Alto 56-59 X 78 - 8 mm	812
136272	Duel 56-58 ½ x 70 ½ x 74 - 8 mm	829
135875	Nebula 56 ½-58 ½ x 78 ¾ - 8mm	856
139587	Capella 78 56-59 x 78 - 8mm	878
136672	Reveal 71 56-59 x 71 ½ - 8mm	901

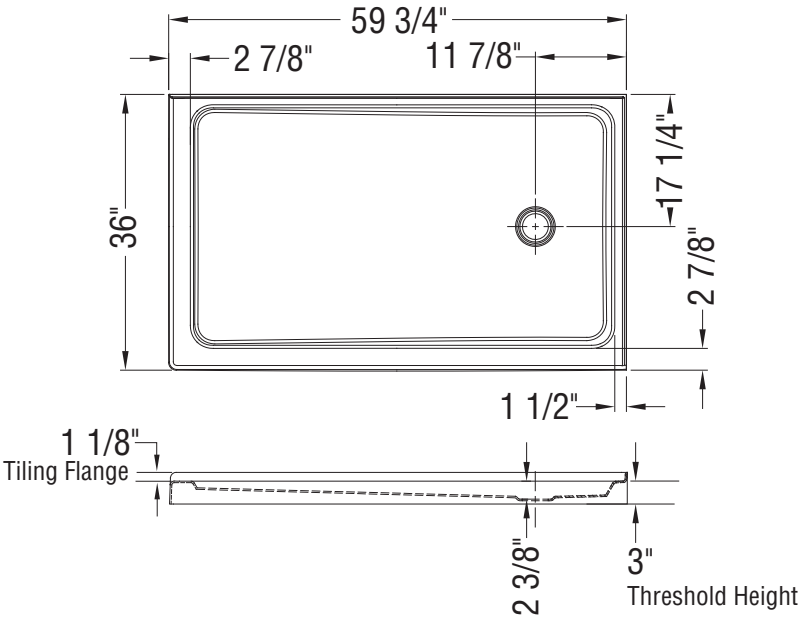

All dimensions are approximate. Structure measurements must be verified against the unit to ensure proper fit.

Roka 3232

Material : Acrylic

Features

- Base can be installed in a left or right corner
- Thermoformed cast Acrylic for improved durability
- Textured bottom for added safety
- Easy to clean and stain-resistant acrylic finish
- Low threshold for safe and easy step-through entrance and exit
- 1-piece contruction with integrated flanges for easy installation
- Sleek design adds a modern look to any bathroom
- Installed directy to the studs for a long-lasting and secure installation
- Available in different sizes to fit your bathroom needs

ROKA 3232 - 107331

SKU	Color	Configuration	Dimensions & Weight	Packaging	MSRP
107331-000-001-000	White	Corner Drain / Corner Left or Right	32” x 32” x 3” / 30 lb	3.19 ft^3	$ 898
107331-000-015-000	Black				$ 986

STANDARD

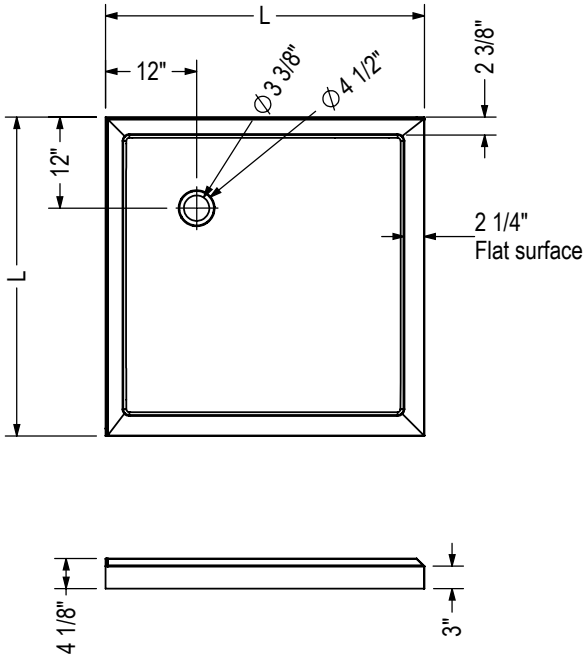

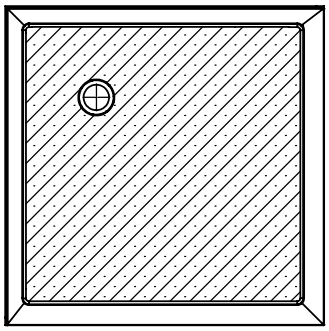

The hatched area represent the anti-slip surface

Code	Description	L
107331	ROKA BASE 3232	32"
107332	ROKA BASE 3636	36"
107333	ROKA BASE 4242	42"

All dimensions are approximate. Structure measurements must be verified against the unit to ensure proper fit.

Roka 3636

Material : Acrylic

Features

- Base can be installed in a left or right corner
- Thermoformed cast acrylic for improved durability
- Textured bottom for added safety
- Easy to clean and stain-resistant acrylic finish
- Low threshold for safe and easy step-through entrance and exit
- 1-piece contruction with integrated flanges for easy installation
- Compatible with MAAX Utile walls
- Installed directy to the studs for a long-lasting and secure installation
- Available in different sizes to fit your bathroom needs

ROKA 3636 - 107332

SKU	Color	Configuration	Dimensions & Weight	Packaging	MSRP
107332-000-001-000	White	Corner Drain / Corner Left or Right	36” x 36” x 3” / 36 lb	4.6 ft^3	$ 1071
107332-000-015-000	Black				$ 1179

RECOMMENDED DOORS - VISIT OUR WEBSITE FOR A COMPLETE LIST OF RECOMMENDED DOORS

SKU	Product Name	Pag.
139575	Reveal Sleek 71 32 1/2-35 1/2 x 71 1/2 - 8mm	904
136676	Reveal 71 32 ½-35 ½ x 71 ½ - 8mm	901

STANDARD

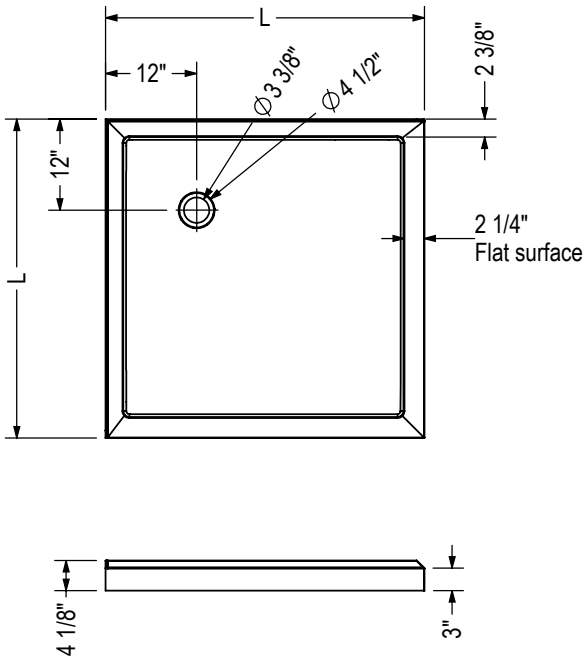

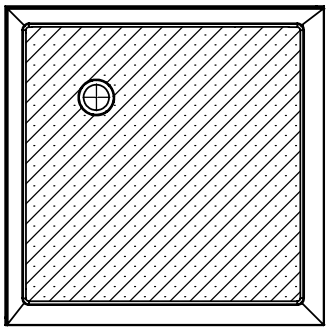

The hatched area represent the anti-slip surface

Code	Description	L
107331	ROKA BASE 3232	32"
107332	ROKA BASE 3636	36"
107333	ROKA BASE 4242	42"

All dimensions are approximate. Structure measurements must be verified against the unit to ensure proper fit.

Go to Table of Contents

Roka 4242

Material : Acrylic

Features

- Base can be installed in a left or right corner
- Thermoformed cast Acrylic for improved durability
- Textured bottom for added safety
- Easy to clean and stain-resistant acrylic finish
- Low threshold for safe and easy step-through entrance and exit
- 1-piece contruction with integrated flanges for easy installation
- Compatible with MAAX walls
- Installed directy to the studs for a long-lasting and secure installation
- Available in different sizes to fit your bathroom needs

ROKA 4242 - 107333

SKU	Color	Configuration	Dimensions & Weight	Packaging	MSRP
107333-000-001-000	White	Corner Drain / Corner Left or Right	42” x 42” x 3” / 51 lb	5.27 ft^3	$ 1231
107333-000-015-000	Black				$ 1355

STANDARD

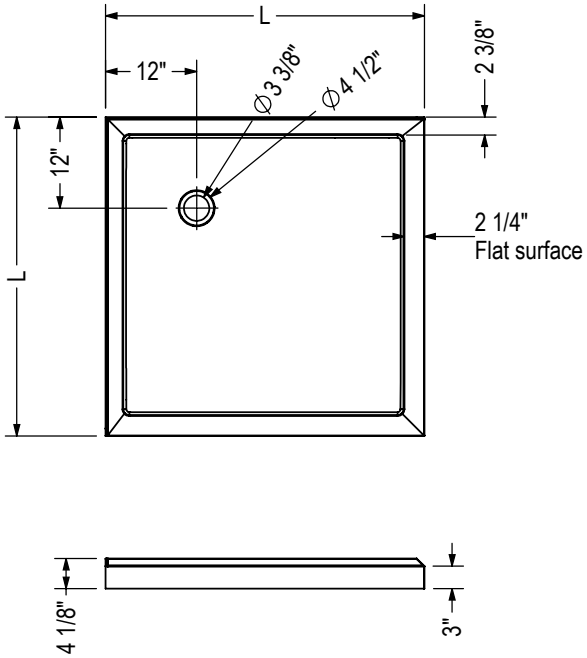

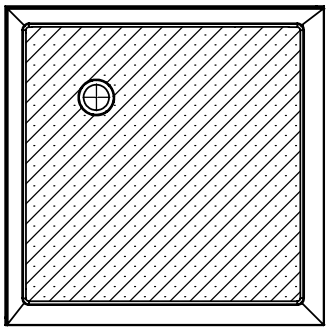

The hatched area represent the anti-slip surface

Code	Description	L
107331	ROKA BASE 3232	32"
107332	ROKA BASE 3636	36"
107333	ROKA BASE 4242	42"

All dimensions are approximate. Structure measurements must be verified against the unit to ensure proper fit.

Go to Table of Contents

Round Base 36 - 3 in

Material : Acrylic

Features

- Low threshold base
- Corner drain; textured bottom
- Deflecting strip preventing water penetration behind the shower
- Corner installation
- Easy front installation walls with snap clips are available

ROUND BASE 36 - 3 IN - 101429

SKU	Color	Configuration	Dimensions & Weight	Packaging	MSRP
101429-000-001-000	White	Corner Drain / Corner Left or Right	36 1/8” x 36 1/8” x 3” / 36 lb	8.93 ft^3	$ 1069

RECOMMENDED DOORS - VISIT OUR WEBSITE FOR A COMPLETE LIST OF RECOMMENDED DOORS

SKU	Product Name	Pag.
137446	Radia Round 36 x 36 x 71 ½ - 6mm	955

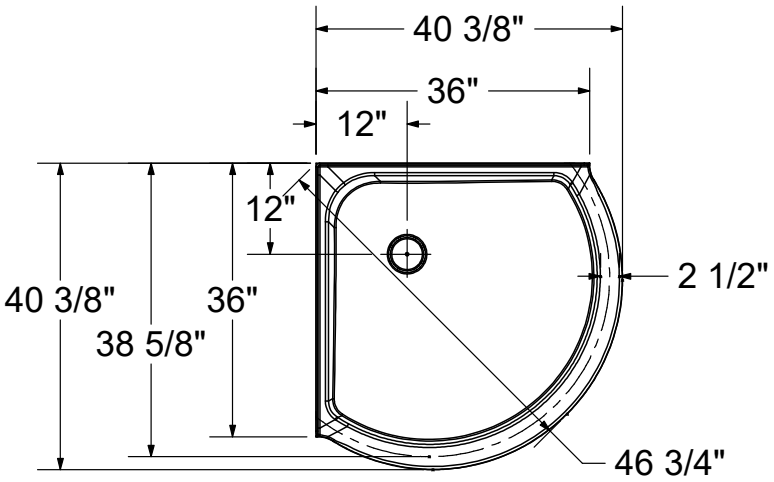

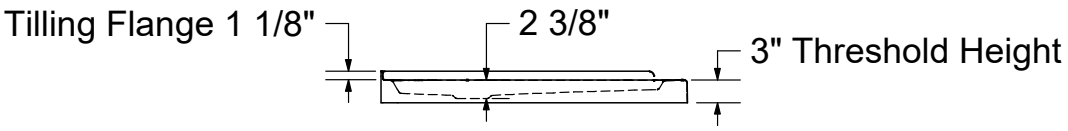

All dimensions are approximate. Structure measurements must be verified against the unit to ensure proper fit.

Square Base 32 - Corner - 3 in

Material : Acrylic

Features

- Direct to stud corner installation that will save time and money
- Durable high shine acrylic stays warm to the touch and is easy to clean
- 3-inch low threshold for easy access
- Textured bottom for added safety
- Walls with convenient foot rest available, designed to be easier to clean
- Ensure fit with MAAX Radia Corner Door # 137447-900

SQUARE BASE 32 - CORNER - 3 IN - 101431

SKU	Color	Configuration	Dimensions & Weight	Packaging	MSRP
101431-000-001-000	White	Corner Drain / Corner Left or Right	32 1/8” x 32 1/8” x 3” / 30 lb	6 ft^3	$ 745

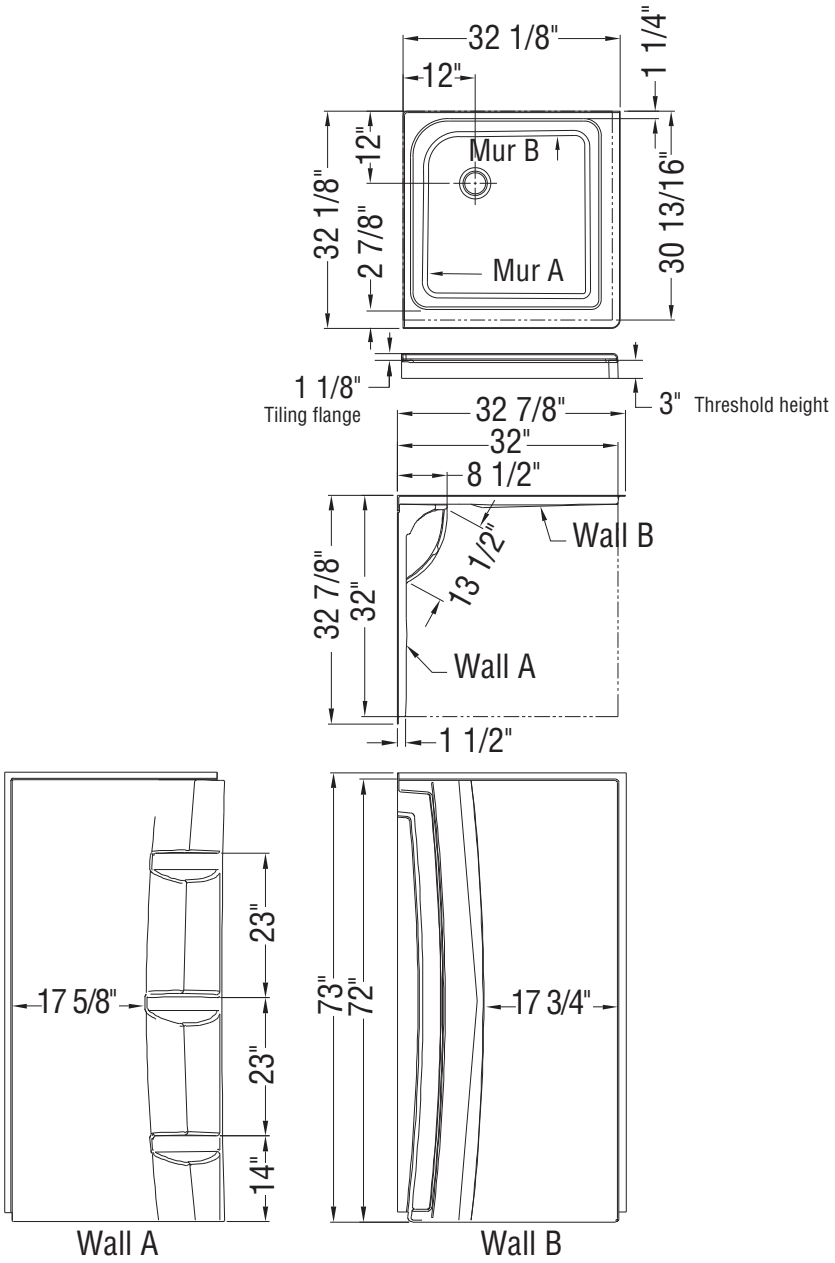

All dimensions are approximate. Structure measurements must be verified against the unit to ensure proper fit.

Square Base 36 - Corner - 3 in

Material : Acrylic

Features

- Direct to stud corner installation that will save time and money
- Durable high shine acrylic stays warm to the touch and is easy to clean
- 3-inch low threshold for easy access
- Textured bottom for added safety
- Walls with convenient foot rest available, designed to be easier to clean
- Ensure fit with MAAX Radia Corner Door # 137448-900

SQUARE BASE 36 - CORNER - 3 IN - 101432

SKU	Color	Configuration	Dimensions & Weight	Packaging	MSRP
101432-000-001-000	White	Corner Drain / Corner Left or Right	36 1/8” x 36 1/8” x 3” / 40 lb	8.93 ft^3	$ 812

RECOMMENDED DOORS - VISIT OUR WEBSITE FOR A COMPLETE LIST OF RECOMMENDED DOORS

SKU	Product Name	Pag.
139575	Reveal Sleek 71 32 1/2-35 1/2 x 71 1/2 - 8mm	904
137448	Radia Square 36 x 36 x 71 ½ - 6mm	957
139584	Capella 78 32 ½-35 ½ x 78 - 8mm	878
136676	Reveal 71 32 ½-35 ½ x 71 ½ - 8mm	901

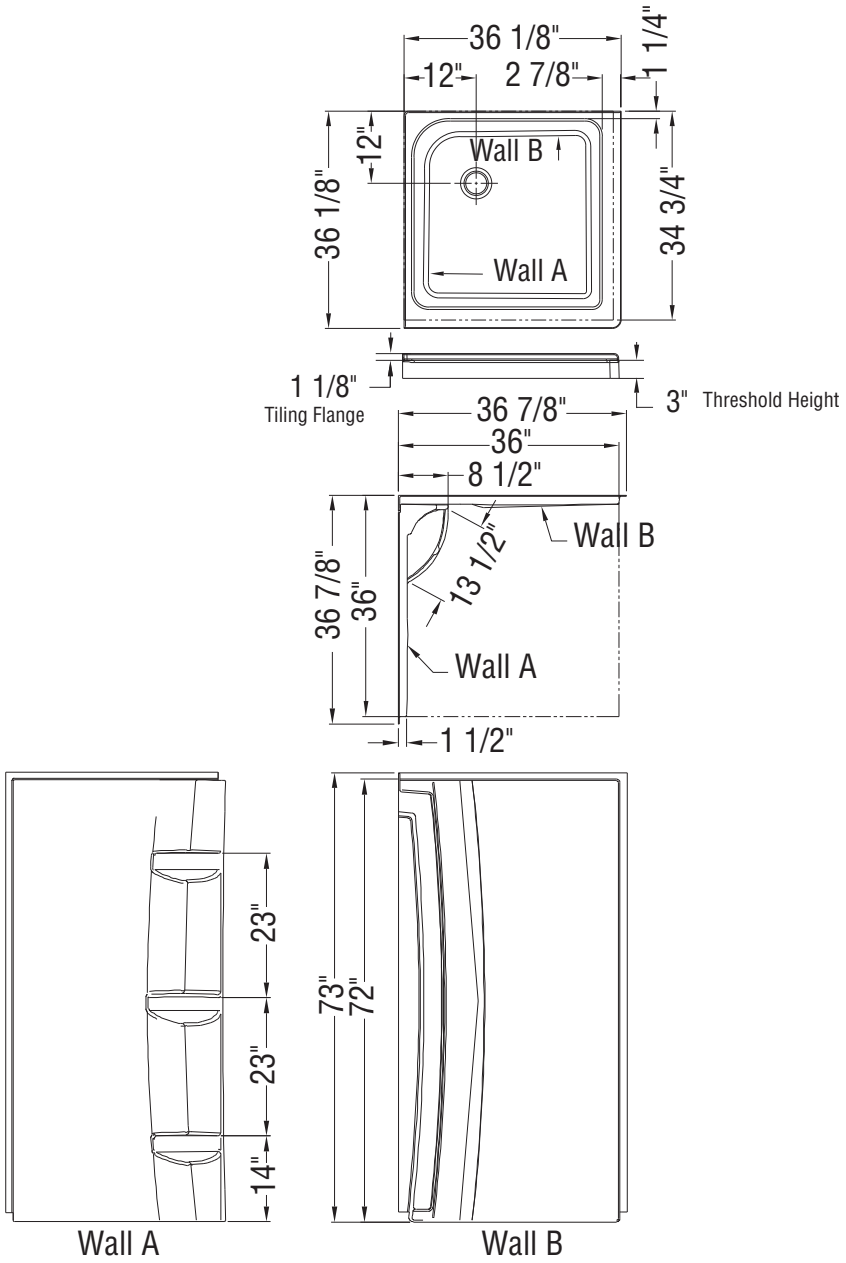

All dimensions are approximate. Structure measurements must be verified against the unit to ensure proper fit.

Rectangular Base 4234 - 3 in

Material : Acrylic

Features

- 42x34 Acrylic Alcove Shower Base with Center Drain in White, direct to stud installation
- 3 in. low threshold
- Durable high shine acrylic stays warm to the touch and is easy to clean
- Textured bottom
- Center drain - consult MAAX technical drawing (specification) for exact dimensions
- Limited warranty is for a period of 25 years, phone # 1-877-GET-MAAX

RECTANGULAR BASE 4234 - 3 IN - 102001

SKU	Color	Configuration	Dimensions & Weight	Packaging	MSRP
102001-000-001-000	White	Center Drain / Alcove	41 3/4” x 34 1/8” x 3” / 48 lb	9.6 ft^3	$ 1004

RECOMMENDED DOORS - VISIT OUR WEBSITE FOR A COMPLETE LIST OF RECOMMENDED DOORS

SKU	Product Name	Pag.
138268	Manhattan 39-41 x 68	891
138520	Incognito 74 39-42 x 74 in. 8mm Shower Door	835
139576	Reveal Sleek 71 38-41 x 71 1/2 - 8mm	904
134562	Kameleon 40-44 x 71 - 6mm	825
134662	Kameleon SC 40-44 x 71 - 6mm	816
136679	Reveal 71 38-41 x 71 ½ - 8 mm	901

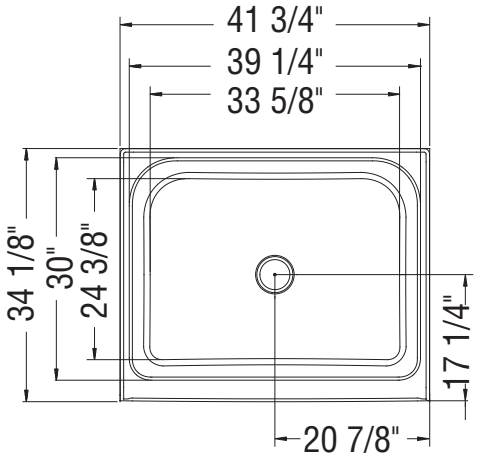

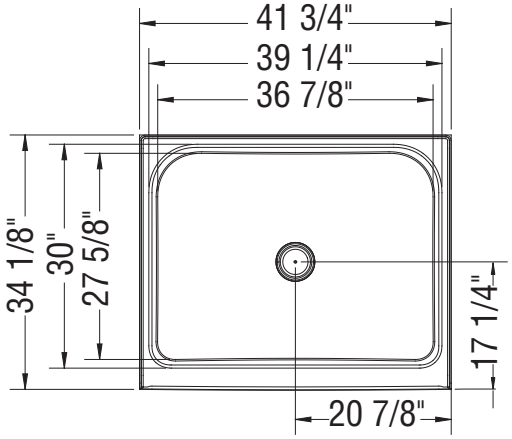

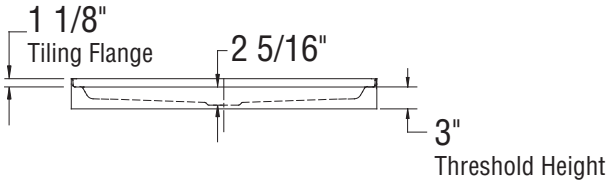

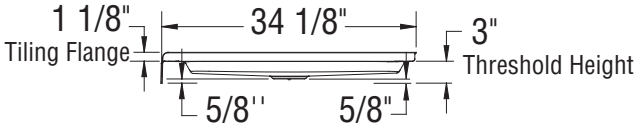

All dimensions are approximate. Structure measurements must be verified against the unit to ensure proper fit.

Rectangular Base 4236 - 3 in.

Material : Acrylic

Features

- 42x36 Acrylic Alcove Shower Base with Center Drain in White, direct to stud installation
- 3 in. low threshold
- Durable high shine acrylic stays warm to the touch and is easy to clean
- Textured bottom
- Center drain - consult MAAX technical drawing (specification) for exact dimensions
- Limited warranty is for a period of 25 years, phone # 1-877-GET-MAAX

RECTANGULAR BASE 4236 - 3 IN. - 105718

SKU	Color	Configuration	Dimensions & Weight	Packaging	MSRP
105718-000-001-000	White	Center Drain / Alcove	41 3/4” x 36 1/8” x 3” / 48 lb	9.6 ft^3	$ 1023

RECOMMENDED DOORS - VISIT OUR WEBSITE FOR A COMPLETE LIST OF RECOMMENDED DOORS

SKU	Product Name	Pag.
138268	Manhattan 39-41 x 68	891
138520	Incognito 74 39-42 x 74 in. 8mm Shower Door	835
139576	Reveal Sleek 71 38-41 x 71 1/2 - 8mm	904
134562	Kameleon 40-44 x 71 - 6mm	825
134662	Kameleon SC 40-44 x 71 - 6mm	816
136679	Reveal 71 38-41 x 71 ½ - 8 mm	901

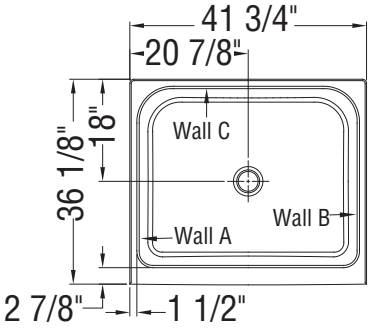

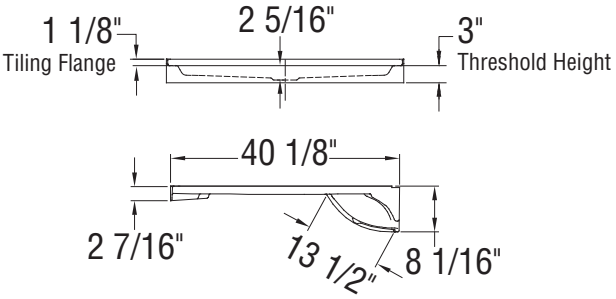

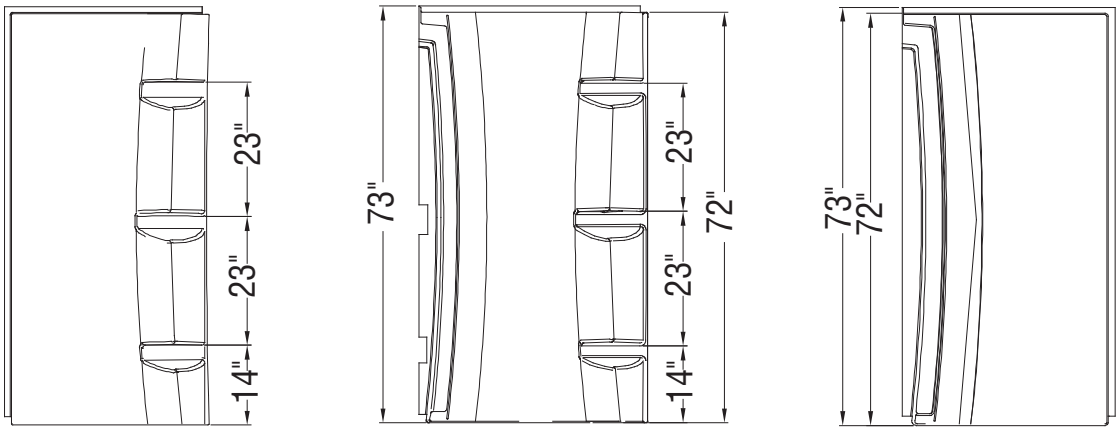

Wall A **Wall C** **Wall B**

All dimensions are approximate. Structure measurements must be verified against the unit to ensure proper fit.

Rectangular Base 4832 - 3 in

Material : Acrylic

Features

- Low threshold base
- Textured bottom
- Deflecting strip preventing water penetration behind the shower
- Alcove installation
- Easy front installation walls with snap clips are available
- Center drain

RECTANGULAR BASE 4832 - 3 IN - 101433

SKU	Color	Configuration	Dimensions & Weight	Packaging	MSRP
101433-000-001-000	White	Center Drain / Alcove	47 3/4” x 32 1/8” x 3” / 50 lb	9.6 ft^3	$ 1023

RECOMMENDED DOORS - VISIT OUR WEBSITE FOR A COMPLETE LIST OF RECOMMENDED DOORS

SKU	Product Name	Pag.
135321	Uptown 44-47 x 76 in. 8 mm	854
138950	Halo Pro 44 ½-47 x 78 ¾ - 8mm	866
135334	Incognito 76 44-47 x 76 in. 8mm Shower Door	839
139352	Incognito 70 44-47 x 70 1/2 in. 8mm Shower Door	833
139349	Incognito 70 44-47 x 70 1/2 in. 6mm Shower Door	831
138460	Vela 44 ½-47 x 78 ¾ - 8mm	858
136693	Revelation Round 44-47 x 70 ½-73 - 8mm	848
135690	Revelation Square 44-47 x 70 ½-73 - 6mm	850
134563	Kameleon 43-47 x 71 - 6mm	822
135323	Uptown 44-47 x 76 in. 8 mm	876
135325	Uptown 45-47 x 76 in. 8 mm	907
134663	Kameleon SC 43-47 x 71 - 6mm	818
139578	Reveal Sleek 71 44-47 x 71 1/2 - 8mm	904
134571	Kameleon 43-47 x 71 - 8mm	827
135870	Nebula 44 ½-46 ½ x 78 ¾ - 8mm	856
138954	Halo Pro TB 44 ½-47 x 78 ¾ - 8mm	868
135331	Incognito 76 Shaker 44-47 x 76 in. 8mm Shower Door	837
136271	Duel 44-47 x 70 1/2-74	829
137421	Odyssey SC 45-47 1/2 x 78 - 8 mm	874
136956	Duel Alto 44-47 X 78 - 8 mm	812
138761	Inverto 43-47 x 70 ½-74 - 8mm	843
139586	Capella 78 44-47 x 78 - 8mm	878
138465	Vela 44 ½-47 x 78 ¾ - 8mm	860
134674	Kameleon SC 43-47 x 71 - 8mm	820
135693	Revelation Square 44-47 x 70 ½-73 - 8mm	852
138996	Halo 44 ½-47 x 78 ¾ - 8mm	870
138992	Luminescence 44 ½-47 x 70 ½-72 - 6mm	872
136671	Reveal 71 44-47 x 71 ½ - 8mm	901
105413	Polar 42-47 ½ x 68 in.	845
138271	Manhattan 45-47 x 68	892
136690	Revelation Round 44-47 x 70 1/2-73	846

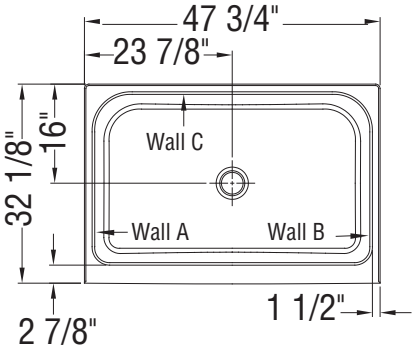

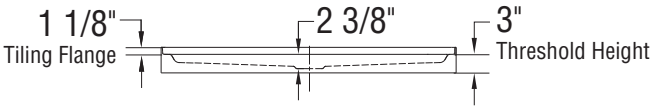

Important

Center your plumbing in the highlighted area. Exact plumbing position may vary upon model specifications, please refer to the supplier's instructions for more details

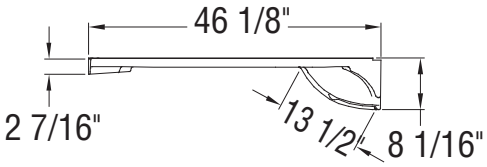

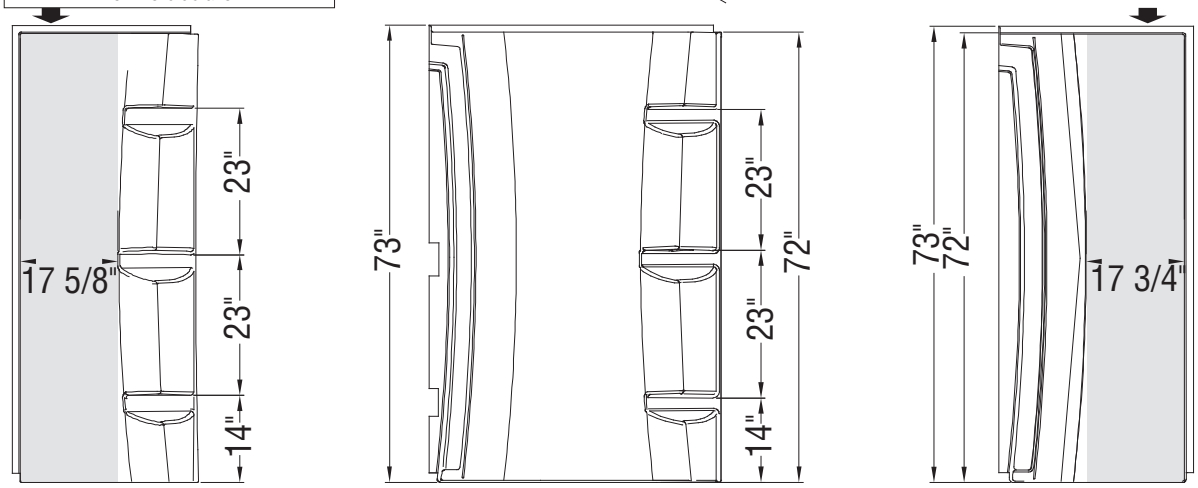

Wall A **Wall C** **Wall B**

All dimensions are approximate. Structure measurements must be verified against the unit to ensure proper fit.

Go to Table of Contents

Rectangular Base 4834 - 3 in

Material : Acrylic

Features

- 48x34 Acrylic Alcove Shower Base with Center Drain in White, direct to stud installation
- 3 in. low threshold
- Durable high shine acrylic stays warm to the touch and is easy to clean
- Textured bottom
- Center drain - consult MAAX technical drawing (specification) for exact dimensions
- Limited warranty is for a period of 25 years, phone # 1-877-GET-MAAX

RECTANGULAR BASE 4834 - 3 IN - 102002

SKU	Color	Configuration	Dimensions & Weight	Packaging	MSRP
102002-000-001-000	White	Center Drain / Alcove	47 3/4” x 34 1/8” x 3” / 52 lb	9.6 ft^3	$ 1045

RECOMMENDED DOORS - VISIT OUR WEBSITE FOR A COMPLETE LIST OF RECOMMENDED DOORS

SKU	Product Name	Pag.
135321	Uptown 44-47 x 76 in. 8 mm	854
138950	Halo Pro 44 ½-47 x 78 ¾ - 8mm	866
135334	Incognito 76 44-47 x 76 in. 8mm Shower Door	839
139352	Incognito 70 44-47 x 70 1/2 in. 8mm Shower Door	833
139349	Incognito 70 44-47 x 70 1/2 in. 6mm Shower Door	831
138460	Vela 44 ½-47 x 78 ¾ - 8mm	858
136693	Revelation Round 44-47 x 70 ½-73 - 8mm	848
135690	Revelation Square 44-47 x 70 ½-73 - 6mm	850
134563	Kameleon 43-47 x 71 - 6mm	822
135323	Uptown 44-47 x 76 in. 8 mm	876
135325	Uptown 45-47 x 76 in. 8 mm	907
134663	Kameleon SC 43-47 x 71 - 6mm	818
139578	Reveal Sleek 71 44-47 x 71 1/2 - 8mm	904
134571	Kameleon 43-47 x 71 - 8mm	827
135870	Nebula 44 ½-46 ½ x 78 ¾ - 8mm	856
138954	Halo Pro TB 44 ½-47 x 78 ¾ - 8mm	868
135331	Incognito 76 Shaker 44-47 x 76 in. 8mm Shower Door	837
136271	Duel 44-47 x 70 1/2-74	829
137421	Odyssey SC 45-47 1/2 x 78 - 8 mm	874
136956	Duel Alto 44-47 X 78 - 8 mm	812
138761	Inverto 43-47 x 70 ½-74 - 8mm	843
139586	Capella 78 44-47 x 78 - 8mm	878
138465	Vela 44 ½-47 x 78 ¾ - 8mm	860
134674	Kameleon SC 43-47 x 71 - 8mm	820
135693	Revelation Square 44-47 x 70 ½-73 - 8mm	852
138996	Halo 44 ½-47 x 78 ¾ - 8mm	870
138992	Luminescence 44 ½-47 x 70 ½-72 - 6mm	872
136671	Reveal 71 44-47 x 71 ½ - 8mm	901
105413	Polar 42-47 ½ x 68 in.	845
138271	Manhattan 45-47 x 68	892
136690	Revelation Round 44-47 x 70 1/2-73	846

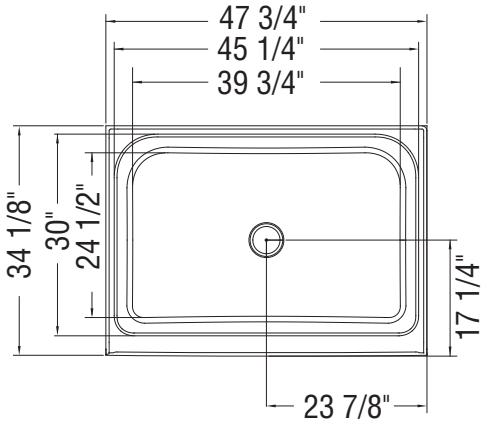

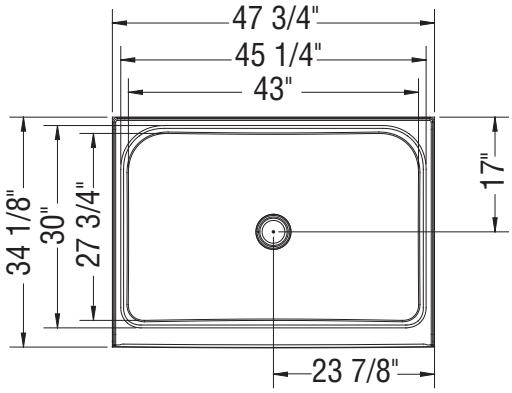

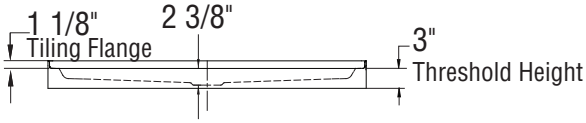

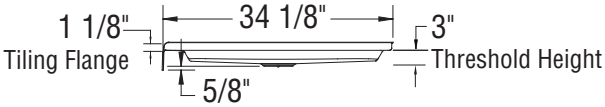

All dimensions are approximate. Structure measurements must be verified against the unit to ensure proper fit.

Rectangular Base 4836 - 3 in

Material : Acrylic

Features

- Proudly made in Canada
- 48 x36 Acrylic Alcove Shower Base with Center Drain in White, direct to stud installation
- 3 in. low threshold
- Durable high shine acrylic stays warm to the touch and is easy to clean
- Textured bottom
- Center drain - consult MAAX technical drawing (specification) for exact dimensions
- Limited warranty is for a period of 25 years, phone # 1-877-GET-MAAX

RECTANGULAR BASE 4836 - 3 IN - 105717

SKU	Color	Configuration	Dimensions & Weight	Packaging	MSRP
105717-000-001-000	White	Center Drain / Alcove	47 3/4” x 36 1/8” x 3” / 53 lb	9.6 ft^3	$ 1069

RECOMMENDED DOORS - VISIT OUR WEBSITE FOR A COMPLETE LIST OF RECOMMENDED DOORS

SKU	Product Name	Pag.
135321	Uptown 44-47 x 76 in. 8 mm	854
138950	Halo Pro 44 ½-47 x 78 ¾ - 8mm	866
135334	Incognito 76 44-47 x 76 in. 8mm Shower Door	839
139352	Incognito 70 44-47 x 70 1/2 in. 8mm Shower Door	833
139349	Incognito 70 44-47 x 70 1/2 in. 6mm Shower Door	831
138460	Vela 44 ½-47 x 78 ¾ - 8mm	858
136693	Revelation Round 44-47 x 70 ½-73 - 8mm	848
135690	Revelation Square 44-47 x 70 ½-73 - 6mm	850
134563	Kameleon 43-47 x 71 - 6mm	822
135323	Uptown 44-47 x 76 in. 8 mm	876
135325	Uptown 45-47 x 76 in. 8 mm	907
134663	Kameleon SC 43-47 x 71 - 6mm	818
139578	Reveal Sleek 71 44-47 x 71 1/2 - 8mm	904
134571	Kameleon 43-47 x 71 - 8mm	827
135870	Nebula 44 ½-46 ½ x 78 ¾ - 8mm	856
138954	Halo Pro TB 44 ½-47 x 78 ¾ - 8mm	868
135331	Incognito 76 Shaker 44-47 x 76 in. 8mm Shower Door	837
136271	Duel 44-47 x 70 1/2-74	829
137421	Odyssey SC 45-47 1/2 x 78 - 8 mm	874
136956	Duel Alto 44-47 X 78 - 8 mm	812
138761	Inverto 43-47 x 70 ½-74 - 8mm	843
139586	Capella 78 44-47 x 78 - 8mm	878
138465	Vela 44 ½-47 x 78 ¾ - 8mm	860
134674	Kameleon SC 43-47 x 71 - 8mm	820
135693	Revelation Square 44-47 x 70 ½-73 - 8mm	852
138996	Halo 44 ½-47 x 78 ¾ - 8mm	870
138992	Luminescence 44 ½-47 x 70 ½-72 - 6mm	872
136671	Reveal 71 44-47 x 71 ½ - 8mm	901
105413	Polar 42-47 ½ x 68 in.	845
138271	Manhattan 45-47 x 68	892
136690	Revelation Round 44-47 x 70 1/2-73	846

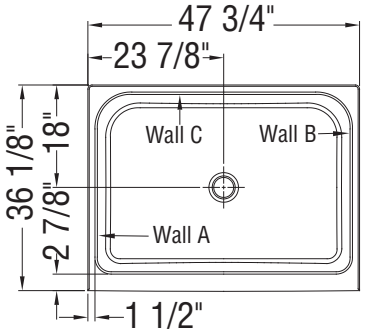

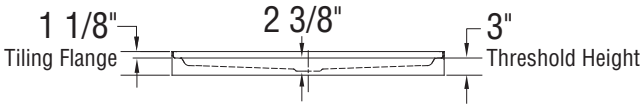

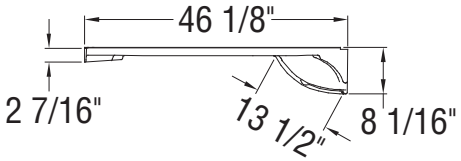

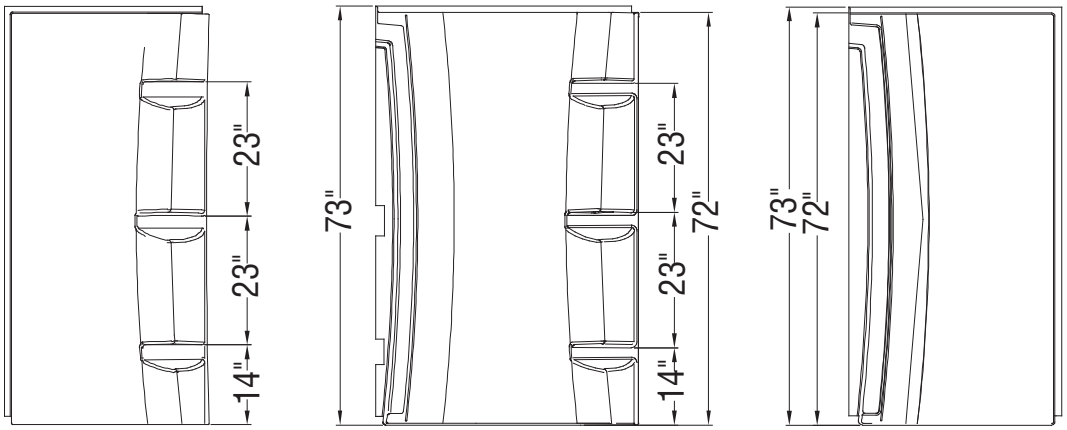

Wall A **Wall C** **Wall B**

All dimensions are approximate. Structure measurements must be verified against the unit to ensure proper fit.

Rectangular Base 6030 - 3 in

Material : Acrylic

Features

- Proudly made in Canada
- 60x30 Acrylic Alcove Shower Base with Right-Hand Drain in White, direct to stud installation
- 3 in. low threshold
- Durable high shine acrylic stays warm to the touch and is easy to clean, available in white only
- Textured bottom
- Limited warranty is for a period of 25 years, phone # 1-877-GET-MAAX

RECTANGULAR BASE 6030 - 3 IN - 105707

SKU	Color	Configuration	Dimensions & Weight	Packaging	MSRP
105707-000-001-001	White	Left Drain / Alcove	59 3/4” x 30 1/8” x 3” / 53 lb	12 ft^3	$ 1279
105707-000-001-002		Right Drain / Alcove			$ 1279

RECOMMENDED DOORS - VISIT OUR WEBSITE FOR A COMPLETE LIST OF RECOMMENDED DOORS

SKU	Product Name	Pag.
138277	Manhattan 57-59 x 68	893
138997	Halo 56 ½-59 x 78 ¾ - 8mm	870
139353	Incognito 70 56-59 x 70 1/2 in. 8mm Shower door	833
139350	Incognito 70 56-59 x 70 1/2 in. 6mm Shower door	831
135332	Incognito 76 Shaker 56-59 x 76 in. 8mm Shower Door	837
135335	Incognito 76 56-59 x 76 in. 8mm Shower Door	839
136335	Incognito 76 Smoke 56-59 x 76 - 8mm	841
135694	Revelation Square 56-59 x 70 ½-73 - 8mm	852
136691	Revelation Round 56-59 x 70 1/2-73	846
135691	Revelation Square 56-59 x 70 ½-73 - 6mm	850
136694	Revelation Round 56-59 x 70 ½-73 - 8mm	848
135322	Uptown 56-59 x 76 in. 8 mm	854
135324		876
135326	Uptown 57-59 x 76 in. 8 mm	907
135238	Connect Pro 57-58 ½ x 76 - 6mm	862
139580	Reveal Sleek 71 56-59 x 71 1/2 - 8mm	905
138956	Halo Pro TB 56 ½-59 x 78 ¾ - 8mm	868
138952	Halo Pro 56 ½-59 x 78 ¾ - 8mm	866
138541	Halo Pro GS 56 1/2-59 X 78 3/4 - 8mm	864
136955	Duel Alto 56-59 X 78 - 8 mm	812
136272	Duel 56-58 ½ x 70 ½ x 74 - 8 mm	829
138762	Inverto 56-59 x 70 ½-74 - 8mm	843
137420	Odyssey SC 57-59 1/2 x 78 - 8 mm	874
138475	Vela 56 ½-59 x 78 ¾ - 8mm	860
135875	Nebula 56 ½-58 ½ x 78 ¾ - 8mm	856
139587	Capella 78 56-59 x 78 - 8mm	878
137832	ModulR 60 x 78 - 8mm	882
134675	Kameleon SC 55-59 x 71 - 8mm	820
134572	Kameleon 55-59 x 71 - 8mm	827
134665	Kameleon SC 55-59 x 71 - 6mm	814

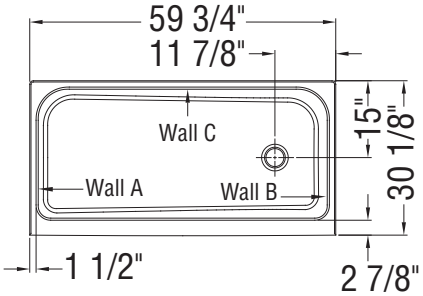

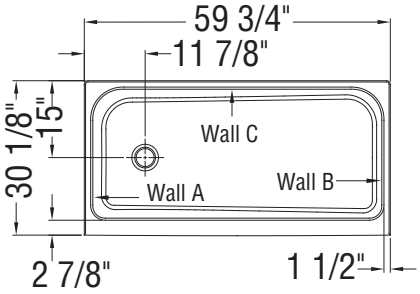

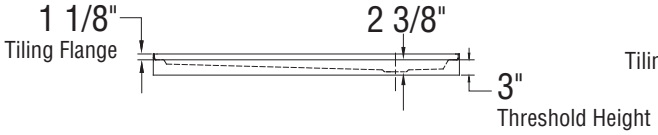

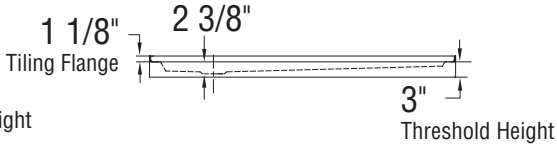

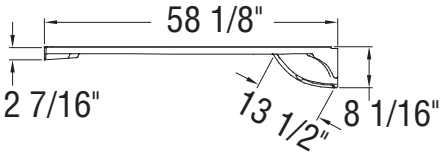

Important

Center your plumbing in the highlighted area. Exact plumbing position may vary upon model specifications, please refer to the supplier's instructions for more details

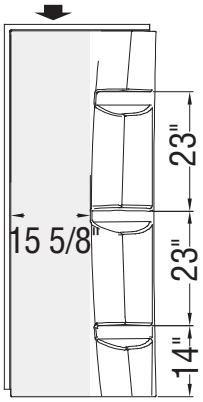

Wall A

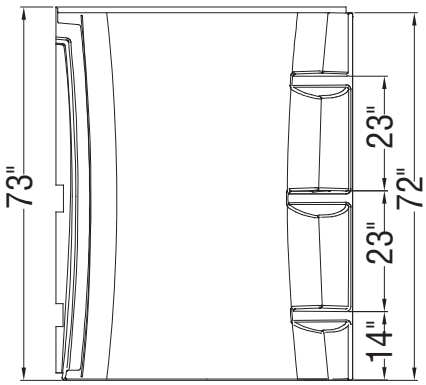

Wall C

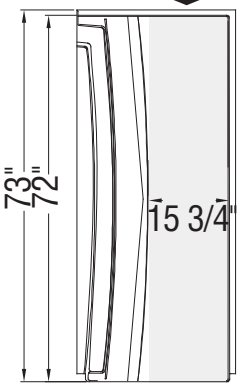

Wall B

All dimensions are approximate. Structure measurements must be verified against the unit to ensure proper fit.

Go to Table of Contents

Rectangular Base 6032 - 3 in

Material : Acrylic

Features

- 60x32 Acrylic Alcove Shower Base with Left-Hand Drain in White, direct to stud installation
- 3 in. low threshold
- Durable high shine acrylic stays warm to the touch and is easy to clean
- Textured bottom
- Limited warranty is for a period of 25 years, phone # 1-877-GET-MAAX

RECTANGULAR BASE 6032 - 3 IN - 105706

SKU	Color	Configuration	Dimensions & Weight	Packaging	MSRP
105706-000-001-001	White	Left Drain / Alcove	59 3/4” x 32 1/8” x 3” / 55 lb	12 ft^3	$ 1279
105706-000-001-002		Right Drain / Alcove			$ 1279

RECOMMENDED DOORS - VISIT OUR WEBSITE FOR A COMPLETE LIST OF RECOMMENDED DOORS

SKU	Product Name	Pag.
138277	Manhattan 57-59 x 68	893
138997	Halo 56 ½-59 x 78 ¾ - 8mm	870
139353	Incognito 70 56-59 x 70 1/2 in. 8mm Shower door	833
139350	Incognito 70 56-59 x 70 1/2 in. 6mm Shower door	831
135332	Incognito 76 Shaker 56-59 x 76 in. 8mm Shower Door	837
135335	Incognito 76 56-59 x 76 in. 8mm Shower Door	839
136335	Incognito 76 Smoke 56-59 x 76 - 8mm	841
135694	Revelation Square 56-59 x 70 ½-73 - 8mm	852
136691	Revelation Round 56-59 x 70 1/2-73	846
135691	Revelation Square 56-59 x 70 ½-73 - 6mm	850
136694	Revelation Round 56-59 x 70 ½-73 - 8mm	848
135322	Uptown 56-59 x 76 in. 8 mm	854
135324		876
135326	Uptown 57-59 x 76 in. 8 mm	907
135238	Connect Pro 57-58 ½ x 76 - 6mm	862
139580	Reveal Sleek 71 56-59 x 71 1/2 - 8mm	905
138956	Halo Pro TB 56 ½-59 x 78 ¾ - 8mm	868
138952	Halo Pro 56 ½-59 x 78 ¾ - 8mm	866
138541	Halo Pro GS 56 1/2-59 X 78 3/4 - 8mm	864
136955	Duel Alto 56-59 X 78 - 8 mm	812
136272	Duel 56-58 ½ x 70 ½ x 74 - 8 mm	829
138762	Inverto 56-59 x 70 ½-74 - 8mm	843
137420	Odyssey SC 57-59 1/2 x 78 - 8 mm	874
138475	Vela 56 ½-59 x 78 ¾ - 8mm	860
135875	Nebula 56 ½-58 ½ x 78 ¾ - 8mm	856
139587	Capella 78 56-59 x 78 - 8mm	878
137832	ModulR 60 x 78 - 8mm	882
134675	Kameleon SC 55-59 x 71 - 8mm	820
134572	Kameleon 55-59 x 71 - 8mm	827
134665	Kameleon SC 55-59 x 71 - 6mm	814

Right Drain

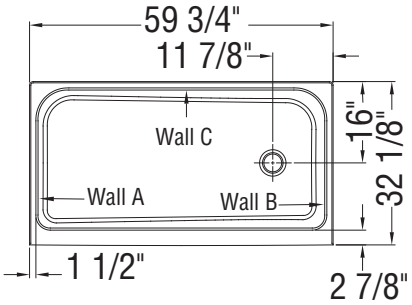

Left Drain

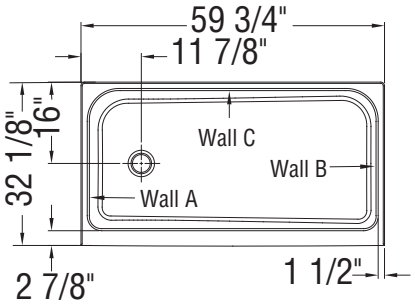

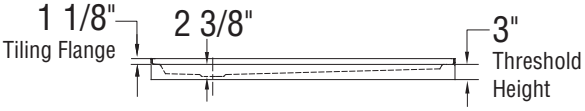

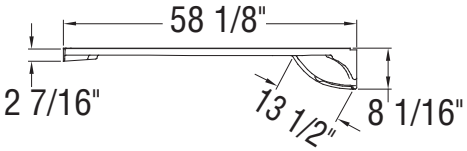

Important

Center your plumbing in the highlighted area. Exact plumbing position may vary upon model specifications, please refer to the supplier's instructions for more details

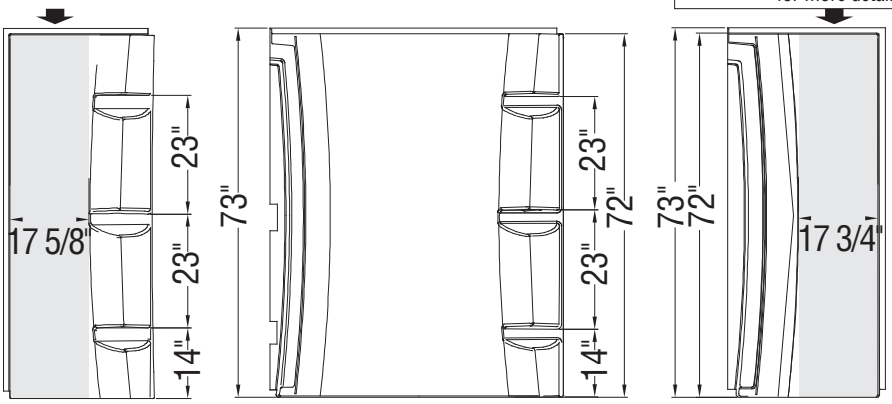

Wall A **Wall C** **Wall B**

All dimensions are approximate. Structure measurements must be verified against the unit to ensure proper fit.

Go to Table of Contents

Rectangular Base 6034 - 3 in

Material : Acrylic

Features

- 60x34 Acrylic Alcove Shower Base with Center Drain in White, direct to stud installation
- 3 in. low threshold
- Durable high shine acrylic stays warm to the touch and is easy to clean
- Textured bottom
- Center drain - consult MAAX technical drawing (specification) for exact dimensions
- Limited warranty is for a period of 25 years, phone # 1-877-GET-MAAX

RECTANGULAR BASE 6034 - 3 IN - 102003

SKU	Color	Configuration	Dimensions & Weight	Packaging	MSRP
102003-000-001-000	White	Center Drain / Alcove	59 3/4” x 34 1/8” x 3” / 58 lb	12 ft^3	$ 1193

RECOMMENDED DOORS - VISIT OUR WEBSITE FOR A COMPLETE LIST OF RECOMMENDED DOORS

SKU	Product Name	Pag.
138277	Manhattan 57-59 x 68	893
138997	Halo 56 ½-59 x 78 ¾ - 8mm	870
139353	Incognito 70 56-59 x 70 1/2 in. 8mm Shower door	833
139350	Incognito 70 56-59 x 70 1/2 in. 6mm Shower door	831
135332	Incognito 76 Shaker 56-59 x 76 in. 8mm Shower Door	837
135335	Incognito 76 56-59 x 76 in. 8mm Shower Door	839
136335	Incognito 76 Smoke 56-59 x 76 - 8mm	841
135694	Revelation Square 56-59 x 70 ½-73 - 8mm	852
136691	Revelation Round 56-59 x 70 1/2-73	846
135691	Revelation Square 56-59 x 70 ½-73 - 6mm	850
136694	Revelation Round 56-59 x 70 ½-73 - 8mm	848
135322	Uptown 56-59 x 76 in. 8 mm	854
135324		876
135326	Uptown 57-59 x 76 in. 8 mm	907
135238	Connect Pro 57-58 ½ x 76 - 6mm	862
139580	Reveal Sleek 71 56-59 x 71 1/2 - 8mm	905
138956	Halo Pro TB 56 ½-59 x 78 ¾ - 8mm	868
138952	Halo Pro 56 ½-59 x 78 ¾ - 8mm	866
138541	Halo Pro GS 56 1/2-59 X 78 3/4 - 8mm	864
136955	Duel Alto 56-59 X 78 - 8 mm	812
136272	Duel 56-58 ½ x 70 ½ x 74 - 8 mm	829
138762	Inverto 56-59 x 70 ½-74 - 8mm	843
137420	Odyssey SC 57-59 1/2 x 78 - 8 mm	874
138475	Vela 56 ½-59 x 78 ¾ - 8mm	860
135875	Nebula 56 ½-58 ½ x 78 ¾ - 8mm	856
139587	Capella 78 56-59 x 78 - 8mm	878
137832	ModulR 60 x 78 - 8mm	882
134675	Kameleon SC 55-59 x 71 - 8mm	820
134572	Kameleon 55-59 x 71 - 8mm	827
134665	Kameleon SC 55-59 x 71 - 6mm	814
134565	Kameleon 55-59 x 71 - 6mm	822

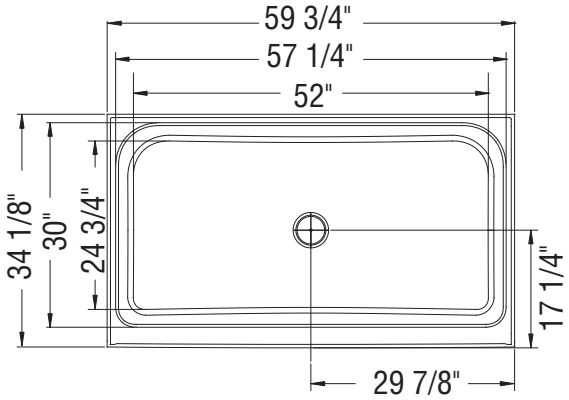

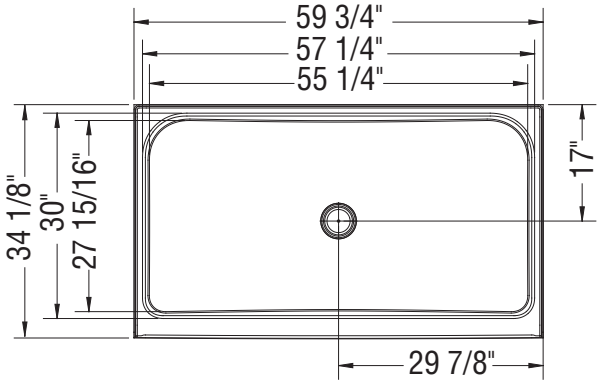

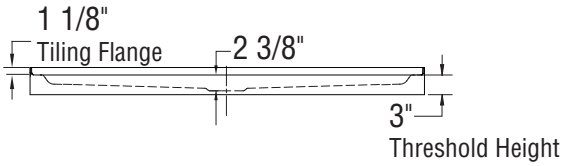

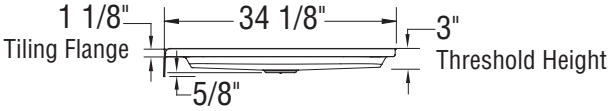

All dimensions are approximate. Structure measurements must be verified against the unit to ensure proper fit.

Rectangular Base 6036 - R/L Drain - 3 in.

Material : Acrylic

Features

- 60x36 Acrylic Alcove Shower Base with Center Drain in White, direct to stud installation
- 3 in. low threshold
- Durable high shine acrylic stays warm to the touch and is easy to clean
- Textured bottom
- Center drain - consult MAAX technical drawing (specification) for exact dimensions
- Limited warranty is for a period of 25 years, phone # 1-877-GET-MAAX

RECTANGULAR BASE 6036 - 3 IN - 105664

SKU	Color	Configuration	Dimensions & Weight	Packaging	MSRP
105664-000-001-000	White	Center Drain / Alcove	59 3/4” x 36 1/8” x 3” / 58 lb	12 ft^3	$ 1320

RECTANGULAR BASE 6036 - R/L DRAIN - 3 IN. - 105666

SKU	Color	Configuration	Dimensions & Weight	Packaging	MSRP
105666-000-001-001	White	Left Drain / Alcove	59 3/4” x 36 1/4” x 3” / 58 lb	12 ft^3	$ 1320
105666-000-001-002		Right Drain / Alcove			$ 1320

RECOMMENDED DOORS - VISIT OUR WEBSITE FOR A COMPLETE LIST OF RECOMMENDED DOORS

SKU	Product Name	Pag.
138277	Manhattan 57-59 x 68	893
138997	Halo 56 ½-59 x 78 ¾ - 8mm	870
139353	Incognito 70 56-59 x 70 1/2 in. 8mm Shower door	833
139350	Incognito 70 56-59 x 70 1/2 in. 6mm Shower door	831
135332	Incognito 76 Shaker 56-59 x 76 in. 8mm Shower Door	837
135335	Incognito 76 56-59 x 76 in. 8mm Shower Door	839
136335	Incognito 76 Smoke 56-59 x 76 - 8mm	841
135694	Revelation Square 56-59 x 70 ½-73 - 8mm	852
136691	Revelation Round 56-59 x 70 1/2-73	846
135691	Revelation Square 56-59 x 70 ½-73 - 6mm	850
136694	Revelation Round 56-59 x 70 ½-73 - 8mm	848
135322	Uptown 56-59 x 76 in. 8 mm	854
135324		876
135326	Uptown 57-59 x 76 in. 8 mm	907
135238	Connect Pro 57-58 ½ x 76 - 6mm	862
139580	Reveal Sleek 71 56-59 x 71 1/2 - 8mm	905
138956	Halo Pro TB 56 ½-59 x 78 ¾ - 8mm	868
138952	Halo Pro 56 ½-59 x 78 ¾ - 8mm	866
138541	Halo Pro GS 56 1/2-59 X 78 3/4 - 8mm	864
136955	Duel Alto 56-59 X 78 - 8 mm	812
136272	Duel 56-58 ½ x 70 ½ x 74 - 8 mm	829
138762	Inverto 56-59 x 70 ½-74 - 8mm	843
137420	Odyssey SC 57-59 1/2 x 78 - 8 mm	874
138475	Vela 56 ½-59 x 78 ¾ - 8mm	860

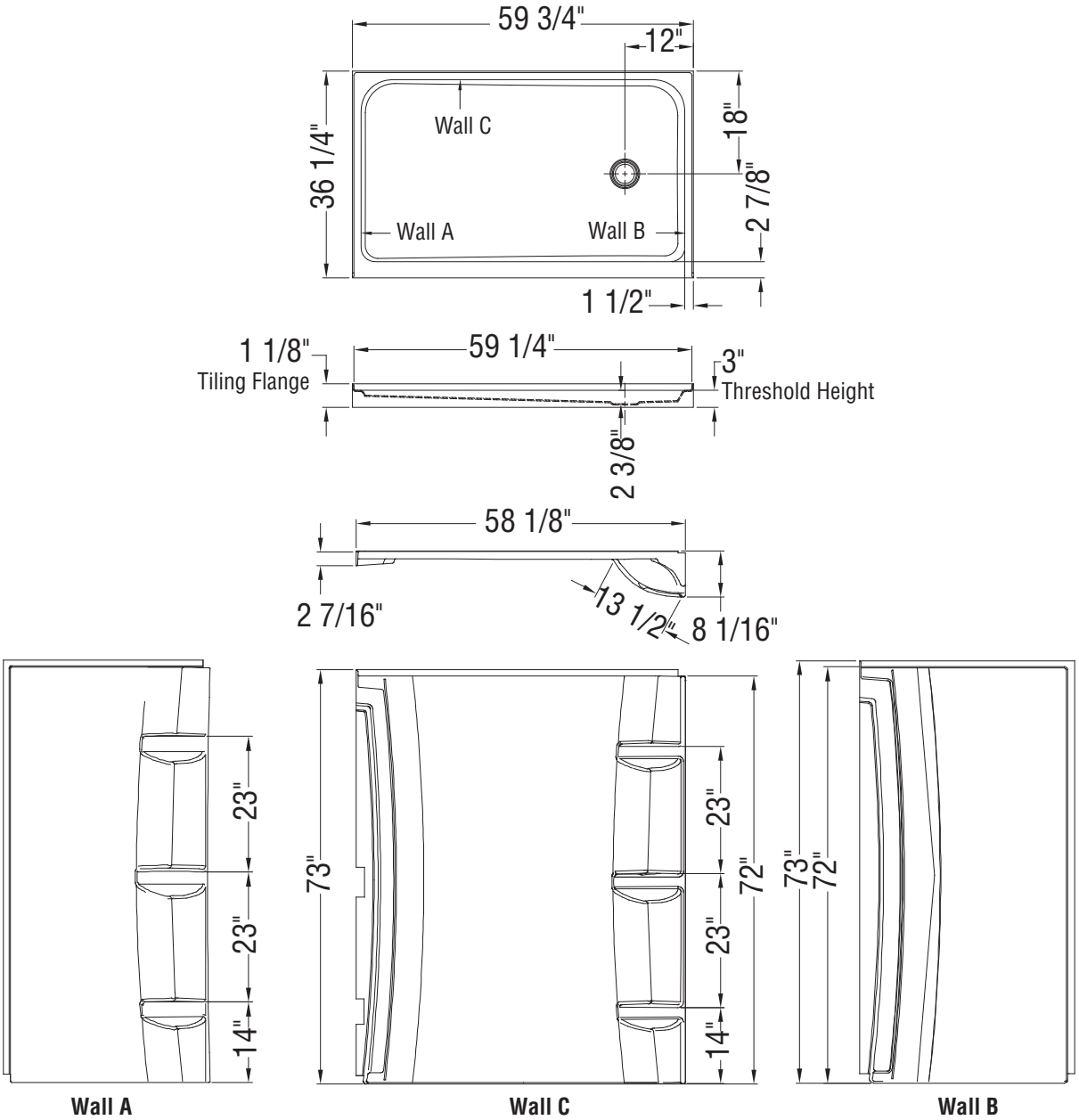

All dimensions are approximate. Structure measurements must be verified against the unit to ensure proper fit.

Rectangular Base 6042 - 3 in

Material : Acrylic

Features

- Low threshold base
- Textured bottom
- Deflecting strip preventing water penetration behind the shower
- Alcove installation
- Easy front installation walls with snap clips are available
- Centre drain

RECTANGULAR BASE 6042 - 3 IN - 105716

SKU	Color	Configuration	Dimensions & Weight	Packaging	MSRP
105716-000-001-000	White	Center Drain / Alcove	59 3/4” x 42 1/8” x 3” / 60 lb	14 ft^3	$ 1451

RECOMMENDED DOORS - VISIT OUR WEBSITE FOR A COMPLETE LIST OF RECOMMENDED DOORS

SKU	Product Name	Pag.
138277	Manhattan 57-59 x 68	893
138997	Halo 56 ½-59 x 78 ¾ - 8mm	870
139353	Incognito 70 56-59 x 70 1/2 in. 8mm Shower door	833
139350	Incognito 70 56-59 x 70 1/2 in. 6mm Shower door	831
135332	Incognito 76 Shaker 56-59 x 76 in. 8mm Shower Door	837
135335	Incognito 76 56-59 x 76 in. 8mm Shower Door	839
136335	Incognito 76 Smoke 56-59 x 76 - 8mm	841
135694	Revelation Square 56-59 x 70 ½-73 - 8mm	852
136691	Revelation Round 56-59 x 70 1/2-73	846
135691	Revelation Square 56-59 x 70 ½-73 - 6mm	850
136694	Revelation Round 56-59 x 70 ½-73 - 8mm	848
135322	Uptown 56-59 x 76 in. 8 mm	854
135324		876
135326	Uptown 57-59 x 76 in. 8 mm	907
135238	Connect Pro 57-58 ½ x 76 - 6mm	862
139580	Reveal Sleek 71 56-59 x 71 1/2 - 8mm	905
138956	Halo Pro TB 56 ½-59 x 78 ¾ - 8mm	868
138952	Halo Pro 56 ½-59 x 78 ¾ - 8mm	866
138541	Halo Pro GS 56 1/2-59 X 78 3/4 - 8mm	864
136955	Duel Alto 56-59 X 78 - 8 mm	812
136272	Duel 56-58 ½ x 70 ½ x 74 - 8 mm	829
138762	Inverto 56-59 x 70 ½-74 - 8mm	843
137420	Odyssey SC 57-59 1/2 x 78 - 8 mm	874
138475	Vela 56 ½-59 x 78 ¾ - 8mm	860
135875	Nebula 56 ½-58 ½ x 78 ¾ - 8mm	856
139587	Capella 78 56-59 x 78 - 8mm	878
137832	ModulR 60 x 78 - 8mm	882
134675	Kameleon SC 55-59 x 71 - 8mm	820
134572	Kameleon 55-59 x 71 - 8mm	827
134665	Kameleon SC 55-59 x 71 - 6mm	814
134565	Kameleon 55-59 x 71 - 6mm	822

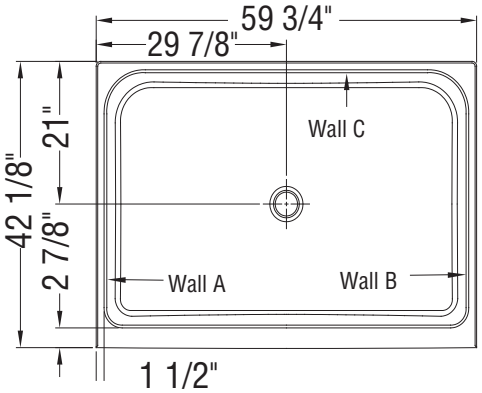

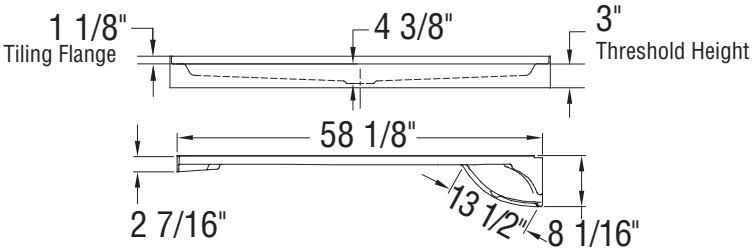

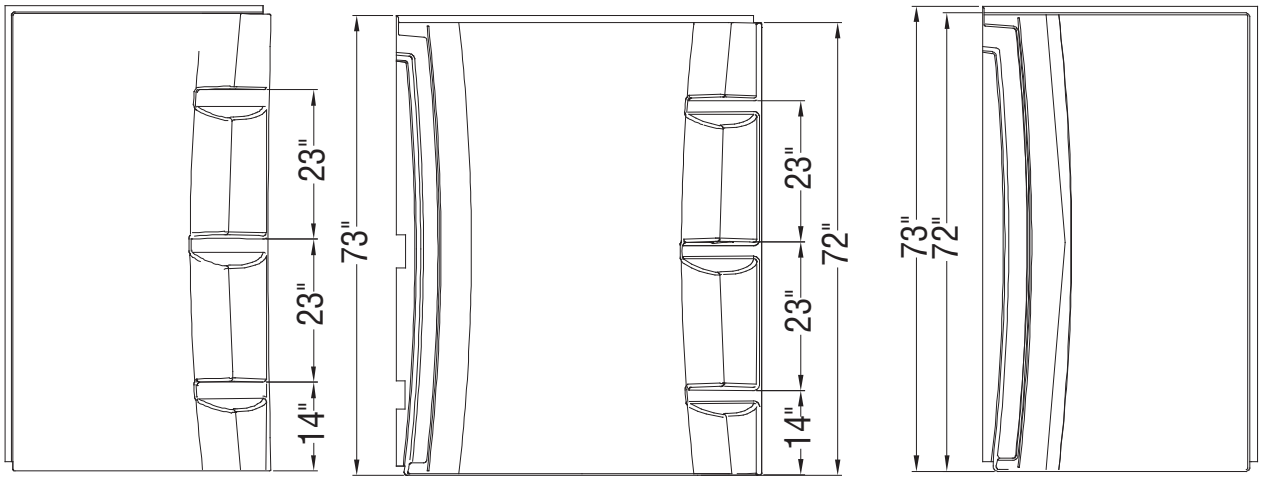

Wall A **Wall C** **Wall B**

All dimensions are approximate. Structure measurements must be verified against the unit to ensure proper fit.

Square Base 32 - Alcove - 3 in

Material : Acrylic

Features

- Proudly made in Canada
- 32x32 Acrylic Alcove Shower Base with Off-Center Drain in White
- 3 in. low threshold
- Durable high shine acrylic stays warm to the touch and is easy to clean
- Textured bottom
- Off-center drain - consult MAAX technical drawing (specification) for exact dimensions
- Limited warranty is for a period of 25 years, phone # 1-877-GET-MAAX

SQUARE BASE 32 - ALCOVE - 3 IN - 105663

SKU	Color	Configuration	Dimensions & Weight	Packaging	MSRP
105663-000-001-000	White	Back End Drain / Alcove	31 3/4” x 32 1/8” x 3” / 30 lb	6 ft^3	$ 745

RECOMMENDED DOORS - VISIT OUR WEBSITE FOR A COMPLETE LIST OF RECOMMENDED DOORS

SKU	Product Name	Pag.
138263	Manhattan 29-31 x 68 - 6mm	888
105416	Madono 28 ½-30 ½ x 67 - 6mm	886
136732	Polar Pivot 29-30 ¾ x 64 ½ in.	899
136645	Pivolok 29-30 ¾ x 64 ½ in.	896

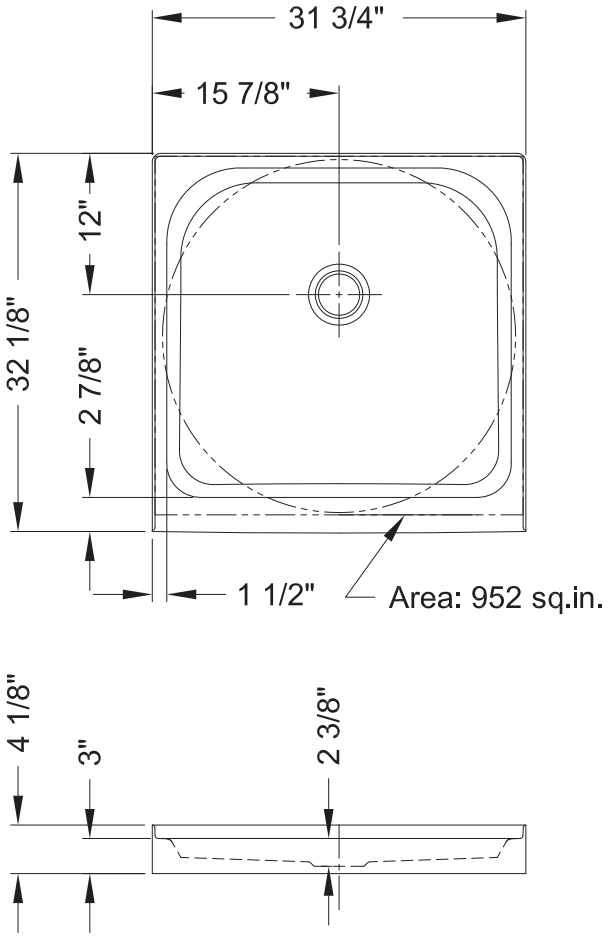

All dimensions are approximate and subject to change without prior notice.
Please refer to installation guide before installing unit.

Square Base 36 - Alcove - 3 in

Material : Acrylic

Features

- Proudly made in Canada
- 36x36 Acrylic Alcove Shower Base with Off-Center Drain in White, direct to stud installation
- 3 in. low threshold
- Durable high shine acrylic stays warm to the touch and is easy to clean, available in white only
- Textured bottom
- Off-center drain - consult MAAX technical drawing (specification) for exact dimensions
- Limited warranty is for a period of 25 years, phone # 1-877-GET-MAAX

SQUARE BASE 36 - ALCOVE - 3 IN - 101430

SKU	Color	Configuration	Dimensions & Weight	Packaging	MSRP
101430-000-001-000	White	Back End Drain / Alcove	36 1/8” x 36 1/8” x 3” / 40 lb	8.93 ft^3	$ 812

RECOMMENDED DOORS - VISIT OUR WEBSITE FOR A COMPLETE LIST OF RECOMMENDED DOORS

SKU	Product Name	Pag.
138265	Manhattan 33-35 x 68 - 6mm	889
139575	Reveal Sleek 71 32 1/2-35 1/2 x 71 1/2 - 8mm	904
139584	Capella 78 32 ½-35 ½ x 78 - 8mm	878
137835	ModulR 36 x 78 - 8mm	882
105418	Madono 34 ½-36 ½ x 67 - 6mm	886
136676	Reveal 71 32 ½-35 ½ x 71 ½ - 8mm	901
136733	Polar Pivot 33-34 ¾ x 64 ½ in.	899
136435	Pivolok Deluxe 32 ½-37 x 64 ½ in.	895
136656	Pivolok 33-34 ¾ x 64 ½ in.	896

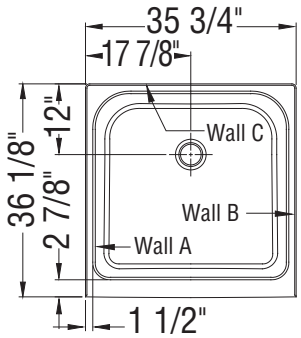

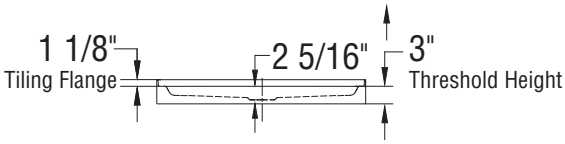

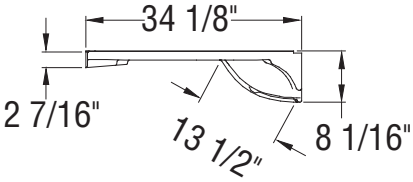

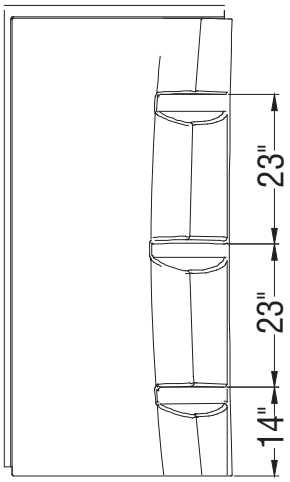

Wall A

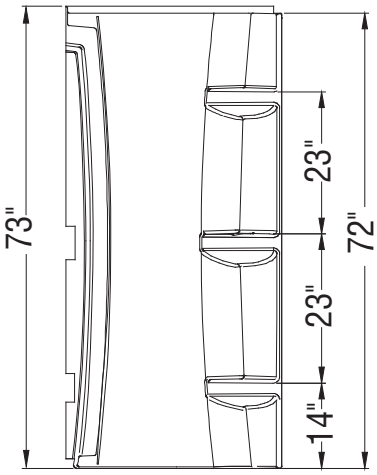

Wall C

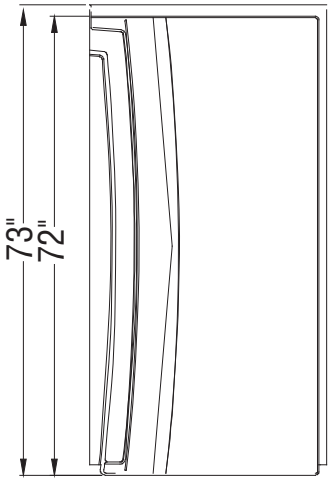

Wall B

All dimensions are approximate. Structure measurements must be verified against the unit to ensure proper fit.

Square Base 42 - Alcove - 3 in

Material : Acrylic

Features

- 42x42 Acrylic Alcove Shower Base with Center Drain in White, direct to stud installation
- 3 in. low threshold
- Durable high shine acrylic stays warm to the touch and is easy to clean
- Textured bottom
- Center drain - consult MAAX technical drawing (specification) for exact dimensions
- Limited warranty is for a period of 25 years, phone # 1-877-GET-MAAX

SQUARE BASE 42 - ALCOVE - 3 IN - 105714

SKU	Color	Configuration	Dimensions & Weight	Packaging	MSRP
105714-000-001-000	White	Center Drain / Alcove	41 3/4” x 42 1/8” x 3” / 42 lb	9.9 ft^3	$ 1023

RECOMMENDED DOORS - VISIT OUR WEBSITE FOR A COMPLETE LIST OF RECOMMENDED DOORS

SKU	Product Name	Pag.
138268	Manhattan 39-41 x 68	891
138520	Incognito 74 39-42 x 74 in. 8mm Shower Door	835
139576	Reveal Sleek 71 38-41 x 71 1/2 - 8mm	904
134562	Kameleon 40-44 x 71 - 6mm	825
134662	Kameleon SC 40-44 x 71 - 6mm	816
136679	Reveal 71 38-41 x 71 ½ - 8 mm	901

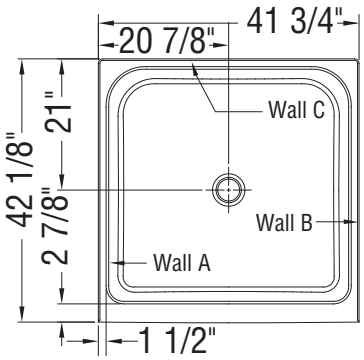

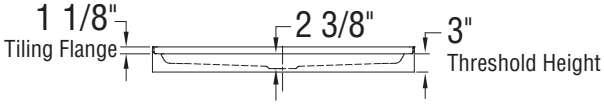

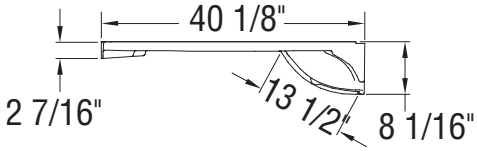

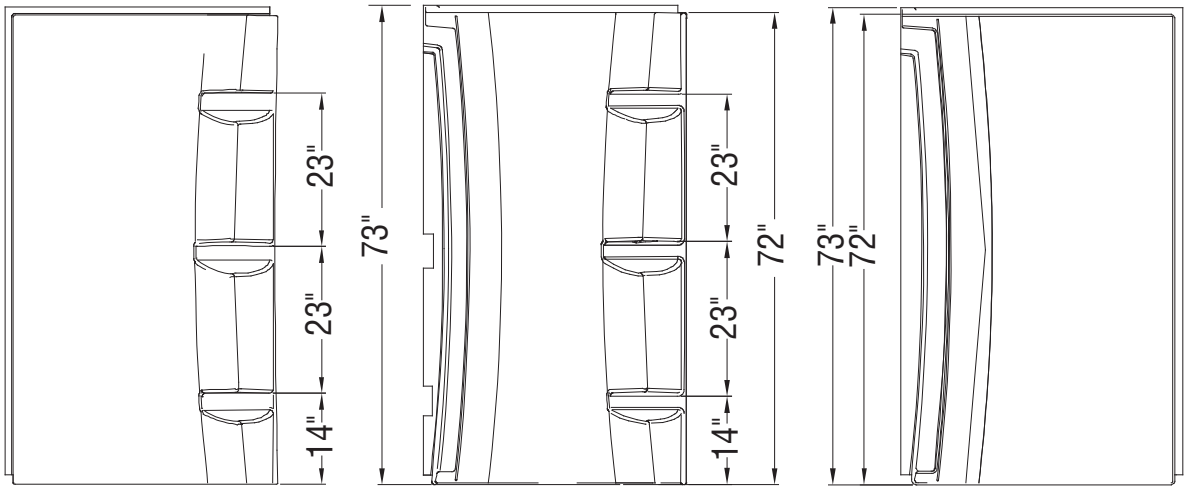

Wall A **Wall C** **Wall B**

All dimensions are approximate. Structure measurements must be verified against the unit to ensure proper fit.

SPL 3232

Material : AcrylX

Features

- Base available with 3 3/8” or 7” (AFR) threshold
- Integrated tiling flange
- Textured floor
- Center drain
- Available with Above-the-Floor Rough (AFR)

SPL 3232 - 145020

SKU	Color	Configuration	Dimensions & Weight	Packaging	MSRP
145020-000-002-083	White	Center Drain / Alcove	31 7/8” x 32” x 3 3/8” / 32 lb	6.9 ft^3	$ 692

SPL 3232 AFR - 145021

SKU	Color	Configuration	Dimensions & Weight	Packaging	MSRP
145021-000-002-583	White	Center Drain / Alcove	31 7/8” x 32” x 6 7/8” / 32 lb	6.9 ft^3	$ 692

RECOMMENDED DOORS - VISIT OUR WEBSITE FOR A COMPLETE LIST OF RECOMMENDED DOORS

SKU	Product Name	Pag.
138263	Manhattan 29-31 x 68 - 6mm	888
105416	Madono 28 ½-30 ½ x 67 - 6mm	886
136732	Polar Pivot 29-30 ¾ x 64 ½ in.	899
136645	Pivolok 29-30 ¾ x 64 ½ in.	896

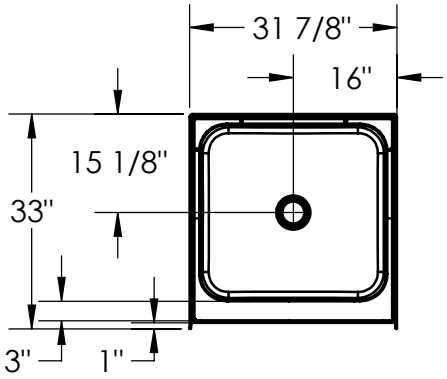

NOT ABOVE THE FLOOR

All dimensions are approximate. Structure measurements must be verified against the unit to ensure proper fit.

SPL 3636

Material : AcrylX

Features

- Base available with 3 3/8” or 7” (AFR) threshold
- Integrated tiling flange
- Textured floor
- Center drain
- Available with Above-the-Floor Rough (AFR)

SPL 3636 - 145026

SKU	Color	Configuration	Dimensions & Weight	Packaging	MSRP
145026-000-002-083	White	Center Drain / Alcove	35 7/8” x 36” x 3 3/8” / 35 lb	7.4 ft^3	$ 774

SPL 3636 AFR - 145027

SKU	Color	Configuration	Dimensions & Weight	Packaging	MSRP
145027-000-002-583	White	Center Drain / Alcove	35 7/8” x 36” x 6 7/8” / 35 lb	7.4 ft^3	$ 774

RECOMMENDED DOORS - VISIT OUR WEBSITE FOR A COMPLETE LIST OF RECOMMENDED DOORS

SKU	Product Name	Pag.
138265	Manhattan 33-35 x 68 - 6mm	889
139575	Reveal Sleek 71 32 1/2-35 1/2 x 71 1/2 - 8mm	904
139584	Capella 78 32 ½-35 ½ x 78 - 8mm	878
137835	ModulR 36 x 78 - 8mm	882
136676	Reveal 71 32 ½-35 ½ x 71 ½ - 8mm	901
136733	Polar Pivot 33-34 ¾ x 64 ½ in.	899
136435	Pivolok Deluxe 32 ½-37 x 64 ½ in.	895
136656	Pivolok 33-34 ¾ x 64 ½ in.	896

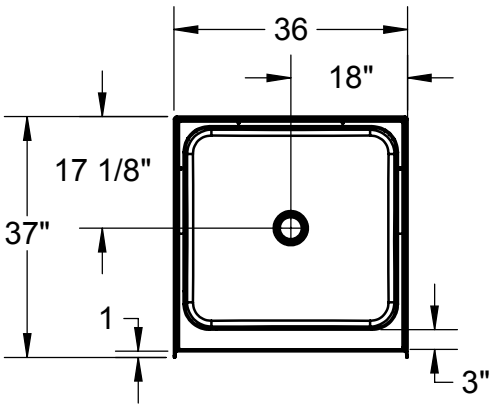

Not above the Floor

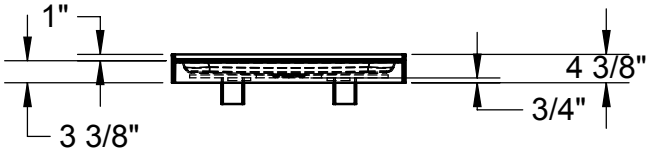

All dimensions are approximate. Structure measurements must be verified against the unit to ensure proper fit.

Go to Table of Contents

SPS 3060

Material : AcrylX

Features

- Base available in 6 in. (AFR) or 4 in. low height
- Rectangular shower base
- Integrated tiling flange
- Right or left integrated seat
- Textured floor
- Right, left or center drain
- To install a shower door on this base in the case where tile is installed, MAAX tile adaptor is required (model 10024636-002) - sold separately

SPS 3060 - 145038

SKU	Color	Configuration	Dimensions & Weight	Packaging	MSRP
145038-000-002-083	White	Center Drain / No Seat Seat / Alcove	59 7/8” x 30” x 4” / 52 lb	28 ft³	$ 1166
145038-000-002-084		Right Drain / Left Seat / Alcove			$ 1166
145038-000-002-085		Left Drain / Right Seat / Alcove			$ 1166

SPS 3060 AFR - 145039

SKU	Color	Configuration	Dimensions & Weight	Packaging	MSRP
145039-000-002-583	White	Center Drain / No Seat Seat / Alcove	59 7/8” x 30” x 6” / 52 lb	28 ft³	$ 1166
145039-000-002-584		Right Drain / Left Seat / Alcove			$ 1166
145039-000-002-585		Left Drain / Right Seat / Alcove			$ 1166

ACCESSORIES

SKU	Description	MSRP
10024636-002	Tile Adaptor (for door installation) Available colors: White **(002)**, Bone **(004)** and Biscuit **(007)**	$ 260
10024636-004		$ 260
10024636-007		$ 260

RECOMMENDED DOORS - VISIT OUR WEBSITE FOR A COMPLETE LIST OF RECOMMENDED DOORS

SKU	Product Name	Pag.
138277	Manhattan 57-59 x 68	893
138997	Halo 56 ½-59 x 78 ¾ - 8mm	870
139353	Incognito 70 56-59 x 70 1/2 in. 8mm Shower door	833
139350	Incognito 70 56-59 x 70 1/2 in. 6mm Shower door	831
135332	Incognito 76 Shaker 56-59 x 76 in. 8mm Shower Door	837
135335	Incognito 76 56-59 x 76 in. 8mm Shower Door	839
136335	Incognito 76 Smoke 56-59 x 76 - 8mm	841
135694	Revelation Square 56-59 x 70 ½-73 - 8mm	852
136691	Revelation Round 56-59 x 70 1/2-73	846
135691	Revelation Square 56-59 x 70 ½-73 - 6mm	850
136694	Revelation Round 56-59 x 70 ½-73 - 8mm	848
135322	Uptown 56-59 x 76 in. 8 mm	854
135324		876
135326	Uptown 57-59 x 76 in. 8 mm	907
135238	Connect Pro 57-58 ½ x 76 - 6mm	862
139580	Reveal Sleek 71 56-59 x 71 1/2 - 8mm	905
138956	Halo Pro TB 56 ½-59 x 78 ¾ - 8mm	868
138952	Halo Pro 56 ½-59 x 78 ¾ - 8mm	866

RIGHT SEAT SHOWN
LEFT SEAT SYMMETRICAL

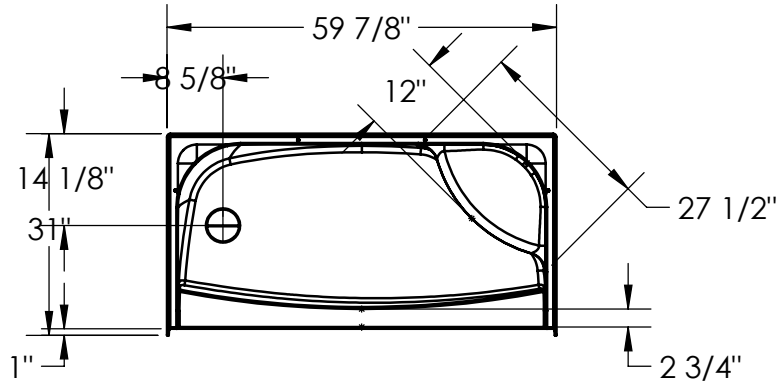

NOT ABOVE THE FLOOR

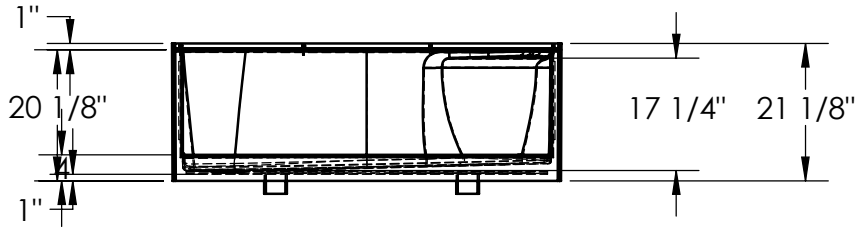

All dimensions are approximate. Structure measurements must be verified against the unit to ensure proper fit.

SPS 3448

Material : AcrylX

Features

- Base available in 6 in. (AFR) or 4 in. low height
- Integrated tiling flange
- Right or left integrated seat
- Textured floor
- Center drain
- To install a shower door on this base in the case where tile is installed, MAAX tile adaptor is required (model 10024636-002) - sold separately

SPS 3448 - 145032

SKU	Color	Configuration	Dimensions & Weight	Packaging	MSRP
145032-000-002-083	White	Center Drain / No Seat Seat / Alcove	47 7/8” x 33 5/8” x 4” / 45 lb	24.6 ft^3	$ 1008
145032-000-002-084		Center Drain / Left Seat / Alcove			$ 1008
145032-000-002-085		Center Drain / Right Seat / Alcove			$ 1008

SPS 3448 AFR - 145033

SKU	Color	Configuration	Dimensions & Weight	Packaging	MSRP
145033-000-002-583	White	Center Drain / No Seat Seat / Alcove	47 7/8” x 33 5/8” x 6” / 45 lb	24.6 ft^3	$ 1008
145033-000-002-584		Center Drain / Left Seat / Alcove			$ 1008
145033-000-002-585		Center Drain / Right Seat / Alcove			$ 1008

ACCESSORIES

SKU	Description	MSRP
10024636-002	Tile Adaptor (for door installation) Available colors: White **(002)**, Bone **(004)** and Biscuit **(007)**	$ 260
10024636-004		$ 260
10024636-007		$ 260

RECOMMENDED DOORS - VISIT OUR WEBSITE FOR A COMPLETE LIST OF RECOMMENDED DOORS

SKU	Product Name	Pag.
138271	Manhattan 45-47 x 68	892
138996	Halo 44 ½-47 x 78 ¾ - 8mm	870
135331	Incognito 76 Shaker 44-47 x 76 in. 8mm Shower Door	837
135334	Incognito 76 44-47 x 76 in. 8mm Shower Door	839
139352	Incognito 70 44-47 x 70 1/2 in. 8mm Shower Door	833
139349	Incognito 70 44-47 x 70 1/2 in. 6mm Shower Door	831
136690	Revelation Round 44-47 x 70 1/2-73	846
135693	Revelation Square 44-47 x 70 ½-73 - 8mm	852
136693	Revelation Round 44-47 x 70 ½-73 - 8mm	848
135690	Revelation Square 44-47 x 70 ½-73 - 6mm	850
135321	Uptown 44-47 x 76 in. 8 mm	854
135323		876
135325	Uptown 45-47 x 76 in. 8 mm	907
135236	Connect Pro 45-46 ½ x 76 - 6mm	862
139578	Reveal Sleek 71 44-47 x 71 1/2 - 8mm	904
138540	Halo Pro GS 44 1/2-47 X 78 3/4 - 8mm	864
138950	Halo Pro 44 ½-47 x 78 ¾ - 8mm	866
138954	Halo Pro TB 44 ½-47 x 78 ¾ - 8mm	868

RIGHT SEAT SHOWN
LEFT SEAT SYMMETRICAL

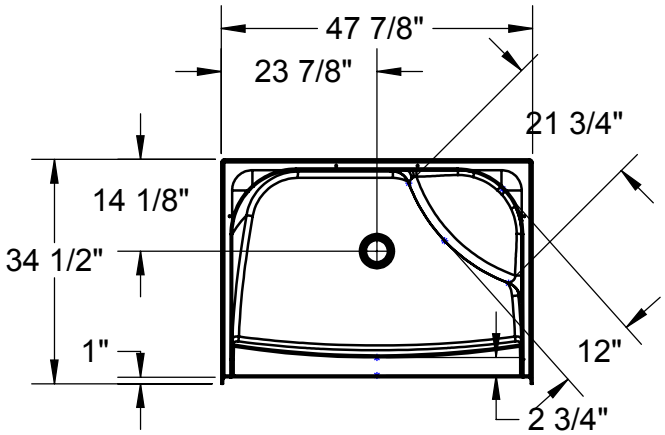

NOT ABOVE -THE-FLOOR

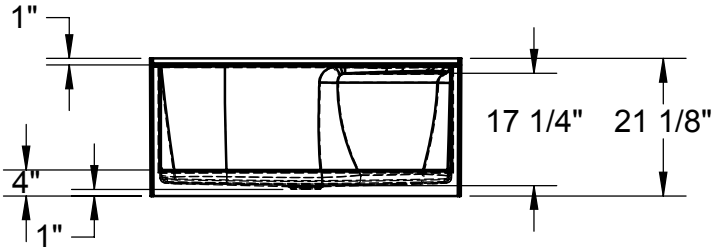

All dimensions are approximate. Structure measurements must be verified against the unit to ensure proper fit.

Go to Table of Contents

SPS 3460

Material : AcrylX

Features

- Rectangular shower base
- Integrated tiling flange
- Right or left integrated seat
- Textured floor
- Right, left or center drain
- To install a shower door on this base in the case where tile is installed, MAAX tile adaptor is required (model 10024636-002) - sold separately

SPS 3460 - 145044

SKU	Color	Configuration	Dimensions & Weight	Packaging	MSRP
145044-000-002-083	White	Center Drain / No Seat Seat / Alcove	59 7/8” x 33 1/2” x 4” / 55 lb	28 ft³	$ 1221
145044-000-002-084		Right Drain / Left Seat / Alcove			$ 1221
145044-000-002-085		Left Drain / Right Seat / Alcove			$ 1221

SPS 3460 AFR - 145045

SKU	Color	Configuration	Dimensions & Weight	Packaging	MSRP
145045-000-002-583	White	Center Drain / No Seat Seat / Alcove	59 7/8” x 33 1/2” x 6” / 55 lb	28 ft³	$ 1221
145045-000-002-584		Right Drain / Left Seat / Alcove			$ 1221
145045-000-002-585		Left Drain / Right Seat / Alcove			$ 1221

ACCESSORIES

SKU	Description	MSRP
10024636-002	Tile Adaptor (for door installation) Available colors: White **(002)**, Bone **(004)** and Biscuit **(007)**	$ 260
10024636-004		$ 260
10024636-007		$ 260

RECOMMENDED DOORS - VISIT OUR WEBSITE FOR A COMPLETE LIST OF RECOMMENDED DOORS

SKU	Product Name	Pag.
138277	Manhattan 57-59 x 68	893
138997	Halo 56 ½-59 x 78 ¾ - 8mm	870
139353	Incognito 70 56-59 x 70 1/2 in. 8mm Shower door	833
139350	Incognito 70 56-59 x 70 1/2 in. 6mm Shower door	831
135332	Incognito 76 Shaker 56-59 x 76 in. 8mm Shower Door	837
135335	Incognito 76 56-59 x 76 in. 8mm Shower Door	839
136335	Incognito 76 Smoke 56-59 x 76 - 8mm	841
135694	Revelation Square 56-59 x 70 ½-73 - 8mm	852
136691	Revelation Round 56-59 x 70 1/2-73	846
135691	Revelation Square 56-59 x 70 ½-73 - 6mm	850
136694	Revelation Round 56-59 x 70 ½-73 - 8mm	848
135322	Uptown 56-59 x 76 in. 8 mm	854
135324		876
135326	Uptown 57-59 x 76 in. 8 mm	907
135238	Connect Pro 57-58 ½ x 76 - 6mm	862
139580	Reveal Sleek 71 56-59 x 71 1/2 - 8mm	905
138956	Halo Pro TB 56 ½-59 x 78 ¾ - 8mm	868
138952	Halo Pro 56 ½-59 x 78 ¾ - 8mm	866

RIGHT SEAT SHOWN
LEFT SEAT SYMMETRICAL

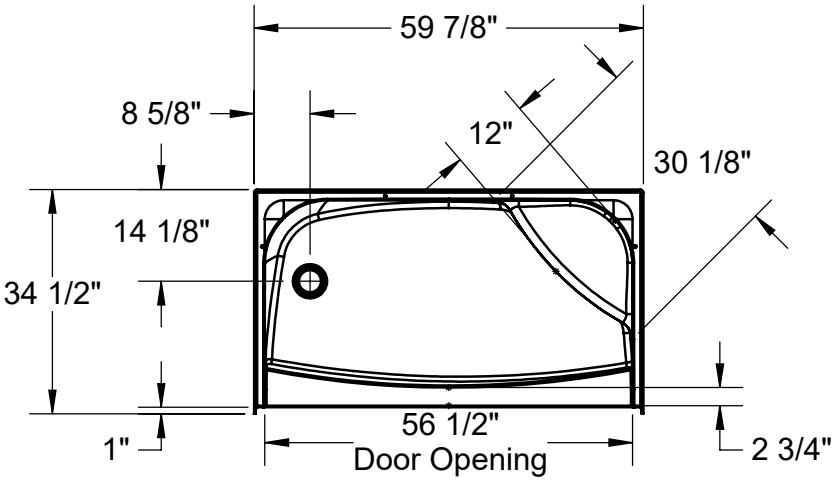

NOT ABOVE THE FLOOR

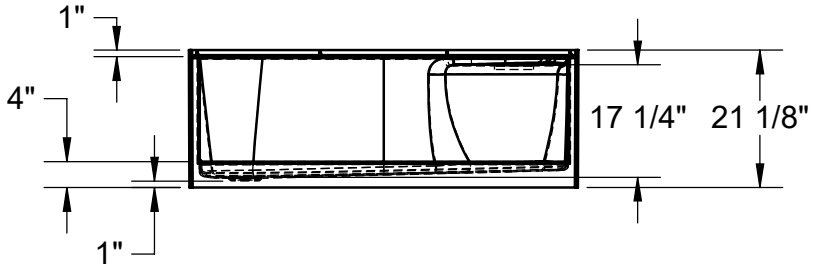

ABOVE THE FLOOR

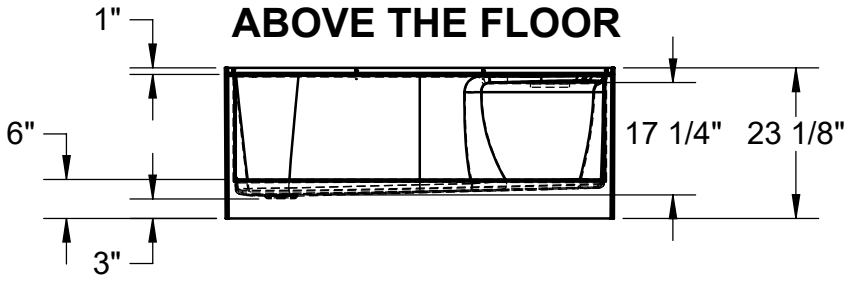

All dimensions are approximate. Structure measurements must be verified against the unit to ensure proper fit.

Stonea 4832 Shower Base

Material : Solid Surface

Features

- This universal base can be installed in an alcove and a left or right corner. Add-on flanges are included, but not pre-installed for ultimate installation flexibility
- The solid surface lightweight material is robust, long-lasting, and impact resistant, perfect for a shower base
- Versatile base designed to be installed either floor-mounted with a low threshold or recessed in the floor for an even lower threshold to accommodate your needs
- The integrated stone texture provides an anti-slip design for added safety
- Designed with a color match hidden drain plate for a sleek and seamless look
- Durable one-piece base construction with molded reinforcement for rock-solid strength and lasting performance
- Fits any standard drain (drain not included)
- Reversible drain design offers easy left- or right-hand installation to fit any bathroom layout
- The surface has the appearance of stone, but does not flake or chip like stone and is easy to clean

STONEA 4832 SHOWER BASE - 107912

SKU	Color	Configuration	Dimensions & Weight	Packaging	MSRP
107912-000-270-000	White	End Drain / No Seat Seat / Alcove or Corner	47 1/4” x 31 1/2” x 1” / 34 lb	23 ft^3	$ 714
107912-000-325-000	White Marble				$ 811
107912-000-326-000	Grey				$ 763

BASE MODEL/ MODELE DE BASE

Alcove Installation / Installation en alcôve

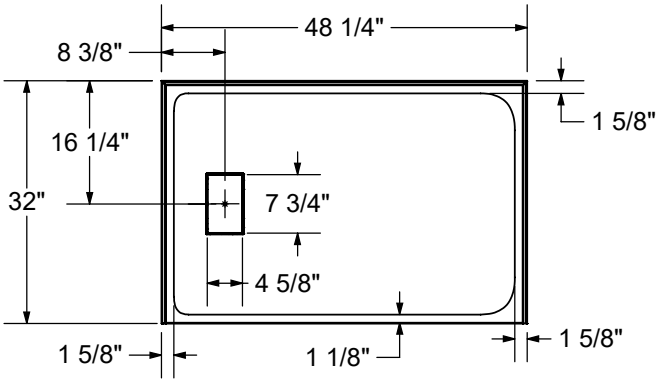

Corner Installation / Installation en coin

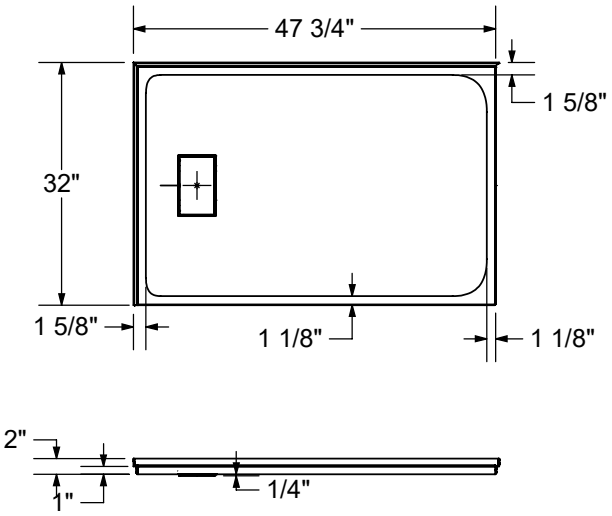

- All dimensions are approximate/Les dimensions sont approximatives
- Structure measurements must be verified against the unit to ensure proper fit/Dimensions de l'unité doivent être vérifié avant l'installation
- Installation to be completed in accordance with manufacturers specifications/Installation doit être faite selon les instructions du manufacturier
- Do not scale drawings/Ne pas mettre à l'échelle les dessins

Stonea 4836 Shower Base

Material : Solid Surface

Features

- This universal base can be installed in an alcove and a left or right corner. Add-on flanges are included, but not pre-installed for ultimate installation flexibility
- The solid surface lightweight material is robust, long-lasting, and impact resistant, perfect for a shower base
- Versatile base designed to be installed either floor-mounted with a low threshold or recessed in the floor for an even lower threshold to accommodate your needs
- The integrated stone texture provides an anti-slip design for added safety
- Designed with a color match hidden drain plate for a sleek and seamless look
- Durable one-piece base construction with molded reinforcement for rock-solid strength and lasting performance
- Fits any standard drain (drain not included)
- Reversible drain design offers easy left- or right-hand installation to fit any bathroom layout
- The surface has the appearance of stone, but does not flake or chip like stone and is easy to clean

STONEA 4836 SHOWER BASE - 107913

SKU	Color	Configuration	Dimensions & Weight	Packaging	MSRP
107913-000-270-000	White	End Drain / No Seat Seat / Alcove or Corner	47 1/4” x 35 3/8” x 1” / 38 lb	2.25 ft^3	$ 747
107913-000-325-000	White Marble				$ 845
107913-000-326-000	Grey				$ 796

BASE MODEL/ MODELE DE BASE

Alcove Installation / Installation en alcôve

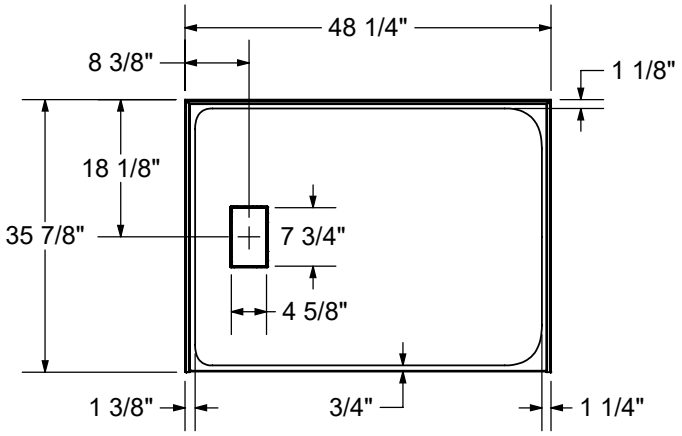

Corner Installation / Installation en coin

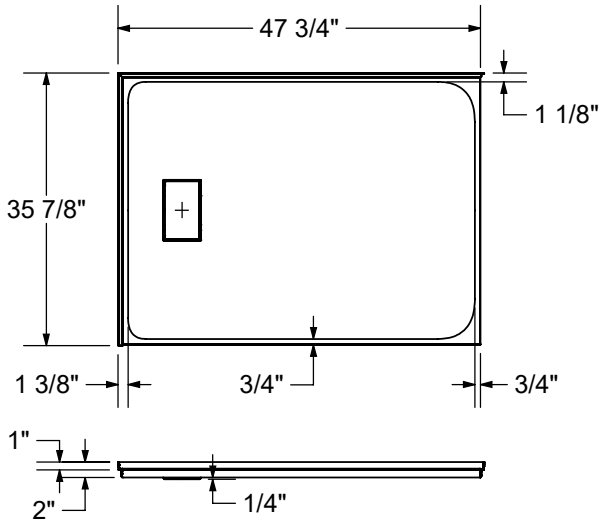

- All dimensions are approximate/Les dimensions sont approximatives
- Structure measurements must be verified against the unit to ensure proper fit/Dimensions de l'unité doivent être vérifié avant l'installation
- Installation to be completed in accordance with manufacturers specifications/Installation doit être faite selon les instructions du manufacturier
- Do not scale drawings/Ne pas mettre à l'échelle les dessins

Go to Table of Contents

Stonea 6032 Shower Base

Material : Solid Surface

Features

- This universal base can be installed in an alcove and a left or right corner. Add-on flanges are included, but not pre-installed for ultimate installation flexibility
- The solid surface lightweight material is robust, long-lasting, and impact resistant, perfect for a shower base
- Versatile base designed to be installed either floor-mounted with a low threshold or recessed in the floor for an even lower threshold to accommodate your needs
- The integrated stone texture provides an anti-slip design for added safety
- Designed with a color match hidden drain plate for a sleek and seamless look
- Durable one-piece base construction with molded reinforcement for rock-solid strength and lasting performance
- Fits any standard drain (drain not included)
- Reversible drain design offers easy left- or right-hand installation to fit any bathroom layout
- The surface has the appearance of stone, but does not flake or chip like stone and is easy to clean

STONEA 6032 SHOWER BASE - 107914

SKU	Color	Configuration	Dimensions & Weight	Packaging	MSRP
107914-000-270-000	White	End Drain / No Seat Seat / Alcove or Corner	59” x 31 1/2” x 1” / 40 lb	2.51 ft^3	$ 780
107914-000-325-000	White Marble				$ 877
107914-000-326-000	Grey				$ 828

Go to Table of Contents

BASE MODEL/ MODELE DE BASE

Alcove Installation / Installation en alcôve

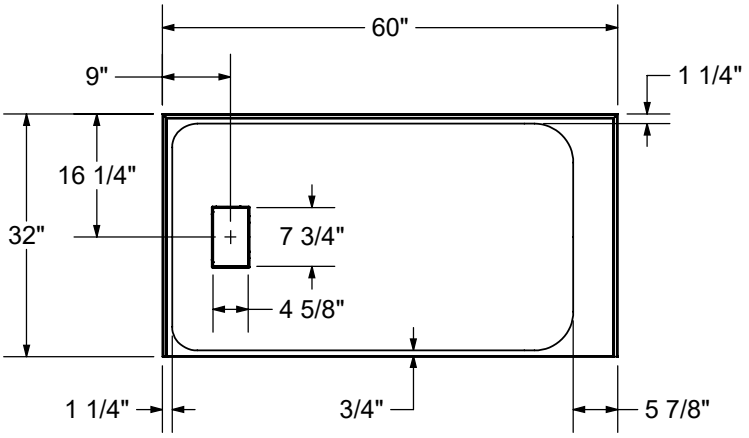

Corner Installation / Installation en coin

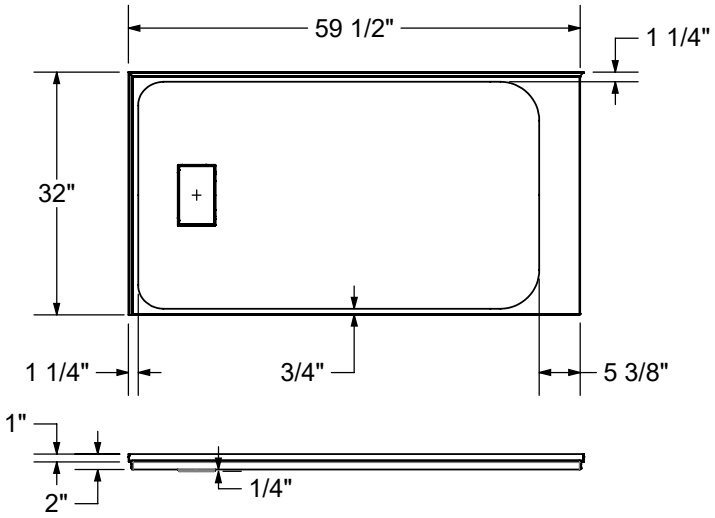

- All dimensions are approximate/Les dimensions sont approximatives
- Structure measurements must be verified against the unit to ensure proper fit/Dimensions de l'unité doivent être vérifié avant l'installation
- Installation to be completed in accordance with manufacturers specifications/Installation doit être faite selon les instructions du manufacturier
- Do not scale drawings/Ne pas mettre à l'échelle les dessins

Stonea 6036 Shower Base

Material : Solid Surface

Features

- This universal base can be installed in an alcove and a left or right corner. Add-on flanges are included, but not pre-installed for ultimate installation flexibility
- The solid surface lightweight material is robust, long-lasting, and impact resistant, perfect for a shower base
- Versatile base designed to be installed either floor-mounted with a low threshold or recessed in the floor for an even lower threshold to accommodate your needs
- The integrated stone texture provides an anti-slip design for added safety
- Designed with a color match hidden drain plate for a sleek and seamless look
- Durable one-piece base construction with molded reinforcement for rock-solid strength and lasting performance
- Fits any standard drain (drain not included)
- Reversible drain design offers easy left- or right-hand installation to fit any bathroom layout
- The surface has the appearance of stone, but does not flake or chip like stone and is easy to clean

STONEA 6036 SHOWER BASE - 107915

SKU	Color	Configuration	Dimensions & Weight	Packaging	MSRP
107915-000-270-000	White	End Drain / No Seat Seat / Alcove or Corner	59” x 35 3/8” x 1” / 44 lb	2.78 ft^3	$ 877
107915-000-325-000	White Marble				$ 910
107915-000-326-000	Grey				$ 893

BASE MODEL/ MODELE DE BASE

Alcove Installation / Installation en alcôve

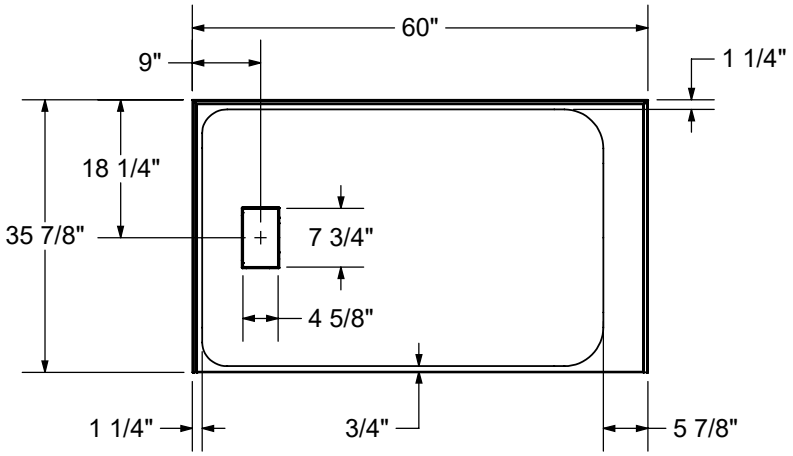

Corner Installation / Installation en coin

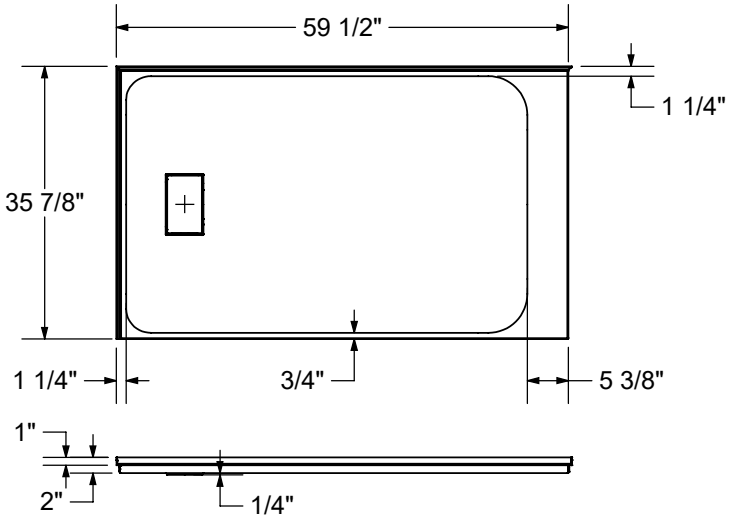

- All dimensions are approximate/Les dimensions sont approximatives
- Structure measurements must be verified against the unit to ensure proper fit/Dimensions de l'unité doivent être vérifié avant l'installation
- Installation to be completed in accordance with manufacturers specifications/Installation doit être faite selon les instructions du manufacturier
- Do not scale drawings/Ne pas mettre à l'échelle les dessins

Barrier Free

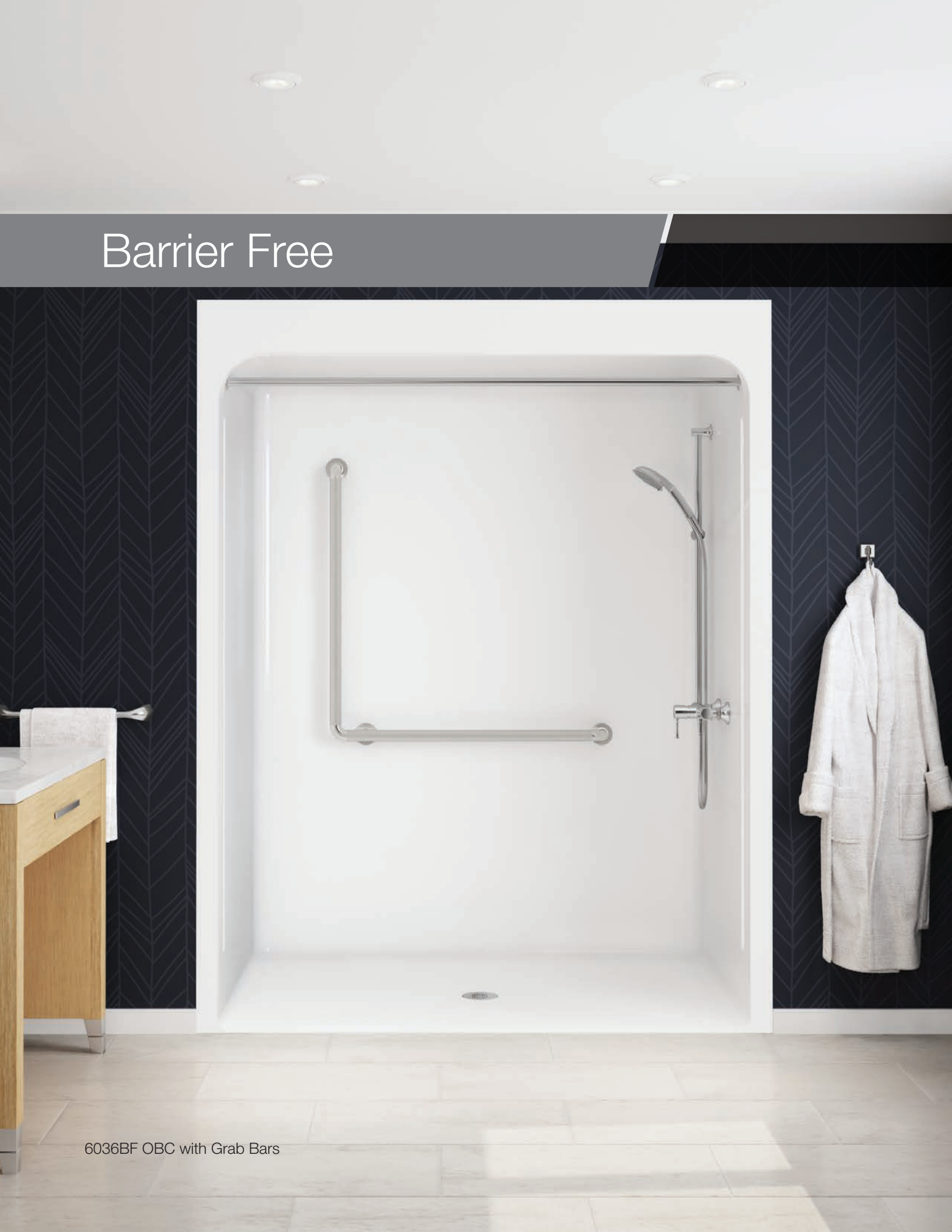

6036BF OBC with Grab Bars

Outlook BFS-6036A (1-Piece)

Material : Acrylic

Features

- Acrylic one-piece roll-in shower with roofcap
- Fully reinforced for customized placement of grab bars and seat
- Stabili-T superior anti-slip pattern enhances balance and stability
- Low threshold design provides a safe and easy step-through entrance and exit for users of all ages
- Grab bars can support up to 300 pounds ensuring safety while showering
- Factory-installed code compliant packages including all options required per different types of codes
- Variety of grab bars and seats available to adapt to any needs
- 25-year warranty for peace of mind
- Made in Canada

OUTLOOK BFS-6036A (1-PIECE) - 107720

SKU		Color	Configuration	Dimensions & Weight	Packaging	MSRP
107720-000-001-100		White	Center Drain / Beveled Treshold / No Seat	67 3/4” x 37” x 87 5/8” / 246 lb	162.74 ft^3	$ 5463
107720-000-001-101						$ 5463
107720-000-001-102			Center Drain / Vertical Treshold / No Seat			$ 5463
107720-000-001-103						$ 5463
107720-000-001-108	NBC		Center Drain / Beveled Treshold / LeftRectangular Naugahyde Seat			$ 5972
107720-000-001-109			Center Drain / Beveled Treshold / RightRectangular Naugahyde Seat			$ 5972
107720-000-001-110			Center Drain / Vertical Treshold / LeftRectangular Naugahyde Seat			$ 5972
107720-000-001-111			Center Drain / Vertical Treshold / RightRectangular Naugahyde Seat			$ 5972
107720-000-001-112			Center Drain / Beveled Treshold / LeftRectangular Phenolic Seat			$ 5972
107720-000-001-113			Center Drain / Beveled Treshold / RightRectangular Phenolic Seat			$ 5972
107720-000-001-114			Center Drain / Vertical Treshold / LeftRectangular Phenolic Seat			$ 5972
107720-000-001-115			Center Drain / Vertical Treshold / RightRectangular Phenolic Seat			$ 5972
107720-000-001-116			Center Drain / Beveled Treshold / LeftL-Shaped Naugahyde Seat			$ 5972
107720-000-001-117			Center Drain / Beveled Treshold / RightL-Shaped Naugahyde Seat			$ 5972
107720-000-001-118			Center Drain / Vertical Treshold / LeftL-Shaped Naugahyde Seat			$ 5972
107720-000-001-119			Center Drain / Vertical Treshold / RightL-Shaped Naugahyde Seat			$ 5972
107720-000-001-120			Center Drain / Beveled Treshold / LeftL-Shaped Phenolic Seat			$ 5972
107720-000-001-121			Center Drain / Beveled Treshold / RightL-Shaped Phenolic Seat			$ 5972
107720-000-001-122			Center Drain / Vertical Treshold / LeftL-Shaped Phenolic Seat			$ 5972
107720-000-001-123			Center Drain / Vertical Treshold / RightL-Shaped Phenolic Seat			$ 5972
107720-000-001-140			Center Drain / Beveled Treshold / LeftRectangular Naugahyde Seat			$ 5972

OUTLOOK BFS-6036A (1-PIECE) - 107720

SKU		Color	Configuration	Dimensions & Weight	Packaging	MSRP
107720-000-001-141	NBC	White	Center Drain / Beveled Treshold / RightRectangular Naugahyde Seat	67 3/4” x 37” x 87 5/8” / 246 lb	162.74 ft^3	$ 5972
107720-000-001-142			Center Drain / Vertical Treshold / LeftRectangular Naugahyde Seat			$ 5972
107720-000-001-143			Center Drain / Vertical Treshold / RightRectangular Naugahyde Seat			$ 5972
107720-000-001-144			Center Drain / Beveled Treshold / LeftRectangular Phenolic Seat			$ 5972
107720-000-001-145			Center Drain / Beveled Treshold / RightRectangular Phenolic Seat			$ 5972
107720-000-001-146			Center Drain / Vertical Treshold / LeftRectangular Phenolic Seat			$ 5972
107720-000-001-147			Center Drain / Vertical Treshold / RightRectangular Phenolic Seat			$ 5972
107720-000-001-148			Center Drain / Beveled Treshold / LeftL-Shaped Naugahyde Seat			$ 5972
107720-000-001-149			Center Drain / Beveled Treshold / RightL-Shaped Naugahyde Seat			$ 5972
107720-000-001-150			Center Drain / Vertical Treshold / LeftL-Shaped Naugahyde Seat			$ 5972
107720-000-001-151			Center Drain / Vertical Treshold / RightL-Shaped Naugahyde Seat			$ 5972
107720-000-001-152			Center Drain / Beveled Treshold / LeftL-Shaped Phenolic Seat			$ 5972
107720-000-001-153			Center Drain / Beveled Treshold / RightL-Shaped Phenolic Seat			$ 5972
107720-000-001-154			Center Drain / Vertical Treshold / LeftL-Shaped Phenolic Seat			$ 5972
107720-000-001-155			Center Drain / Vertical Treshold / RightL-Shaped Phenolic Seat			$ 5972
107720-000-001-172	Basic Model		Center Drain / Beveled Treshold / No Seat			$ 3384
107720-000-001-173			Center Drain / Vertical Treshold / No Seat			$ 3384

COMMON OPTIONS

SKU	Description	MSRP
OPT20056-106	60 in. curtain rod with installation kit Available color: Stainless Steel **(106)**	$ 248
OPT20326-106	30 in. x 40 in. Horizontal L-shaped grab bar with textured finish Available Colors: White **(001)** and Stainless Steel **(106)**	$ 570
OPT20326-001		$ 570
OPT20043-R-381	Rectangular 26 in. fold-up seat with Stainless Steel frame (factory installed) OPT20043-L-**XXX** For left-hand installation OPT20043-R-**XXX** For right-hand installation Available finishes: Naugahyde **(381)** and Phenolic **(382)**	$ 1414
OPT20043-L-382		$ 1414
OPT20043-R-382		$ 1414
OPT20043-L-381		$ 1414
OPT10233	CSA B651 compliant option Please specify finishes/colours when ordering - 24 in. straight grab bar: White **(001)** and Stainless Steel **(106)** - 30 in. straight grab bar: White **(001)** and Stainless Steel **(106)** - 2 X 42 in. straight grab bar: White **(001)** and Stainless Steel **(106)** - 60 in. curtain rod with installation kit: Stainless Steel **(106)** - 60 in. White vinyl shower curtain with Stainless Steel hooks - Solid Brass drain with Stainless Steel grid	$ 2079
OPT20347	72 in. White vinyl shower curtain with Stainless Steel hooks	$ 330
OPT20345	Solid Brass drain with Stainless Steel grid. Quick caulk seal fits a 2 in. schedule 40 steel or plastic pipe.	$ 92
OPT20346		$ 54
OPT20061	Chrome fixture kit for shower including: - Pressure balance mixing valve* - 1-function hand held shower - 24 in. slide bar (factory installed) with 72 in. hose - Vacuum breaker and connector* *Holes drilled not factory installed. Fixture is located on back wall. Specify left or right side.	$ 1382
OPT20034	24 in. Straight grab bar with textured finish [4244] Available colors: White **(001)** and Stainless Steel **(106)**	$ 492

COMMON OPTIONS

SKU	Description	MSRP
OPT20033	30 in. straight grab bar with textured finish [4244] Available colors: White **(001)** and Stainless Steel **(106)**	$ 502
OPT10234	National building code of Canada 2020 compliant option (NBC/BCBC/OBC) Please specify finishes/colours and seat positioning when ordering - 26 in. rectangular fold up seat (left or right): Naugahyde **(381)** and Phenolic **(382)** or - 28 in. L-Shaped fold up seat (left or right): Naugahyde **(381)** and Phenolic **(382)** - 40 in. x 30 in. L-shaped grab bar: White **(001)** and Stainless Steel **(106)** - 42 in. straight grab bar: White **(001)** and Stainless Steel **(106)** - Recessed soap dish (drilled, not installed): White **(001)** and Chrome **(084)** - 60 in. curtain rod with installation kit: Stainless Steel **(106)** - 60 in. White vinyl shower curtain with Stainless Steel hooks	$ 2588
OPT10235	National building code of Canada - 2023 Alberta edition compliant option Please specify finishes/colours and seat positioning when ordering - 26 in. rectangular fold up seat (left or right): Naugahyde **(381)** and Phenolic **(382)** or - 28 in. L-Shaped fold up seat (left or right): Naugahyde **(381)** and Phenolic **(382)** - 40 in. x 30 in. L-shaped grab bar: White **(001)** and Stainless Steel **(106)** - 42 in. straight grab bar: White **(001)** and Stainless Steel **(106)** - Recessed soap dish (drilled, not installed): White **(001)** and Chrome **(084)** - 60 in. curtain rod with installation kit: Stainless Steel **(106)** - 60 in. White vinyl shower curtain with Stainless Steel hooks	$ 2588
OPT20031	42 in. Straight grab gar with textured finish Available colors: White **(001)** and Stainless Steel **(106)**	$ 524
OPT20037	32 in. L-Shaped fold-up seat (specify left or right) OPT20037-L-**XXX** For left-hand installation OPT20037-R-**XXX** For right-hand installation Available finishes: Naugahyde **(381)** and Phenolic **(382)**	$ 1524
OPT20039	28 in. L-Shaped fold-up seat (specify left or right) OPT20039-L-**XXX** For left-hand installation OPT20039-R-**XXX** For right-hand installation Available finishes: Naugahyde **(381)** and Phenolic **(382)**	$ 1524

ACCESSORIES

SKU	Description	MSRP
10020633-002	72 in. White vinyl shower curtain with Stainless Steel hooks	$ 318
10000012-084	Built-in soap dish Available colours: White **(001)** and Chrome **(084)**	$ 324
10000012-001		$ 324
10000064	Solid Brass drain with Stainless Steel grid. Quick caulk seal fits a 2 in. schedule 40 steel or plastic pipe.	$ 83

FOOTNOTES

No	Description
42	Unless otherwise specified, left or right-hand seat determines grab bars and options positioning. Note that left-hand seat inverses grab bars positioning.
44	Optional grab bars and seats can be customized on a base model only. For kitted versions, positioning of the grab bars and seats are pre-determined.

Outlook BFS-6036A (3-Piece)

Material : Acrylic

Features

- Acrylic three-piece roll-in shower with roofcap
- Fully reinforced for customized placement of grab bars and seat
- Stabili-T superior anti-slip pattern enhances balance and stability
- Low threshold design provides a safe and easy step-through entrance and exit for users of all ages
- Grab bars can support up to 300 pounds ensuring safety while showering
- Factory-installed code compliant packages including all options required per different types of codes
- Variety of grab bars and seats available to adapt to any needs
- 25-year warranty for peace of mind
- Made in Canada

OUTLOOK BFS-6036A (3-PIECE) - 107721

SKU		Color	Configuration	Dimensions & Weight	Packaging	MSRP
107721-000-001-104		White	Center Drain / Beveled Treshold / No Seat	67 3/4” x 38 1/4” x 88 3/8” / 246 lb	162.74 ft^3	$ 6007
107721-000-001-105						$ 6007
107721-000-001-106			Center Drain / Vertical Treshold / No Seat			$ 6007
107721-000-001-107						$ 6007
107721-000-001-124	NBC		Center Drain / Beveled Treshold / LeftRectangular Naugahyde Seat			$ 6516
107721-000-001-125			Center Drain / Beveled Treshold / RightRectangular Naugahyde Seat			$ 6516
107721-000-001-126			Center Drain / Vertical Treshold / LeftRectangular Naugahyde Seat			$ 6516
107721-000-001-127			Center Drain / Vertical Treshold / RightRectangular Naugahyde Seat			$ 6516
107721-000-001-128			Center Drain / Beveled Treshold / LeftRectangular Phenolic Seat			$ 6516
107721-000-001-129			Center Drain / Beveled Treshold / RightRectangular Phenolic Seat			$ 6516
107721-000-001-130			Center Drain / Vertical Treshold / LeftRectangular Phenolic Seat			$ 6516
107721-000-001-131			Center Drain / Vertical Treshold / RightRectangular Phenolic Seat			$ 6516
107721-000-001-132			Center Drain / Beveled Treshold / LeftL-Shaped Naugahyde Seat			$ 6516
107721-000-001-133			Center Drain / Beveled Treshold / RightL-Shaped Naugahyde Seat			$ 6516
107721-000-001-134			Center Drain / Vertical Treshold / LeftL-Shaped Naugahyde Seat			$ 6516
107721-000-001-135			Center Drain / Vertical Treshold / RightL-Shaped Naugahyde Seat			$ 6516
107721-000-001-136			Center Drain / Beveled Treshold / LeftL-Shaped Phenolic Seat			$ 6516
107721-000-001-137			Center Drain / Beveled Treshold / RightL-Shaped Phenolic Seat			$ 6516
107721-000-001-138			Center Drain / Vertical Treshold / LeftL-Shaped Phenolic Seat			$ 6516
107721-000-001-139			Center Drain / Vertical Treshold / RightL-Shaped Phenolic Seat			$ 6516
107721-000-001-156			Center Drain / Beveled Treshold / LeftRectangular Naugahyde Seat			$ 6516

OUTLOOK BFS-6036A (3-PIECE) - 107721

SKU		Color	Configuration	Dimensions & Weight	Packaging	MSRP
107721-000-001-157	NBC	White	Center Drain / Beveled Treshold / RightRectangular Naugahyde Seat	67 3/4” x 38 1/4” x 88 3/8” / 246 lb	162.74 ft^3	$ 6516
107721-000-001-158			Center Drain / Vertical Treshold / LeftRectangular Naugahyde Seat			$ 6516
107721-000-001-159			Center Drain / Vertical Treshold / RightRectangular Naugahyde Seat			$ 6516
107721-000-001-160			Center Drain / Beveled Treshold / LeftRectangular Phenolic Seat			$ 6516
107721-000-001-161			Center Drain / Beveled Treshold / RightRectangular Phenolic Seat			$ 6516
107721-000-001-162			Center Drain / Vertical Treshold / LeftRectangular Phenolic Seat			$ 6516
107721-000-001-163			Center Drain / Vertical Treshold / RightRectangular Phenolic Seat			$ 6516
107721-000-001-164			Center Drain / Beveled Treshold / LeftL-Shaped Naugahyde Seat			$ 6516
107721-000-001-165			Center Drain / Beveled Treshold / RightL-Shaped Naugahyde Seat			$ 6516
107721-000-001-166			Center Drain / Vertical Treshold / LeftL-Shaped Naugahyde Seat			$ 6516
107721-000-001-167			Center Drain / Vertical Treshold / RightL-Shaped Naugahyde Seat			$ 6516
107721-000-001-168			Center Drain / Beveled Treshold / LeftL-Shaped Phenolic Seat			$ 6516
107721-000-001-169			Center Drain / Beveled Treshold / RightL-Shaped Phenolic Seat			$ 6516
107721-000-001-170			Center Drain / Vertical Treshold / LeftL-Shaped Phenolic Seat			$ 6516
107721-000-001-171			Center Drain / Vertical Treshold / RightL-Shaped Phenolic Seat			$ 6516
107721-000-001-174	Basic Model		Center Drain / Beveled Treshold / No Seat			$ 3928
107721-000-001-175			Center Drain / Vertical Treshold / No Seat			$ 3928

COMMON OPTIONS

SKU	Description	MSRP
OPT20056-106	60 in. curtain rod with installation kit Available color: Stainless Steel **(106)**	$ 248
OPT20326-106	30 in. x 40 in. Horizontal L-shaped grab bar with textured finish Available Colors: White **(001)** and Stainless Steel **(106)**	$ 570
OPT20326-001		$ 570
OPT20043-R-381	Rectangular 26 in. fold-up seat with Stainless Steel frame (factory installed) OPT20043-L-**XXX** For left-hand installation OPT20043-R-**XXX** For right-hand installation Available finishes: Naugahyde **(381)** and Phenolic **(382)**	$ 1414
OPT20043-L-382		$ 1414
OPT20043-R-382		$ 1414
OPT20043-L-381		$ 1414
OPT10233	CSA B651 compliant option Please specify finishes/colours when ordering - 24 in. straight grab bar: White **(001)** and Stainless Steel **(106)** - 30 in. straight grab bar: White **(001)** and Stainless Steel **(106)** - 2 X 42 in. straight grab bar: White **(001)** and Stainless Steel **(106)** - 60 in. curtain rod with installation kit: Stainless Steel **(106)** - 60 in. White vinyl shower curtain with Stainless Steel hooks - Solid Brass drain with Stainless Steel grid	$ 2079
OPT20347	72 in. White vinyl shower curtain with Stainless Steel hooks	$ 330
OPT20345	Solid Brass drain with Stainless Steel grid. Quick caulk seal fits a 2 in. schedule 40 steel or plastic pipe.	$ 92
OPT20346		$ 54
OPT20061	Chrome fixture kit for shower including: - Pressure balance mixing valve* - 1-function hand held shower - 24 in. slide bar (factory installed) with 72 in. hose - Vacuum breaker and connector* *Holes drilled not factory installed. Fixture is located on back wall. Specify left or right side.	$ 1382
OPT20034	24 in. Straight grab bar with textured finish [4244] Available colors: White **(001)** and Stainless Steel **(106)**	$ 492

COMMON OPTIONS

SKU	Description	MSRP
OPT20033	30 in. straight grab bar with textured finish [4244] Available colors: White **(001)** and Stainless Steel **(106)**	$ 502
OPT10234	National building code of Canada 2020 compliant option (NBC/BCBC/OBC) Please specify finishes/colours and seat positioning when ordering - 26 in. rectangular fold up seat (left or right): Naugahyde **(381)** and Phenolic **(382)** or - 28 in. L-Shaped fold up seat (left or right): Naugahyde **(381)** and Phenolic **(382)** - 40 in. x 30 in. L-shaped grab bar: White **(001)** and Stainless Steel **(106)** - 42 in. straight grab bar: White **(001)** and Stainless Steel **(106)** - Recessed soap dish (drilled, not installed): White **(001)** and Chrome **(084)** - 60 in. curtain rod with installation kit: Stainless Steel **(106)** - 60 in. White vinyl shower curtain with Stainless Steel hooks	$ 2588
OPT10235	National building code of Canada - 2023 Alberta edition compliant option Please specify finishes/colours and seat positioning when ordering - 26 in. rectangular fold up seat (left or right): Naugahyde **(381)** and Phenolic **(382)** or - 28 in. L-Shaped fold up seat (left or right): Naugahyde **(381)** and Phenolic **(382)** - 40 in. x 30 in. L-shaped grab bar: White **(001)** and Stainless Steel **(106)** - 42 in. straight grab bar: White **(001)** and Stainless Steel **(106)** - Recessed soap dish (drilled, not installed): White **(001)** and Chrome **(084)** - 60 in. curtain rod with installation kit: Stainless Steel **(106)** - 60 in. White vinyl shower curtain with Stainless Steel hooks	$ 2588
OPT20031	42 in. Straight grab gar with textured finish Available colors: White **(001)** and Stainless Steel **(106)**	$ 524
OPT20037	32 in. L-Shaped fold-up seat (specify left or right) OPT20037-L-**XXX** For left-hand installation OPT20037-R-**XXX** For right-hand installation Available finishes: Naugahyde **(381)** and Phenolic **(382)**	$ 1524
OPT20039	28 in. L-Shaped fold-up seat (specify left or right) OPT20039-L-**XXX** For left-hand installation OPT20039-R-**XXX** For right-hand installation Available finishes: Naugahyde **(381)** and Phenolic **(382)**	$ 1524

ACCESSORIES

SKU	Description	MSRP
10020633-002	72 in. White vinyl shower curtain with Stainless Steel hooks	$ 318
10000012-084	Built-in soap dish Available colours: White **(001)** and Chrome **(084)**	$ 324
10000012-001		$ 324
10000064	Solid Brass drain with Stainless Steel grid. Quick caulk seal fits a 2 in. schedule 40 steel or plastic pipe.	$ 83

FOOTNOTES

No	Description
42	Unless otherwise specified, left or right-hand seat determines grab bars and options positioning. Note that left-hand seat inverses grab bars positioning.
44	Optional grab bars and seats can be customized on a base model only. For kitted versions, positioning of the grab bars and seats are pre-determined.

Acolyte 6238 - Center drain

Material : Acrylic

Features

- Easy direct-to-stud installation for a hassle-free setup with built-in flanges that firmly secure your shower solution, ensuring long-lasting durability for years to come
- Fully reinforced wall system to accomodate future grab bar placement
- Innovative wall solution featuring a built-in Ulok for precise corner alignment and a pin system to securely hold the 2-piece back wall in place
- Spacious interior dimensions to meet acccessibility code requirements
- Shower base threshold progressively becomes 1 in., allowing easier access for wheelchairs with an entry point of 1/2 in. of height
- Features a Stabili-T anti-slip bottom for enhanced safety and compliance with accessibility shower base requirements
- Base with flat water evacuation lines integrated in the design to help better drain the water towards the drain and provide better reinforcement
- Available with two drain options: ABS, PVC or fire-resistant PVC
- Available with front-installed accessories, whether you choose the code-compliant package or the Premium accessible package

ACOLYTE 6238 ALCOVE FIVE-PIECE SHOWER WITH CENTER DRAIN - 108258

SKU	Package	Color	Configuration	Dimensions & Weight	Packaging	MSRP
108258-113-001-000	Basic Model	White	Center Drain	62 1/2” x 38” x 81 1/8” / 285 lb	43.3 ft³	$ 4282
108258-113-001-101	NBC		Center Drain / Chrome / ABS / Left Seat			$ 6149
108258-113-001-102			Center Drain / Chrome / ABS / Right Seat			$ 6149
108258-113-001-103			Center Drain / Chrome / ABS / Left Seat			$ 6149
108258-113-001-104			Center Drain / Chrome / ABS / Right Seat			$ 6149
108258-113-001-105	Premium		Center Drain			$ 6149
108258-113-001-108	Basic Model					$ 4378
108258-113-001-115	Premium					$ 6244
108258-113-001-116	Basic Model					$ 4378
108258-113-001-122	Premium					$ 6244
108258-113-001-124	Basic Model					$ 4379
108258-113-001-125	NBC		Center Drain / Chrome / Fire-resistant / Left Seat			$ 6245
108258-113-001-126			Center Drain / Chrome / Fire-resistant / Right Seat			$ 6245
108258-113-001-127			Center Drain / Chrome / Fire-resistant / Left Seat			$ 6245
108258-113-001-128			Center Drain / Chrome / Fire-resistant / Right Seat			$ 6245
108258-113-001-129	Premium		Center Drain			$ 6245
108258-113-001-132	Basic Model					$ 4379

ACOLYTE 6238 ALCOVE FIVE-PIECE SHOWER WITH CENTER DRAIN - 108258

SKU	Package	Color	Configuration	Dimensions & Weight	Packaging	MSRP
108258-113-001-139	Premium	White	Center Drain	62 1/2” x 38” x 81 1/8” / 285 lb	43.3 ft^3	$ 6245
108258-113-001-140	Basic Model					$ 4379
108258-113-001-146	Premium					$ 6245
108258-113-001-148	Basic Model					$ 4282
108258-113-001-149	NBC		Center Drain / Chrome / PVC / Left Seat			$ 6149
108258-113-001-150			Center Drain / Chrome / PVC / Right Seat			$ 6149
108258-113-001-151			Center Drain / Chrome / PVC / Left Seat			$ 6149
108258-113-001-152			Center Drain / Chrome / PVC / Right Seat			$ 6149
108258-113-001-153	Premium		Center Drain			$ 6149
108258-113-001-156	Basic Model					$ 4378
108258-113-001-163	Premium					$ 6244
108258-113-001-164	Basic Model					$ 4378
108258-113-001-170	Premium					$ 6244

ACCESSORIES

SKU	Description	MSRP
10029997-002	24 in. modern straight grab bar with flange (front installation) Specify color: White **(002)**, Chrome **(084)**, Brushed Nickel **(105)**	$ 378
10029997-105		$ 378
10029997-084		$ 378
10030084-002	42 in. modern straight grab bar with flange (front installation) Specify color: White (**002**), Chrome (**084**)	$ 469

BASE MODEL WITH NATIONAL BUILDING CODE OF CANADA (NBC/OBC/BCBC/QCC)

LEFT SIDE SHOWN
RIGHT SIDE SYMMETRICAL

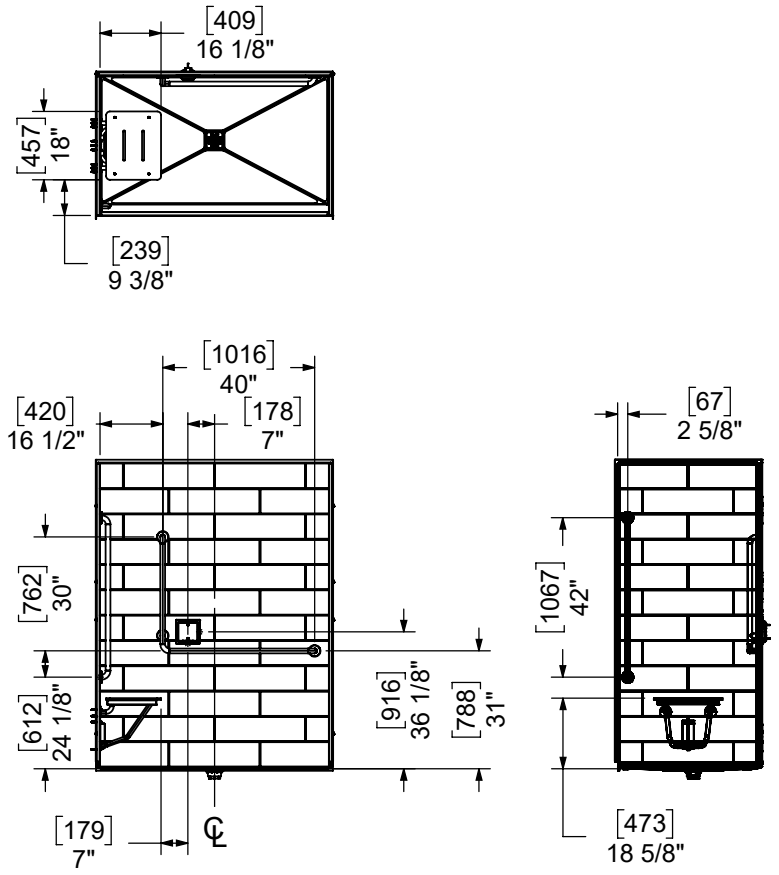

REINFORCEMENT BACKING

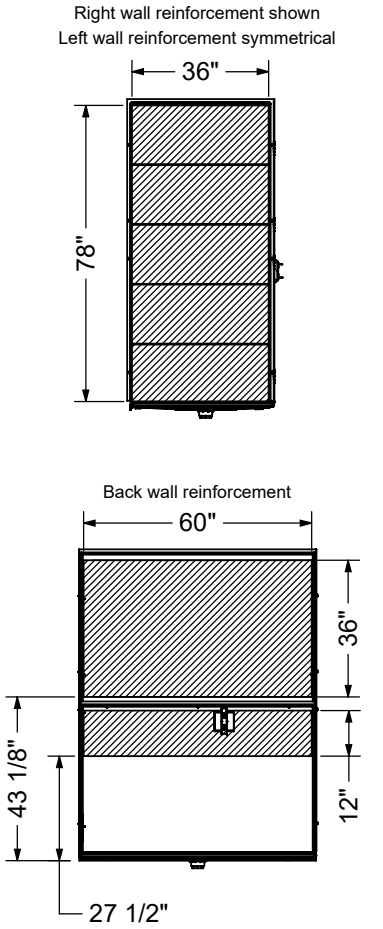

All accessories are not factory installed
Suggested accessories and positions shown for visual reference
All required accessories to meet the construction code not shown
All dimensions are approximate. Structure measurements must be verified against the unit to ensure proper fit.

Outlook BFS-48F

Material : AcrylX

Features

- Made of AcrylX™ applied acrylic for improved durability
- 1-piece shower without roof cap
- Alcove installation
- Integrated textured bottom, easy access design, center drain
- Minimalist and versatile design to fit any bathroom style
- Fully reinforced for customized placement of grab bars and seat
- Timeless white color
- 1-Piece construction for easy installation and maintenance
- Proudly made in Canada

OUTLOOK BFS-48F - 105088

SKU	Color	Configuration	Dimensions & Weight	Packaging	MSRP
105088-000-002-105	White	Center Drain	50 3/4” x 39 1/2” x 78 3/4” / 186 lb	97 ft^3	$ 2608

COMMON OPTIONS

SKU	Description	MSRP
OPT20037	32 in. L-Shaped fold-up seat (specify left or right) OPT20037-L-**XXX** For left-hand installation OPT20037-R-**XXX** For right-hand installation Available finishes: Naugahyde **(381)** and Phenolic **(382)**	$ 1524
OPT20041	Rectangular Fold-up seat (specify left or right) [424445] **OPT 20041-R-XXX for Right-hand installation** **OPT 20041-L-XXX for Left-hand installation** Available finishes: Naugahyde **(381)** and Phenolic **(382)**	$ 1495
OPT20061	Chrome fixture kit for shower including: - Pressure balance mixing valve* - 1-function hand held shower - 24 in. slide bar (factory installed) with 72 in. hose - Vacuum breaker and connector* *Holes drilled not factory installed. Fixture is located on back wall. Specify left or right side.	$ 1382
OPT20084	ADA compliant option [42] Please specify finishes/colors and seat positioning when ordering - L-shaped fold up seat (left or right): Naugahyde (381) and Phenolic (382) - 18 in. straight grab bar: White (001) and Stainless Steel (106) - 30 in. straight grab bar: White (001) and Stainless Steel (106) - 48 in. curtain rod with installation kit. Stainless Steel (106) - 48 in. White vinyl shower curtain with Stainless Steel hooks - Solid Brass drain with Stainless Steel grid	$ 2011
OPT20085	ANSI A117.1-2003 compliant option [42] Please specify finishes/colours and seat positioning when ordering - L-shaped fold up seat (left or right): Naugahyde **(381)** and Phenolic **(382)** - 2 x 18 in. straight grab bars: White **(001)** and Stainless Steel **(106)** - 30 in. straight grab bar: White **(001)** and Stainless Steel **(106)** - 48 in. curtain rod with installation kit. Stainless Steel **(106)** - 48 in. White vinyl shower curtain with Stainless Steel hooks - Solid Brass drain with Stainless Steel grid	$ 2358
OPT20086	CSA B651-04 compliant option [42] Please specify finishes/colours and seat positioning when ordering - Rectangular fold up seat (left or right): Naugahyde **(381)** and Phenolic **(382)** - 30 in. straight grab bar: White **(001)** and Stainless Steel **(106)** - 42 in. straight grab bar: White **(001)** and Stainless Steel **(106)** - 48 in. curtain rod with installation kit. Stainless Steel **(106)** - 48 in. White vinyl shower curtain with Stainless Steel hooks Solid Brass drain with Stainless Steel grid	$ 2306
OPT20054-106	48 in. curtain rod with installation kit Available color: Stainless Steel **(106)**	$ 219

COMMON OPTIONS

SKU	Description	MSRP
OPT20059-L-001	Recessed soap dish (Drilled, not installed) **OPT 20059-L-XXX Left-hand installation** Available colour: White **(001)**	$ 344
OPT20059-L-084	Recessed soap dish (Drilled, not installed) **OPT 20059-L-XXX Left-hand installation** Available colour: Chrome **(084)**	$ 344
OPT20059-R-001	Recessed soap dish (Drilled, not installed) **OPT 20059-R-XXX for Right-hand installation** Available colour: White **(001)**	$ 344
OPT20059-R-084	Recessed soap dish (Drilled, not installed) **OPT 20059-R-XXX for Right-hand installation** Available colour: Chrome **(084)**	$ 344
OPT20031	42 in. Straight grab gar with textured finish Available colors: White **(001)** and Stainless Steel **(106)**	$ 524
OPT20033	30 in. straight grab bar with textured finish [42][44] Available colors: White **(001)** and Stainless Steel **(106)**	$ 502

ACCESSORIES

SKU	Description	MSRP
10000012-084	Built-in soap dish Available colours: White **(001)** and Chrome **(084)**	$ 324
10000012-001		$ 324
10000064	Solid Brass drain with Stainless Steel grid. Quick caulk seal fits a 2 in. schedule 40 steel or plastic pipe.	$ 83

FOOTNOTES

No	Description
42	Unless otherwise specified, left or right-hand seat determines grab bars and options positioning. Note that left-hand seat inverses grab bars positioning.
44	Optional grab bars and seats can be customized on a base model only. For kitted versions, positioning of the grab bars and seats are pre-determined.
45	Maximum one seat per unit. Please refer to the model description.

BASE MODEL

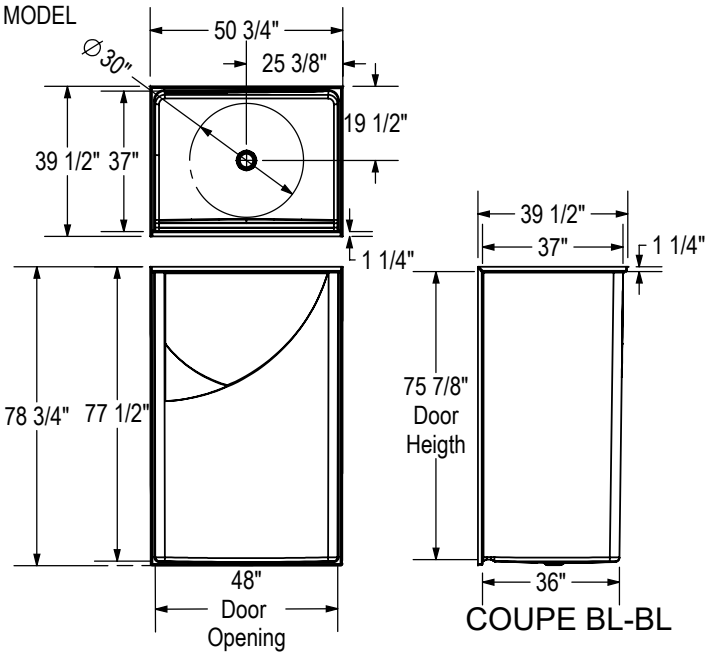

THRESHOLD DETAIL

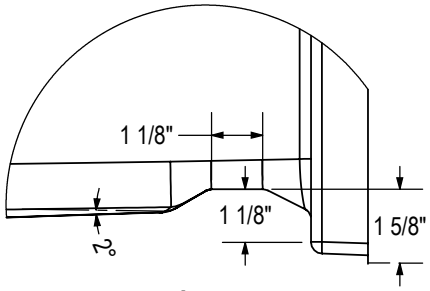

DÉTAIL
ECHELLE 1 : 4

REINFORCEMENT BACKING

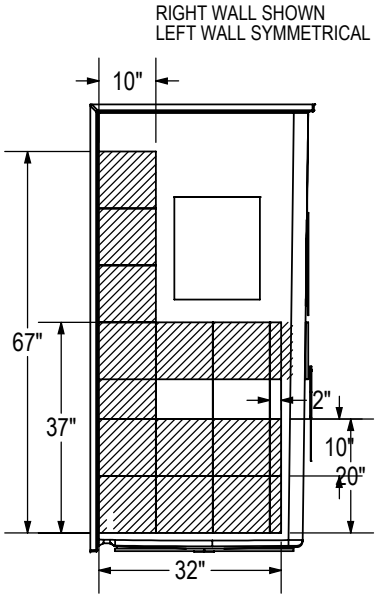

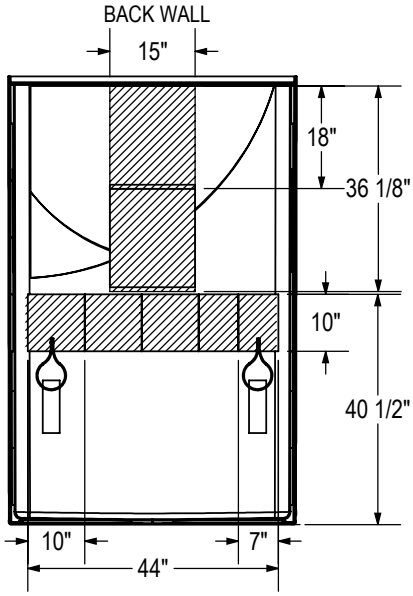

All dimensions are approximate. Structure measurements must be verified against the unit to ensure proper fit.

Outlook BFS-6036F

Material : AcrylX

Features

- Made with high-gloss AcrylX™ finish for enhanced durability
- Alcove installation with front facing flange
- One-piece construction for easy installation and maintenance
- Textured non-slip bottom for added safety
- Wide interior space meeting accessible standards
- Low threshold design provides a safe and easy step-through entrance and exit for users of all ages
- Grab bars can support up to 300 pounds ensuring safety while showering
- Fully reinforced for customized placement of grab bars and seat
- Factory-installed code compliant packages including all options required per different types of codes

OUTLOOK BFS-6036F - 105089

SKU	Package	Color	Configuration	Dimensions & Weight	Packaging	MSRP
105089-000-002-110	Basic Model	White	Center Drain / No Seat	62 1/4” x 39” x 79” / 225 lb	113.58 ft³	$ 2933
105089-000-002-301						$ 5012
105089-000-002-302						$ 5012
105089-000-002-311	NBC		Center Drain / LeftRectangular Phenolic Seat			$ 5521
105089-000-002-312			Center Drain / RightRectangular Phenolic Seat			$ 5521
105089-000-002-313			Center Drain / LeftRectangular Naugahyde Seat			$ 5521
105089-000-002-314			Center Drain / RightRectangular Naugahyde Seat			$ 5521
105089-000-002-315			Center Drain / LeftL-Shaped Phenolic Seat			$ 5521
105089-000-002-316			Center Drain / RightL-Shaped Phenolic Seat			$ 5521
105089-000-002-317			Center Drain / LeftL-Shaped Naugahyde Seat			$ 5521
105089-000-002-318			Center Drain / RightL-Shaped Naugahyde Seat			$ 5521
105089-000-002-321			Center Drain / LeftRectangular Phenolic Seat			$ 5521
105089-000-002-322			Center Drain / RightRectangular Phenolic Seat			$ 5521
105089-000-002-323			Center Drain / LeftRectangular Naugahyde Seat			$ 5521
105089-000-002-324			Center Drain / RightRectangular Naugahyde Seat			$ 5521
105089-000-002-325			Center Drain / LeftL-Shaped Phenolic Seat			$ 5521
105089-000-002-326			Center Drain / RightL-Shaped Phenolic Seat			$ 5521
105089-000-002-327			Center Drain / LeftL-Shaped Naugahyde Seat			$ 5521
105089-000-002-328			Center Drain / RightL-Shaped Naugahyde Seat			$ 5521
105089-000-002-331			Center Drain / LeftL-Shaped Phenolic Seat			$ 5609
105089-000-002-332			Center Drain / RightL-Shaped Phenolic Seat			$ 5609
105089-000-002-333			Center Drain / LeftL-Shaped Naugahyde Seat			$ 5609
105089-000-002-334			Center Drain / RightL-Shaped Naugahyde Seat			$ 5609

COMMON OPTIONS

SKU	Description	MSRP
OPT20056-106	60 in. curtain rod with installation kit Available color: Stainless Steel **(106)**	$ 248
OPT20326-106	30 in. x 40 in. Horizontal L-shaped grab bar with textured finish Available Colors: White **(001)** and Stainless Steel **(106)**	$ 570
OPT20326-001		$ 570

COMMON OPTIONS

SKU	Description	MSRP
OPT20043-R-381	Rectangular 26 in. fold-up seat with Stainless Steel frame (factory installed) OPT20043-L-**XXX** For left-hand installation OPT20043-R-**XXX** For right-hand installation Available finishes: Naugahyde **(381)** and Phenolic **(382)**	$ 1414
OPT20043-L-382		$ 1414
OPT20043-R-382		$ 1414
OPT20043-L-381		$ 1414
OPT10233	CSA B651 compliant option Please specify finishes/colours when ordering - 24 in. straight grab bar: White **(001)** and Stainless Steel **(106)** - 30 in. straight grab bar: White **(001)** and Stainless Steel **(106)** - 2 X 42 in. straight grab bar: White **(001)** and Stainless Steel **(106)** - 60 in. curtain rod with installation kit: Stainless Steel **(106)** - 60 in. White vinyl shower curtain with Stainless Steel hooks - Solid Brass drain with Stainless Steel grid	$ 2079
OPT20347	72 in. White vinyl shower curtain with Stainless Steel hooks	$ 330
OPT20345	Solid Brass drain with Stainless Steel grid. Quick caulk seal fits a 2 in. schedule 40 steel or plastic pipe.	$ 92
OPT20346		$ 54
OPT20061	Chrome fixture kit for shower including: - Pressure balance mixing valve* - 1-function hand held shower - 24 in. slide bar (factory installed) with 72 in. hose - Vacuum breaker and connector* *Holes drilled not factory installed. Fixture is located on back wall. Specify left or right side.	$ 1382
OPT20034	24 in. Straight grab bar with textured finish [4244] Available colors: White **(001)** and Stainless Steel **(106)**	$ 492
OPT20033	30 in. straight grab bar with textured finish [4244] Available colors: White **(001)** and Stainless Steel **(106)**	$ 502
OPT10234	National building code of Canada 2020 compliant option (NBC/BCBC/OBC) Please specify finishes/colours and seat positioning when ordering - 26 in. rectangular fold up seat (left or right): Naugahyde **(381)** and Phenolic **(382)** or - 28 in. L-Shaped fold up seat (left or right): Naugahyde **(381)** and Phenolic **(382)** - 40 in. x 30 in. L-shaped grab bar: White **(001)** and Stainless Steel **(106)** - 42 in. straight grab bar: White **(001)** and Stainless Steel **(106)** - Recessed soap dish (drilled, not installed): White **(001)** and Chrome **(084)** - 60 in. curtain rod with installation kit: Stainless Steel **(106)** - 60 in. White vinyl shower curtain with Stainless Steel hooks	$ 2588
OPT10235	National building code of Canada - 2023 Alberta edition compliant option Please specify finishes/colours and seat positioning when ordering - 26 in. rectangular fold up seat (left or right): Naugahyde **(381)** and Phenolic **(382)** or - 28 in. L-Shaped fold up seat (left or right): Naugahyde **(381)** and Phenolic **(382)** - 40 in. x 30 in. L-shaped grab bar: White **(001)** and Stainless Steel **(106)** - 42 in. straight grab bar: White **(001)** and Stainless Steel **(106)** - Recessed soap dish (drilled, not installed): White **(001)** and Chrome **(084)** - 60 in. curtain rod with installation kit: Stainless Steel **(106)** - 60 in. White vinyl shower curtain with Stainless Steel hooks	$ 2588
OPT10236	ADA/ANSI A117.1 compliant option Please specify finishes/colours and seat positioning when ordering - 32 in. L-Shaped fold up seat (left or right): Naugahyde **(381)** and Phenolic **(382)** - 18 in. straight grab bar: White **(001)** and Stainless Steel **(106)** - 24 in. straight grab bar: White **(001)** and Stainless Steel **(106)** - 30 in. straight grab bar: White **(001)** and Stainless Steel **(106)** - 60 in. curtain rod with installation kit: Stainless Steel **(106)** - 60 in. White vinyl shower curtain with Stainless Steel hooks - Solid Brass drain with Stainless Steel grid	$ 2676
OPT20031	42 in. Straight grab gar with textured finish Available colors: White **(001)** and Stainless Steel **(106)**	$ 524
OPT20037	32 in. L-Shaped fold-up seat (specify left or right) OPT20037-L-**XXX** For left-hand installation OPT20037-R-**XXX** For right-hand installation Available finishes: Naugahyde **(381)** and Phenolic **(382)**	$ 1524
OPT20039	28 in. L-Shaped fold-up seat (specify left or right) OPT20039-L-**XXX** For left-hand installation OPT20039-R-**XXX** For right-hand installation Available finishes: Naugahyde **(381)** and Phenolic **(382)**	$ 1524

ACCESSORIES

SKU	Description	MSRP
10020633-002	72 in. White vinyl shower curtain with Stainless Steel hooks	$ 318

ACCESSORIES

SKU	Description	MSRP
10000012-084	Built-in soap dish Available colours: White **(001)** and Chrome **(084)**	$ 324
10000012-001		$ 324
10000064	Solid Brass drain with Stainless Steel grid. Quick caulk seal fits a 2 in. schedule 40 steel or plastic pipe.	$ 83

FOOTNOTES

No	Description
42	Unless otherwise specified, left or right-hand seat determines grab bars and options positioning. Note that left-hand seat inverses grab bars positioning.
44	Optional grab bars and seats can be customized on a base model only. For kitted versions, positioning of the grab bars and seats are pre-determined.

Outlook BFS-60F

Material : AcrylX

Features

- Made of AcrylX™ applied acrylic for improved durability
- 1-piece shower without roof cap
- Alcove installation
- Integrated textured bottom, easy access design, center drain
- Minimalist and versatile design to fit any bathroom style
- Fully reinforced for customized placement of grab bars and seat
- Timeless white color
- 1-Piece construction for easy installation and maintenance
- Proudly made in Canada

OUTLOOK BFS-60F - 105247

SKU	Color	Configuration	Dimensions & Weight	Packaging	MSRP
105247-000-002-000	White	Center Drain	62 3/4” x 33 1/2” x 78 3/4” / 195 lb	105 ft^3	$ 2825

COMMON OPTIONS

SKU	Description	MSRP
OPT20034	24 in. Straight grab bar with textured finish [4244] Available colors: White **(001)** and Stainless Steel **(106)**	$ 492
OPT20039	28 in. L-Shaped fold-up seat (specify left or right) OPT20039-L-**XXX** For left-hand installation OPT20039-R-**XXX** For right-hand installation Available finishes: Naugahyde **(381)** and Phenolic **(382)**	$ 1524
OPT20043-R-381	Rectangular 26 in. fold-up seat with Stainless Steel frame (factory installed) OPT20043-L-**XXX** For left-hand installation OPT20043-R-**XXX** For right-hand installation Available finishes: Naugahyde **(381)** and Phenolic **(382)**	$ 1414
OPT20043-L-382		$ 1414
OPT20043-R-382		$ 1414
OPT20043-L-381		$ 1414
OPT20061	Chrome fixture kit for shower including: - Pressure balance mixing valve* - 1-function hand held shower - 24 in. slide bar (factory installed) with 72 in. hose - Vacuum breaker and connector* *Holes drilled not factory installed. Fixture is located on back wall. Specify left or right side.	$ 1382
OPT20091	ADA compliant option [42] Please specify finishes/colours and seat positioning when ordering - L-shaped fold up seat (left or right): Naugahyde **(381)** and Phenolic **(382)** - 24 in. straight grab bar: White **(001)** and Stainless Steel **(106)** - 42 in. straight grab bar: White **(001)** and Stainless Steel **(106)** - 60 in. curtain rod with installation kit. Stainless Steel **(106)** - 60 in. White vinyl shower curtain with Stainless Steel hooks - Solid Brass drain with Stainless Steel grid	$ 2030
OPT20092	ANSI A117.1-2003 compliant option [42] Please specify finishes/colours and seat positioning when ordering - L-shaped fold up seat (left or right): Naugahyde **(381)** and Phenolic **(382)** - 24 in. straight grab bars: White **(001)** and Stainless Steel **(106)** - 30 in. straight grab bar: White **(001)** and Stainless Steel **(106)** - 60 in. curtain rod with installation kit. Stainless Steel **(106)** - 60 in. White vinyl shower curtain with Stainless Steel hooks Solid Brass drain with Stainless Steel grid	$ 1824

COMMON OPTIONS

SKU	Description	MSRP
OPT20093	CSA B651-04 compliant option [42] Please specify finishes/colors and seat positioning when ordering - Rectangular fold up seat (left or right): Naugahyde **(381)** and Phenolic **(382)** - 24 in. straight grab bar: White **(001)** and Stainless Steel **(106)** - 30 in. straight grab bar: White **(001)** and Stainless Steel **(106)** - 2 x 42 in. straight grab bar: White **(001)** and Stainless Steel **(106)** - 60 in. curtain rod with installation kit. Stainless Steel **(106)** - 60 in. White vinyl shower curtain with Stainless Steel hooks - Solid Brass drain with Stainless Steel grid	$ 3153
OPT20056-106	60 in. curtain rod with installation kit Available color: Stainless Steel **(106)**	$ 248
OPT20059-L-001	Recessed soap dish (Drilled, not installed) **OPT 20059-L-XXX Left-hand installation** Available colour: White **(001)**	$ 344
OPT20059-L-084	Recessed soap dish (Drilled, not installed) **OPT 20059-L-XXX Left-hand installation** Available colour: Chrome **(084)**	$ 344
OPT20059-R-001	Recessed soap dish (Drilled, not installed) **OPT 20059-R-XXX for Right-hand installation** Available colour: White **(001)**	$ 344
OPT20059-R-084	Recessed soap dish (Drilled, not installed) **OPT 20059-R-XXX for Right-hand installation** Available colour: Chrome **(084)**	$ 344
OPT20031	42 in. Straight grab gar with textured finish Available colors: White **(001)** and Stainless Steel **(106)**	$ 524
OPT20033	30 in. straight grab bar with textured finish [4244] Available colors: White **(001)** and Stainless Steel **(106)**	$ 502

ACCESSORIES

SKU	Description	MSRP
10000012-084	Built-in soap dish Available colours: White **(001)** and Chrome **(084)**	$ 324
10000012-001		$ 324
10000064	Solid Brass drain with Stainless Steel grid. Quick caulk seal fits a 2 in. schedule 40 steel or plastic pipe.	$ 83
10020633-002	72 in. White vinyl shower curtain with Stainless Steel hooks	$ 318

FOOTNOTES

No	Description
42	Unless otherwise specified, left or right-hand seat determines grab bars and options positioning. Note that left-hand seat inverses grab bars positioning.
44	Optional grab bars and seats can be customized on a base model only. For kitted versions, positioning of the grab bars and seats are pre-determined.

Go to Table of Contents

BASE MODEL

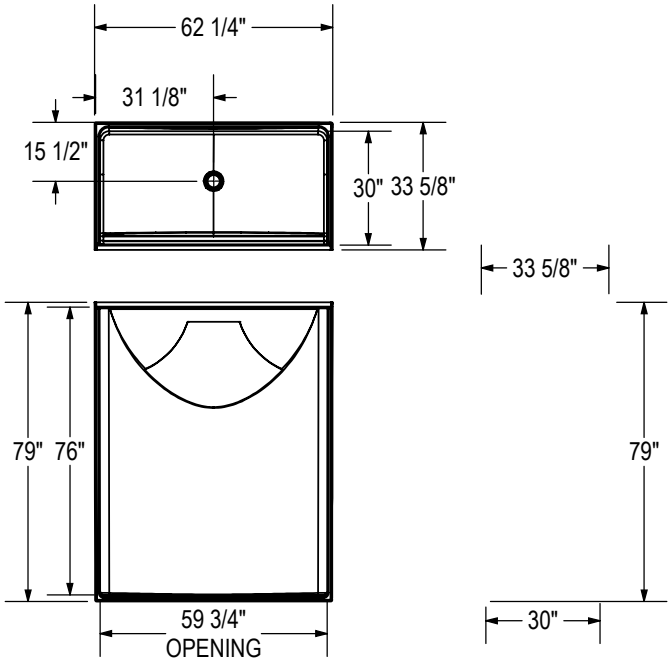

THRESHOLD DETAIL

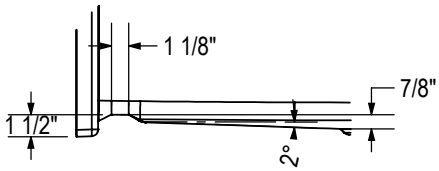

REINFORCEMENT BACKING

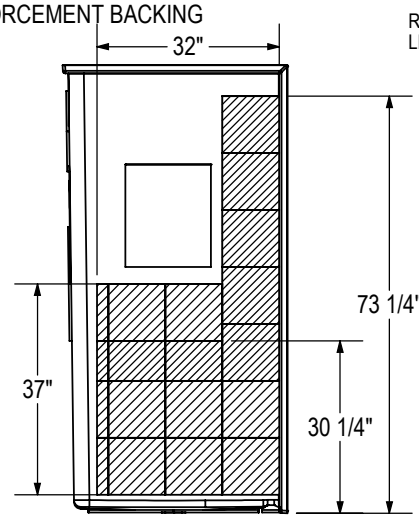

RIGHT WALL SHOWN
LEFT WALL SYMMETRICAL

BACK WALL

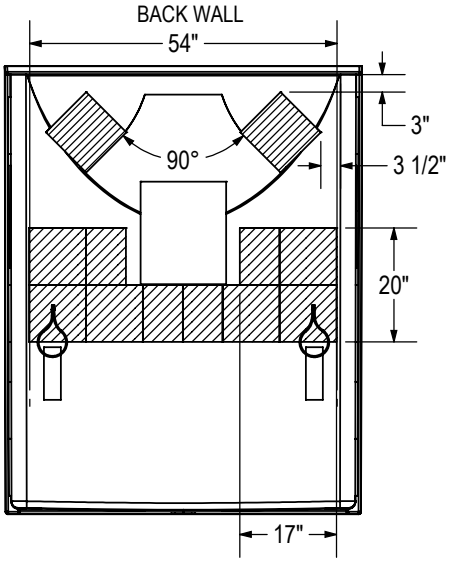

All dimensions are approximate. Structure measurements must be verified against the unit to ensure proper fit.

Acolyte 6238 - Linear drain

Material : AcrylX

Features

- Easy direct-to-stud installation for a hassle-free setup with built-in flanges that firmly secure your shower solution, ensuring long-lasting durability for years to come
- Fully reinforced wall system to accomodate future grab bar placement
- Innovative wall solution featuring a built-in Ulok for precise corner alignment and a pin system to securely hold the 2-piece back wall in place
- Spacious interior dimensions to meet acccessibility code requirements
- Shower base threshold progressively becomes 1 1/8 in., allowing easier access for wheelchairs with an entry point of 1/2 in. of height
- Features a Stabili-T anti-slip bottom for enhanced safety and compliance with accessibility shower base requirements
- Designed with Fusion Drain assembly, a factory pre-installed drain that simplifies installation and provides peace of mind
- Available with two drain options: ABS or fire-resistant PVC
- Available with front-installed accessories, whether you choose the code-compliant package or the Premium accessible package

ACOLYTE 6238 ALCOVE FIVE-PIECE SHOWER WITH LINEAR DRAIN - 108259

SKU	Package	Color	Configuration	Dimensions & Weight	Packaging	MSRP
108259-113-002-000	Basic Model	White	Front Drain	62 1/2” x 38” x 82 1/8” / 288 lb	39.97 ft³	$ 4563
108259-113-002-101	NBC		Front Drain / Chrome / ABS / Left Seat			$ 6430
108259-113-002-102			Front Drain / Chrome / ABS / Right Seat			$ 6430
108259-113-002-103			Front Drain / Chrome / ABS / Left Seat			$ 6430
108259-113-002-104			Front Drain / Chrome / ABS / Right Seat			$ 6430
108259-113-002-105	Premium		Front Drain			$ 6430
108259-113-002-106						$ 6430
108259-113-002-108	Basic Model					$ 4563
108259-113-002-109	NBC		Front Drain / White / ABS / Left Seat			$ 6430
108259-113-002-110			Front Drain / White / Fire-resistant / Right Seat			$ 6430
108259-113-002-111			Front Drain / White / Fire-resistant / Left Seat			$ 6430
108259-113-002-112			Front Drain / White / Fire-resistant / Right Seat			$ 6430
108259-113-002-113	Premium		Front Drain			$ 6430
108259-113-002-114						$ 6430
108259-113-002-115						$ 6430
108259-113-002-116	Basic Model					$ 4658
108259-113-002-117	NBC		Front Drain / Chrome / Fire-resistant / Left Seat			$ 6524
108259-113-002-118			Front Drain / Chrome / Fire-resistant / Right Seat			$ 6524
108259-113-002-119			Front Drain / Chrome / Fire-resistant / Left Seat			$ 6524

ACOLYTE 6238 ALCOVE FIVE-PIECE SHOWER WITH LINEAR DRAIN - 108259

SKU	Package	Color	Configuration	Dimensions & Weight	Packaging	MSRP
108259-113-002-120	NBC	White	Front Drain / Chrome / Fire-resistant / Right Seat	62 1/2” x 38” x 82 1/8” / 288 lb	39.97 ft^3	$ 6524
108259-113-002-121	Premium		Front Drain			$ 6524
108259-113-002-122						$ 6524
108259-113-002-124	Basic Model					$ 4658
108259-113-002-125	NBC		Front Drain / White / Fire-resistant / Left Seat			$ 6524
108259-113-002-126			Front Drain / White / Fire-resistant / Right Seat			$ 6524
108259-113-002-127			Front Drain / White / Fire-resistant / Left Seat			$ 6524
108259-113-002-128			Front Drain / White / Fire-resistant / Right Seat			$ 6524
108259-113-002-129	Premium		Front Drain			$ 6524
108259-113-002-130						$ 6524
108259-113-002-131						$ 6524

ACCESSORIES

SKU	Description	MSRP
10029997-002	24 in. modern straight grab bar with flange (front installation) Specify color: White **(002)**, Chrome **(084)**, Brushed Nickel **(105)**	$ 378
10029997-105		$ 378
10029997-084		$ 378
10030084-002	42 in. modern straight grab bar with flange (front installation) Specify color: White (**002**), Chrome (**084**)	$ 469

BASE MODEL

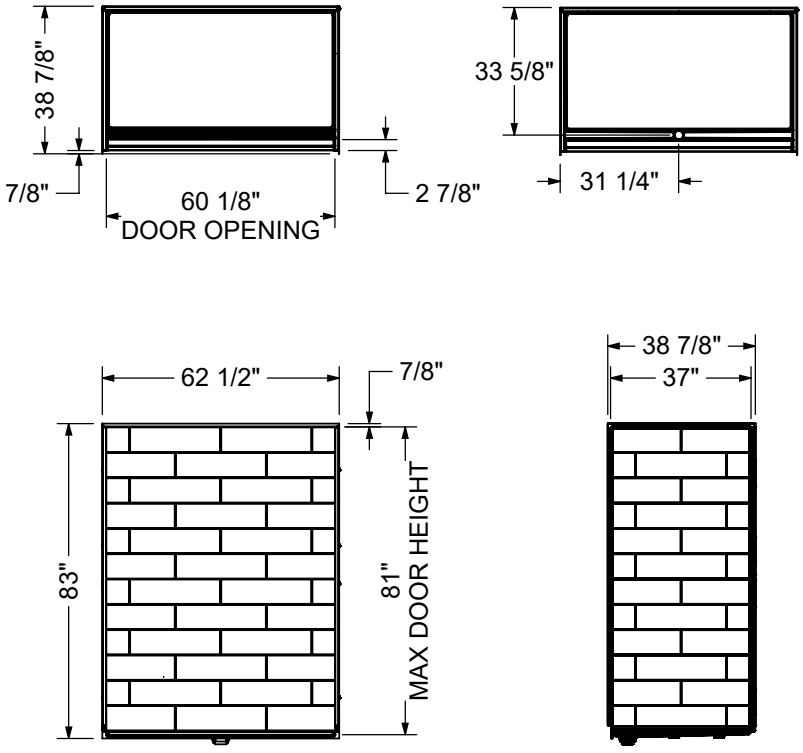

REINFORCEMENT BACKING

Right wall reinforcement shown
Left wall reinforcement symmetrical

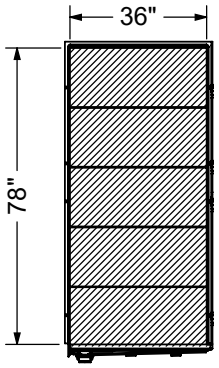

Back wall reinforcement

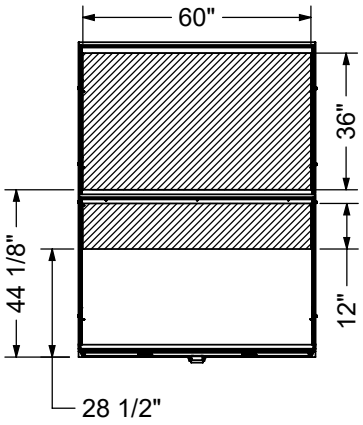

All dimensions are approximate. Structure measurements must be verified against the unit to ensure proper fit.

Acolyte 6238 - Center drain

Material : Acrylic

Features

- Rectangular barrier-free alcove shower base with a modern square center drain
- Threshold progressively becomes 1 in., allowing easier access for wheelchairs with an entry point of 1/2 in. of height
- Integrated 1 1/4 in. tiling flanges along the base to ensure a secure and easier alcove installation
- Multiple drain grid finishes are available to match other finishes in your bathroom (white, chrome or matte black)
- Square grid and complete drain assembly included (ABS or PVC available)
- Designed with Stabili-T anti-slip bottom that meets the requirements for accessibility shower bases
- Flat water evacuation lines are integrated in the design to help better drain the water towards the drain and provide better reinforcement
- Built with extra support, this shower base is safe and sturdy for all users

ACOLYTE 6238 - 107933

SKU	Color	Configuration	Dimensions & Weight	Packaging	MSRP
107933-541-001-000	White	Center Drain / Alcove - Stabili-T	62 3/8” x 38” x 1” / 42 lb	7.88 ft^3	$ 1586
107933-541-001-111					$ 1586
107933-541-001-112					$ 1586
107933-541-001-113					$ 1586
107933-541-001-114					$ 1586
107933-541-001-115					$ 1586
107933-541-001-116					$ 1586
107933-541-001-117					$ 1586
107933-541-001-118					$ 1586

Go to Table of Contents

BASE

The hatched area represents
the Stabili-T surface

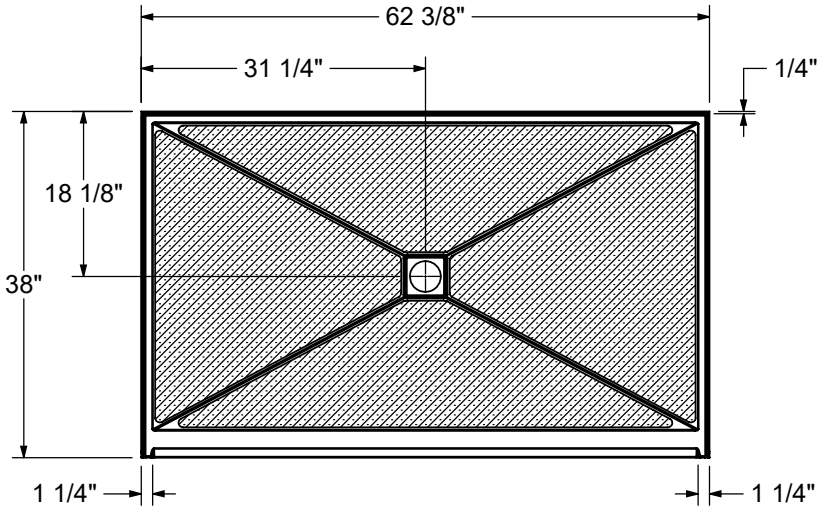

THRESHOLD DETAIL

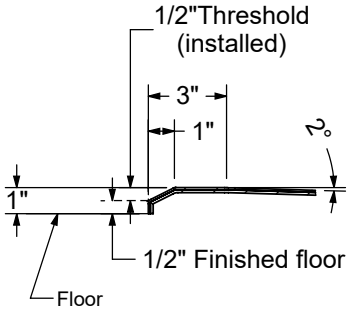

DRAIN INCLUDED

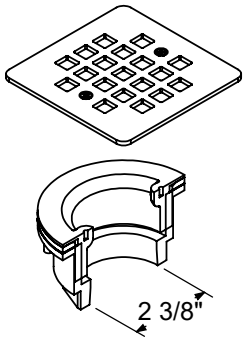

All dimensions are approximate. Structure measurements
must be verified against the unit to ensure proper fit.

Go to Table of Contents

Outlook Base 4836

Material : AcrylX

Features

- AcrylX base with round drain
- Barrier free threshold
- Integrated textured bottom
- Center drain

OUTLOOK 4836 - 106687

SKU	Color	Configuration	Dimensions & Weight	MSRP
106687-000-002-000	White	Center Drain / Alcove	37” x 48” x 7/8” / 56 lb	$ 1946

Go to Table of Contents

OUTLOOK BASE 4836

37" X 48" X 7/8"

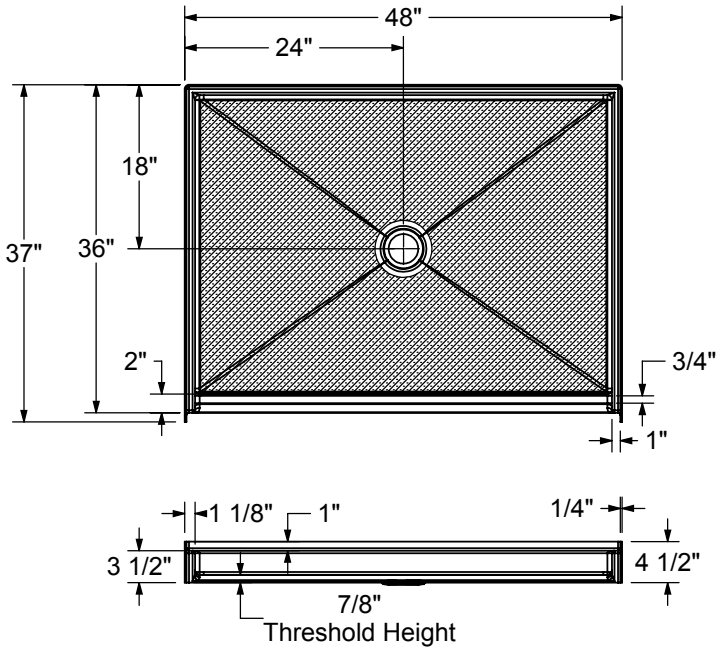

THRESHOLD DETAIL

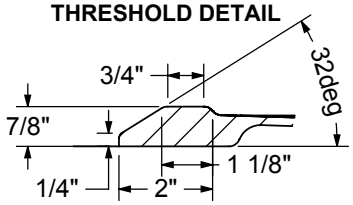

All dimensions are approximate. Structure measurements must be verified against the unit to ensure proper fit.

Outlook Base 6030 C

Material : AcrylX

Features

- AcrylX base with round drain
- Barrier free threshold
- Integrated textured bottom
- Center drain

OUTLOOK 6030 C - 106630

SKU	Color	Configuration	Dimensions & Weight	MSRP
106630-000-002-000	White	Center Drain / Alcove	31” x 60” x 3/4” / 56 lb	$ 1946

OUTLOOK BASE 6030 C

31" X 60" X 3/4"

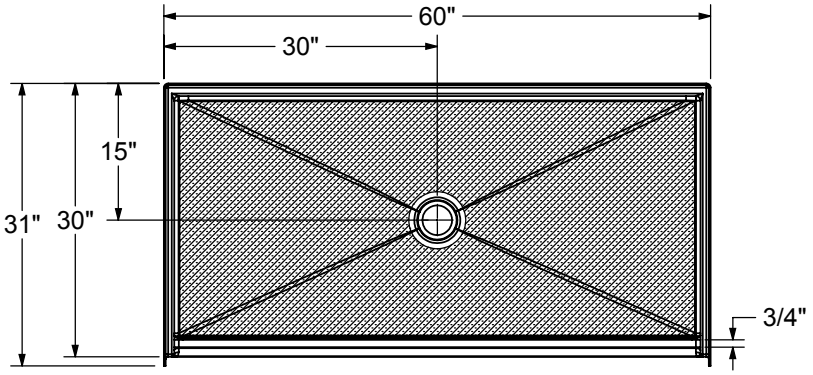

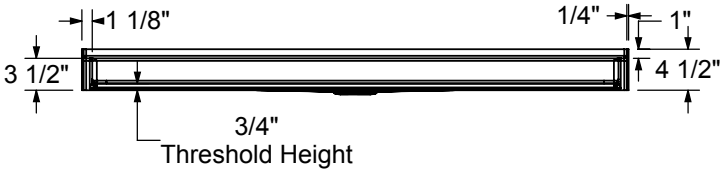

THRESHOLD DETAIL

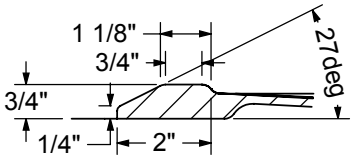

All dimensions are approximate. Structure measurements must be verified against the unit to ensure proper fit.

Go to Table of Contents

Outlook Base 6030 L/R

Material : AcrylX

Features

- AcrylX base with round drain
- Barrier free threshold
- Integrated textured bottom
- Left/Right handed drain

OUTLOOK 6030 L/R - 106856

SKU	Color	Configuration	Dimensions & Weight	MSRP
106856-000-002-001	White	Left Drain / Alcove	31” x 60” x 1” / 56 lb	$ 1946
106856-000-002-002		Right Drain / Alcove		$ 1946

OUTLOOK BASE 6030 L/R

31" X 60" X 1"

Rigth drain model shown / Left drain model symmetrical

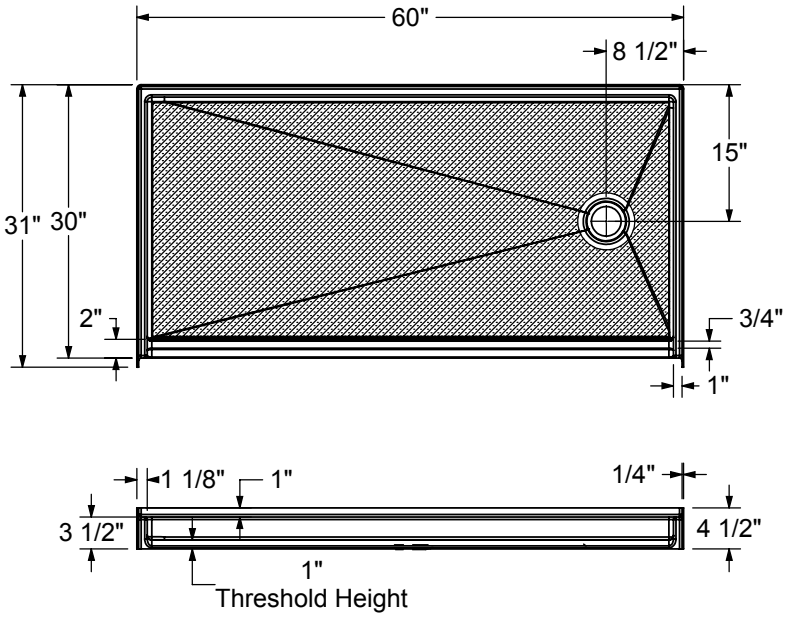

THRESHOLD DETAIL

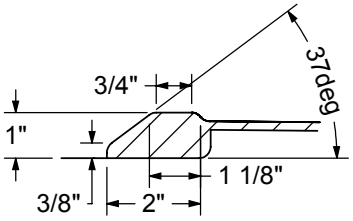

All dimensions are approximate. Structure measurements must be verified against the unit to ensure proper fit.

Go to Table of Contents

Outlook Base 6036

Material : AcrylX

Features

- AcrylX base with round drain
- Barrier free threshold
- Integrated textured bottom
- Center drain

OUTLOOK 6036 - 106631

SKU	Color	Configuration	Dimensions & Weight	MSRP
106631-000-002-000	White	Center Drain / Alcove	37” x 60” x 7/8” / 63 lb	$ 2101

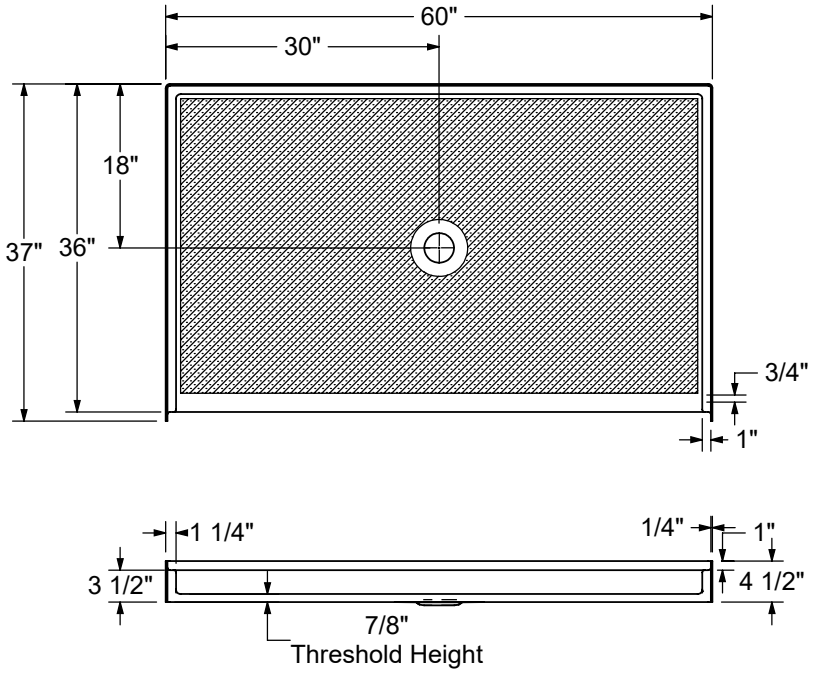

THRESHOLD DETAIL

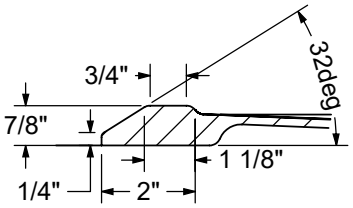

All dimensions are approximate. Structure measurements must be verified against the unit to ensure proper fit.

Go to Table of Contents

Outlook Base 6238

Material : AcrylX

Features

- AcrylX base with round drain
- Barrier free threshold
- Integrated textured bottom
- Center drain
- CSA compliant

OUTLOOK 6238 - 106857

SKU	Color	Configuration	Dimensions & Weight	MSRP
106857-000-002-000	White	Center Drain / Alcove	38 1/4” x 62 1/2” x 3/4” / 70 lb	$ 2191

OUTLOOK BASE 6238

38 1/4" X 62 1/2" X 3/4"

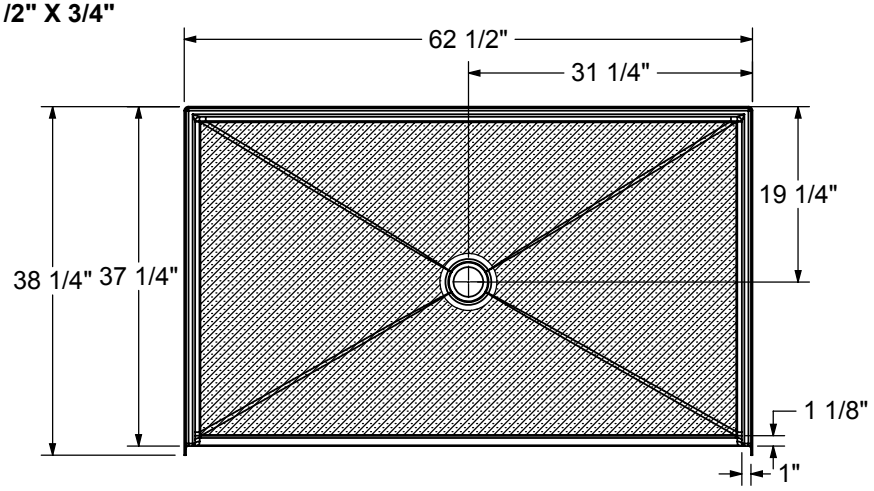

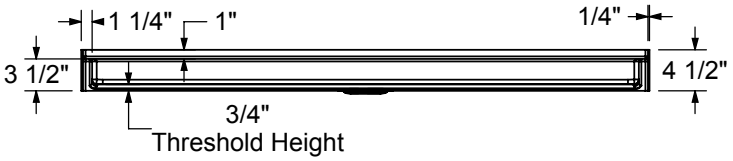

THRESHOLD DETAIL

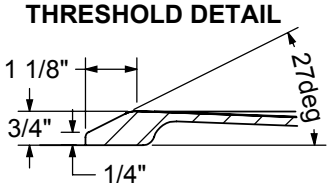

All dimensions are approximate. Structure measurements must be verified against the unit to ensure proper fit.

Acolyte 6238 - Linear drain

Material : AcrylX

Features

- Spacious interior floor dimensions to meet acccessibility code requirements
- Threshold progressively becomes 1 1/8 in., allowing easier access for wheelchairs with an entry point of 1/2 in. of height
- Integrated 1 1/4 in. tiling flanges along the base to ensure a secure and easier alcove installation
- Multiple trench grid finishes are available to match other finishes in your bathroom (white or chrome)
- Designed with Fusion Drain assembly, a factory pre-installed drain that simplifies installation and provides peace of mind.
- Features a Stabili-T anti-slip bottom for enhanced safety and compliance with accessibility shower base requirements
- Available with two drain options: ABS or fire-resistant PVC.
- Front drain with a linear stainless steel grid for efficient water drainage and secure, safe footing
- Compatible with Acolyte shower walls, most glue-up shower walls and ceramic tiles

ACOLYTE 6238 ACRYLX™ - 108238

SKU	Color	Configuration	Dimensions & Weight	Packaging	MSRP
108238-140-002-000	White	Front Drain / Alcove	62 3/8” x 38” x 1 1/8” / 48 lb	10.11 ft^3	$ 1867
108238-140-002-111					$ 1867
108238-140-002-112					$ 1961
108238-140-002-113					$ 1961

Walls

Denso 3636 corner walls

Wall Kits - Alcove Shower - Subway

Material : SolidSurface

Features

- Shower kit includes: 2-piece back wall, 2 side walls, finishing trims, double face tape and silicone application tool
- Glue-up installation
- Realistic tile wall look made of durable solid surface material with textured grout lines
- 4-piece wall set packaged in one compact box making it easy to handle and install
- Proudly made in North America
- Panels can be easily cut to adapt to most shower spaces up to 36 in. deep and fit on most products
- Featuring Evergrout™: the first realistic and textured grout lines with that won't crack or leak
- No tile or grout protective sealer required
- Installs easily in just 1 day versus 3 days for standard ceramic tile

VERSALINE 6036 SUBWAY SHOWER WALL KIT - 107180

SKU	Color	Dimensions & Weight	Packaging	MSRP
107180-000-270-000	White	60" x 36 1/4" x 72" / 90 lb	5.64 ft^3	$ 2086

VERSALINE 4836 SUBWAY SHOWER WALL KIT - 107182

SKU	Color	Dimensions & Weight	Packaging	MSRP
107182-000-270-000	White	48" x 36 1/4" x 72" / 85 lb	5.64 ft^3	$ 1867

Wall Kits - Alcove Shower - Vertical

Material : SolidSurface

Features

- Shower kit includes: 2-piece back wall, 2 side walls, finishing trims, double face tape and silicone application tool
- Glue-up installation
- Realistic tile wall look made of durable solid surface material with textured grout lines
- 4-piece wall set packaged in one compact box making it easy to handle and install
- Proudly made in North America
- Panels can be easily cut to adapt to most shower spaces up to 36 in. deep and fit on most products
- Featuring Evergrout™: the first realistic and textured grout lines with that won't crack or leak
- No tile or grout protective sealer required
- Installs easily in just 1 day versus 3 days for standard ceramic tile

VERSALINE 6036 VERTICAL SHOWER WALL KIT - 107181

SKU	Color	Dimensions & Weight	Packaging	MSRP
107181-000-270-000	White	60" x 36 1/4" x 72" / 90 lb	5.64 ft^3	$ 2086

VERSALINE 4836 VERTICAL SHOWER WALL KIT - 107183

SKU	Color	Dimensions & Weight	Packaging	MSRP
107183-000-270-000	White	48" x 36 1/4" x 72" / 85 lb	5.64 ft^3	$ 1867

Denso 36 in. Wall Kit - Modern Subway

Material : SolidSurface

Features

- Install by itself for a corner shower or Pair with Denso backwall in either 50-inch width (107226-000-270-000) or 62-inch width (107225-000-270-000) for an alcove shower or tub-shower installation
- Composite walls made of durable high-quality SolidSurface material for an unprecedented peace of mind, with realistic tile look and textured grout lines for a stunning look at a lower cost.
- Solid 1-piece wall panels designed to be cut-to-fit to ensure compatibility with all configurations, to be installed directly on drywall or over tile for maximum versatility.
- For added convenience built in a stylish storage solution, see MAAX Glass Shelves featured in the image carousel. Refer to part number: 10042818 Corner Shelf, 10042819 Rectangular Shelf.
- Compatible with most existing bathtub, shower bases and shower doors. Take a look at MAAX's vast product line for inspiration: https://www.homedepot.ca/search?q=maax#!q=maax

DENSO 36 IN. - MODERN SUBWAY - 107223

SKU	Color	Dimensions & Weight	MSRP
107223-000-270-000	White	36” x 1/4” x 84” / 80 lb	$ 1623

DENSO 42 IN. - MODERN SUBWAY - 107224

SKU	Color	Dimensions & Weight	MSRP
107224-000-270-000	White	42” x 1/4” x 84” / 93 lb	$ 1933

ACCESSORIES

SKU	Description	MSRP
10060311	Corner glass shelf (9 3/8 x 9 3/8 in.) (sold separately) 10 mm frosted glass with a clear band along the edge Compatible with Utile and tile shower walls	$ 174

RECOMMENDED DOORS - VISIT OUR WEBSITE FOR A COMPLETE LIST OF RECOMMENDED DOORS

SKU	Product Name	Pag.
137443	Radia Neo-round 32 x 32 x 71 ½ - 6mm	953
137447	Radia Square 32 x 32 x 71 ½ - 6mm	957
137444	Radia Neo-round 36 x 36 x 71 ½ - 6mm	953
137448	Radia Square 36 x 36 x 71 ½ - 6mm	957
137446	Radia Round 36 x 36 x 71 ½ - 6mm	955
137440	Radia Neo-angle 36 x 36 x 71 ½ - 6mm	951

Denso 36 in. Wall Kit - Traditional Subway

Material : SolidSurface

Features

- 36-inch wide shower or tub-shower 2 sidewalls kit with a 12-inch by 24-inch horizontal Traditional Subway Tile pattern in a beautiful matte white finish
- Install by itself for a corner shower or Pair with Denso backwall in either 50-inch width (107230-000-270-000) or 62-inch width (107229-000-270-000) for an alcove shower or tub-shower installation
- Composite walls made of durable high-quality SolidSurface material for an unprecedented peace of mind, with realistic tile look and textured grout lines for a stunning look at a lower cost.
- Solid 1-piece wall panels designed to be cut-to-fit to ensure compatibility with all configurations, to be installed directly on drywall or over tile for maximum versatility.
- For added convenience built in a stylish storage solution, see MAAX Glass Shelves featured in the image carousel. Refer to part number: 10042818 Corner Shelf, 10042819 Rectangular Shelf.
- Compatible with most existing bathtub, shower bases and shower doors. Take a look at MAAX's vast product line for inspiration: https://www.homedepot.ca/search?q=maax#!q=maax

DENSO 36 IN. - TRADITIONAL SUBWAY - 107227

SKU	Color	Dimensions & Weight	MSRP
107227-000-270-000	White	36” x 1/4” x 84” / 80 lb	$ 1623

DENSO 42 IN. - TRADITIONAL SUBWAY - 107228

SKU	Color	Dimensions & Weight	MSRP
107228-000-270-000	White	42” x 1/4” x 84” / 93 lb	$ 1933

ACCESSORIES

SKU	Description	MSRP
10060311	Corner glass shelf (9 3/8 x 9 3/8 in.) (sold separately) 10 mm frosted glass with a clear band along the edge Compatible with Utile and tile shower walls	$ 174

RECOMMENDED DOORS - VISIT OUR WEBSITE FOR A COMPLETE LIST OF RECOMMENDED DOORS

SKU	Product Name	Pag.
137443	Radia Neo-round 32 x 32 x 71 ½ - 6mm	953
137447	Radia Square 32 x 32 x 71 ½ - 6mm	957
137444	Radia Neo-round 36 x 36 x 71 ½ - 6mm	953
137448	Radia Square 36 x 36 x 71 ½ - 6mm	957
137446	Radia Round 36 x 36 x 71 ½ - 6mm	955
137440	Radia Neo-angle 36 x 36 x 71 ½ - 6mm	951

Denso 50 in. Back Wall - Modern Subway

Material : SolidSurface

Features

- 50-inch wide shower or tub-shower backwall with a 6-inch by 24-inch horizontal Modern Subway Tile pattern in a beautiful matte white finish
- Pair with Denso 2-piece sidewalls kit in either 36-inch width (107223-000-270-000) or 42-inch width (107224-000-270-000) for either a corner or a alcove installation
- Composite walls made of durable high-quality SolidSurface material for an unprecedented peace of mind, with realistic tile look and textured grout lines for a stunning look at a lower cost.
- Solid 1-piece wall panels designed to be cut-to-fit to ensure compatibility with all configurations, to be installed directly on drywall or over tile for maximum versatility.
- For added convenience built in a stylish storage solution, see MAAX Glass Shelves featured in the image carousel. Refer to part number: 10042818 Corner Shelf, 10042819 Rectangular Shelf.
- Compatible with most existing bathtub, shower bases and shower doors. Take a look at MAAX's vast product line for inspiration: https://www.homedepot.ca/search?q=maax#!q=maax

DENSO 50 IN. BACK WALL - MODERN SUBWAY - 107226

SKU	Color	Dimensions & Weight	MSRP
107226-000-270-000	White	50” x 84” x 1/4” / 56 lb	$ 1896

DENSO 50 IN. BACK WALL - TRADITIONAL SUBWAY - 107230

SKU	Color	Dimensions & Weight	MSRP
107230-000-270-000	White	50” x 84” x 1/4” / 56 lb	$ 1896

ACCESSORIES

SKU	Description	MSRP
10060311	Corner glass shelf (9 3/8 x 9 3/8 in.) (sold separately) 10 mm frosted glass with a clear band along the edge Compatible with Utile and tile shower walls	$ 174

Go to Table of Contents

Denso 62 in. Back Wall - Modern Subway

Material : SolidSurface

Features

- Pair with Denso 2-piece sidewalls kit in either 36-inch width (107223-000-270-000) or 42-inch width (107224-000-270-000) for either a corner or a alcove installation
- Composite walls made of durable high-quality SolidSurface material for an unprecedented peace of mind, with realistic tile look and textured grout lines for a stunning look at a lower cost.
- Solid 1-piece wall panels designed to be cut-to-fit to ensure compatibility with all configurations, to be installed directly on drywall or over tile for maximum versatility.
- For added convenience built in a stylish storage solution, see MAAX Glass Shelves featured in the image carousel. Refer to part number: 10042818 Corner Shelf, 10042819 Rectangular Shelf.
- Compatible with most existing bathtub, shower bases and shower doors. Take a look at MAAX's vast product line for inspiration: https://www.homedepot.ca/search?q=maax#!q=maax

DENSO 62 IN. BACK WALL - MODERN SUBWAY - 107225

SKU	Color	Dimensions & Weight	MSRP
107225-000-270-000	White	62” x 84” x 1/4” / 69 lb	$ 2167

DENSO 62 IN. BACK WALL - TRADITIONAL SUBWAY - 107229

SKU	Color	Dimensions & Weight	MSRP
107229-000-270-000	White	62” x 84” x 1/4” / 69 lb	$ 2167

ACCESSORIES

SKU	Description	MSRP
10060311	Corner glass shelf (9 3/8 x 9 3/8 in.) (sold separately) 10 mm frosted glass with a clear band along the edge Compatible with Utile and tile shower walls	$ 174

NexTile 6030 Tub Wall Kit

Material : Composite

Features

- Subway tile design with realistic grout texture without the upkeep or high price tag
- 4-piece direct-to-stud design for easy handling and a quick, 1 person installation
- Spacious wall-to-wall storage niche with a beautiful accent mosaic tile pattern
- Compatible with most 60-inch x 30-inch bathtub
- Pair with one of these Maax tub for a hassle-free solution : New Town 60x30 IFS, Avenue 60x30, Nomad 60x30, Nomad 60x30 AFR, Bosca 60 x 30

NEXTILE 6030 TUB WALL KIT - 106542

SKU	Color	Dimensions & Weight	Packaging	MSRP
106542-000-270-000	White	60” x 30” x 60” / 96 lb	15.35 ft^3	$ 1659

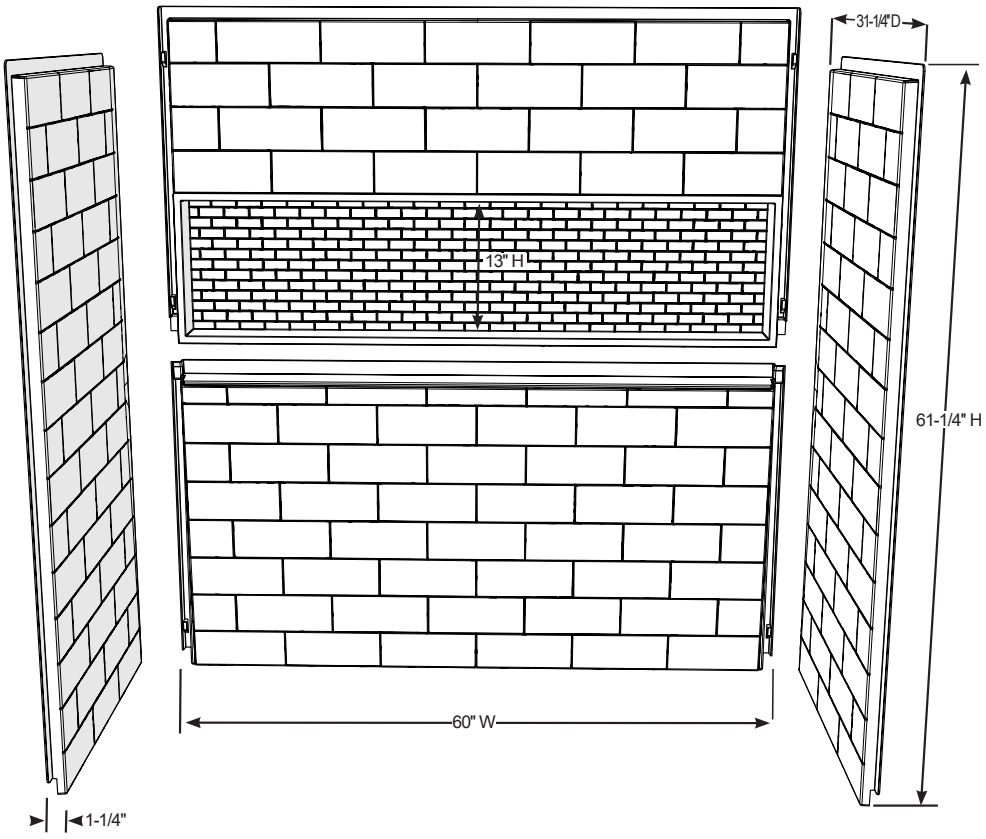
31-1/4"D
13" H
61-1/4" H
60" W
1-1/4"

Go to Table of Contents

NexTile 6032 Shower Wall Kit

Material : Composite

Features

- 4-piece compression molded composite with subway tile look, textured grout lines, and built-in storage niche
- Compatible with selected 60” x 32” shower bases
- Fast direct-to-stud installation
- Panels easily fit through existing doorways and can be installed by one person
- No surface coating to chip or crack - color runs throughout

NEXTILE 6032 SHOWER WALL KIT - 107352

SKU	Color	Dimensions & Weight	Packaging	MSRP
107352-000-270-000	White	60” x 32” x 74” / 115 lb	29.13 ft^3	$ 2450

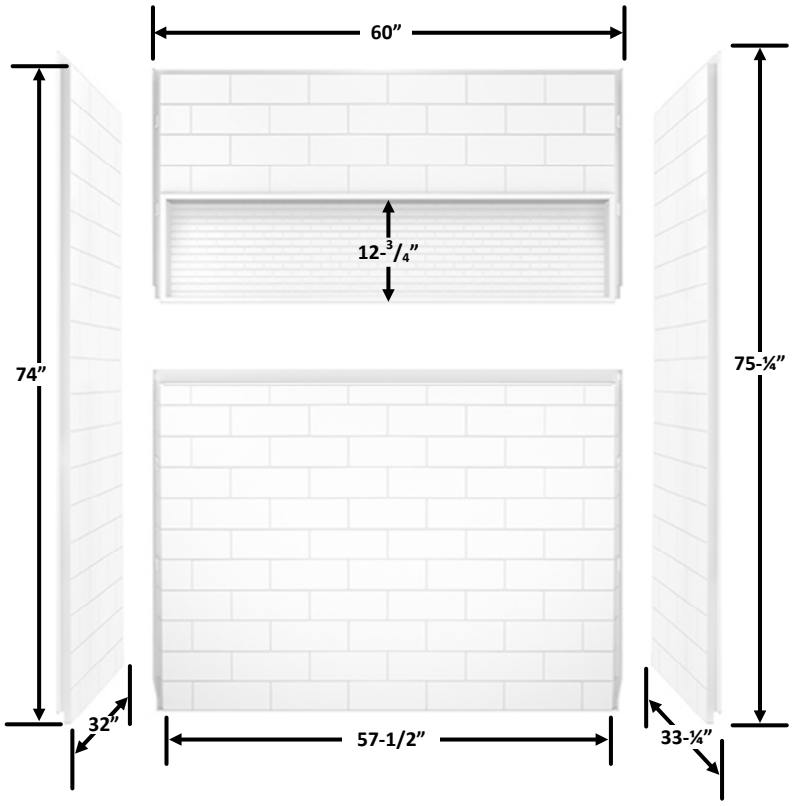

75

Material : Composite

Features

- Tub shower kit includes: 1 back wall, 2 side walls and one corner glass shelf
- 4 H x 12 L in. glossy subway tile
- Direct-to-stud installation
- Installs easily in just 1 day versus 3 days for standard ceramic tile
- Proudly made in North-America
- Featuring Evergrout™: the first realistic and textured grout lines with that won't crack or leak
- No tile or grout protective sealer required
- Solid, 1-piece wall panel: sturdy and durable allows for installation of grab bars and other accessories

UTILE 6032 TUB WALL KIT - 103408

SKU	Color	Dimensions & Weight	Packaging	MSRP
103408-301-019-000	Thunder Grey	60" x 32" x 60" / 145 lb	6.49 ft^3	$ 3184
103408-301-500-000	Soft Grey			$ 3184
103408-301-501-000	Ash Grey			$ 3184

ACCESSORIES

SKU	Description	MSRP
10029996-084	18 in. modern straight grab bar with flange (front installation) Specify colour: White **(002)**, Chrome **(084)**, Brushed Nickel **(105)**	$ 331
10029996-002		$ 331
10029996-105		$ 331
10030093-084	23 in. Curved left-hand grab bar with flange (front installation) Specify colour: White **(002)**, Chrome **(084)**, Brushed Nickel **(105)**	$ 536
10030093-002		$ 536
10030093-105		$ 536
10030094-084	23 in. Curved right-hand grab bar with flange (front installation) Specify colour: White **(002)**, Chrome **(084)**, Brushed Nickel **(105)**	$ 536
10030094-105		$ 536
10030094-002		$ 536
10029997-002	24 in. modern straight grab bar with flange (front installation) Specify color: White **(002)**, Chrome **(084)**, Brushed Nickel **(105)**	$ 378
10029997-105		$ 378
10029997-084		$ 378
10029998-084	30 in. modern straight grab bar with flange (front installation) Specify colour: White **(002)**, Chrome **(084)**, Brushed Nickel **(105)**	$ 403
10029998-002		$ 403
10029998-105		$ 403
10030095-002	32 in. curved left-hand grab bar with flange (front installation) Specify colour: White **(002)**, Chrome **(084)**, Brushed Nickel **(105)**	$ 581
10030095-084		$ 581
10030095-105		$ 581
10030097-084	32 in. curved right-hand grab bar with flange (front installation) Specify colour: White **(002)**, Chrome **(084)**, Brushed Nickel **(105)**	$ 581
10030097-002		$ 581
10030097-105		$ 581
10030100-002	37 in. modern curved left-hand grab bar with flange (front installation) Specify color: White **(002)**, Chrome **(084)**, Brushed Nickel **(105)**	$ 594
10030084-002	42 in. modern straight grab bar with flange (front installation) Specify color: White **(002)**, Chrome **(084)**	$ 469
10030086-002	48 in. modern straight grab bar with flange (front installation) Specify color: White **(002)**, Chrome **(084)**, Brushed Nickel **(105)**	$ 501
10030086-105		$ 501

ACCESSORIES

SKU	Description	MSRP
10030086-084	48 in. modern straight grab bar with flange (front installation) Specify color: White **(002)**, Chrome **(084)**, Brushed Nickel **(105)**	$ 501
10060311	Corner glass shelf (9 3/8 x 9 3/8 in.) (sold separately) 10 mm frosted glass with a clear band along the edge Compatible with Utile and tile shower walls	$ 174

Single Back Walls

Material : Composite

Features

- This back wall can be combined with two side walls to create an alcove shower installation or simply combined with a side wall for a corner shower installation
- Direct-to-stud installation
- Installs easily in just 1 day versus 3 days for standard ceramic tile
- Mistake-proof Ulok installation system allows you to perfectly align the panels, slip them together and lock them into place
- No tile or grout protective sealer required
- Solid, 1-piece wall panel: sturdy and durable allows for installation of grab bars and other accessories
- DIY installation, perfect for your home projects
- Proudly made in North America

UTILE 36 BACK WALL - 103416

SKU	Color	Dimensions & Weight	Packaging	MSRP
103416-301-526-000	Tux	35 1/4” x 80 1/8” x 1 1/8” / 41 lb	2.71 ft^3	$ 845
103416-304-516-000	Vapor			$ 900
103416-307-508-000	Carrara			$ 900
103416-312-504-000	Permafrost			$ 845
103416-312-505-000	Clay			$ 845
103416-312-507-000	Loam			$ 845
103416-314-527-000	Pearl			$ 900
103416-315-528-000	Chalk			$ 900
103416-316-529-000	Linen			$ 900
103416-317-522-000	Storm			$ 900

UTILE 48 BACK WALL - 103421

SKU	Color	Dimensions & Weight	Packaging	MSRP
103421-301-526-000	Tux	47 5/8” x 80 1/8” x 1 1/8” / 61 lb	3.6 ft^3	$ 1047
103421-304-516-000	Vapor			$ 1116
103421-305-517-000	Smoke			$ 1116
103421-306-512-000	Taupe			$ 1116
103421-306-513-000	Bora white			$ 1116
103421-306-514-000	Pebble Grey			$ 1116
103421-306-515-000	Charcoal			$ 1116
103421-307-508-000	Carrara			$ 1116
103421-312-504-000	Permafrost			$ 1047
103421-312-505-000	Clay			$ 1047
103421-312-507-000	Loam			$ 1047
103421-314-527-000	Pearl			$ 1116
103421-315-528-000	Chalk			$ 1116
103421-316-529-000	Linen			$ 1116
103421-317-522-000	Storm			$ 1116

Single Back Walls

Material : Composite

Features

- Combine with a two side walls for an alcove installation and one side wall for a corner installation
- Direct-to-stud installation
- Installs easily in just 1 day versus 3 days for standard ceramic tile
- Mistake-proof Ulok installation system allows you to perfectly align the panels, slip them together and lock them into place
- Featuring Evergrout™: the first realistic and textured grout lines with that won't crack or leak
- No tile or grout protective sealer required
- Solid, 1-piece wall panel: sturdy and durable allows for installation of grab bars and other accessories

UTILE 60 BACK WALL - 103412

SKU	Color	Dimensions & Weight	Packaging	MSRP
103412-300-502-000	Greige	60" x 80" x 1 1/8" / 96 lb	4.46 ft^3	$ 1673
103412-300-524-000	Arctik			$ 1673
103412-301-019-000	Thunder Grey			$ 1673
103412-301-500-000	Soft Grey			$ 1673
103412-301-501-000	Ash Grey			$ 1673
103412-302-503-000	Sahara			$ 1673

ACCESSORIES

SKU	Description	MSRP
10060311	Corner glass shelf (9 3/8 x 9 3/8 in.) (sold separately) 10 mm frosted glass with a clear band along the edge Compatible with Utile and tile shower walls	$ 174
10060315	10 Corner glass shelf (9 3/8 X 9 3/8 in) 10 mm frosted glass with a clear band along the edge	$ 1643

Go to Table of Contents

BACK WALL

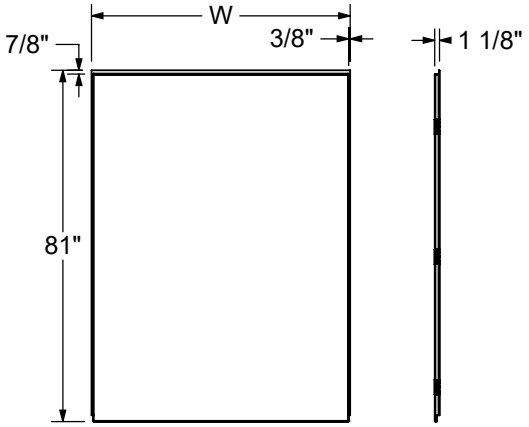

Code	Description	W (in.)
103411	Utile 48 in. back wall	47 5/8
103412	Utile 60 in. back wall	59 5/8

SIDE WALL

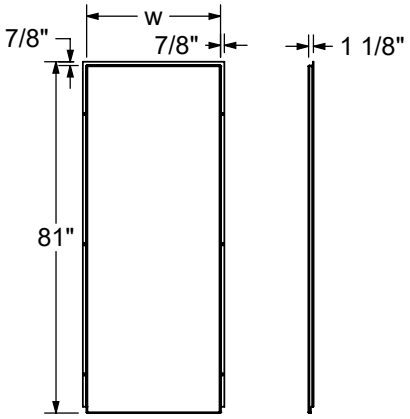

Code	Description	W (in.)
103409	Utile 32 in. side wall	32 1/2

TOP VIEW (ASSEMBLED)

Configuration	W (in.)	L alcove (in.)	L corner (in.)	D (in.)	d (in.)
Utile 4832	47 3/4	45 1/2	46 1/4	32 3/4	30 3/4
Utile 6032	59 3/4	57 1/2	58 1/8	32 3/4	30 3/4

ALCOVE

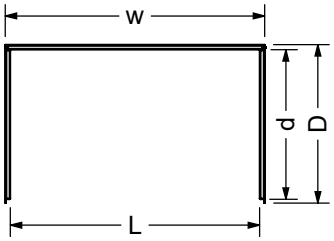

CORNER

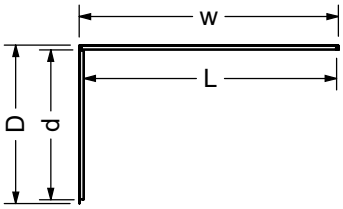

This product is designed to be installed in a building that conforms with the requirements of the National Building Code of Canada 2005

All dimensions are approximate. Structure measurements must be verified against the unit to ensure proper fit.

Single Back Walls

Material : Composite

Features

- This back wall can be combined with two side walls to create an alcove shower installation or simply combined with a side wall for a corner shower installation
- Direct-to-stud installation
- Installs easily in just 1 day versus 3 days for standard ceramic tile
- Mistake-proof Ulok installation system allows you to perfectly align the panels, slip them together and lock them into place
- No tile or grout protective sealer required
- Solid, 1-piece wall panel: sturdy and durable allows for installation of grab bars and other accessories
- DIY installation, perfect for your home projects
- Proudly made in North America

UTILE 60 BACK WALL - 103422

SKU	Color	Dimensions & Weight	Packaging	MSRP
103422-301-526-000	Tux	59 5/8” x 80 1/8” x 1 1/8” / 71 lb	4.47 ft³	$ 1247
103422-304-516-000	Vapor			$ 1327
103422-305-517-000	Smoke			$ 1327
103422-306-512-000	Taupe			$ 1327
103422-306-513-000	Bora white			$ 1327
103422-306-514-000	Pebble Grey			$ 1327
103422-306-515-000	Charcoal			$ 1327
103422-307-508-000	Carrara			$ 1327
103422-312-504-000	Permafrost			$ 1247
103422-312-505-000	Clay			$ 1247
103422-312-507-000	Loam			$ 1247
103422-314-527-000	Pearl			$ 1327
103422-315-528-000	Chalk			$ 1327
103422-316-529-000	Linen			$ 1327
103422-317-522-000	Storm			$ 1327

ACCESSORIES

SKU	Description	MSRP
10030084-002	42 in. modern straight grab bar with flange (front installation) Specify color: White **(002)**, Chrome **(084)**	$ 469
10030094-084	23 in. Curved right-hand grab bar with flange (front installation) Specify colour: White **(002)**, Chrome **(084)**, Brushed Nickel **(105)**	$ 536
10030094-105		$ 536
10030094-002		$ 536
10030095-002	32 in. curved left-hand grab bar with flange (front installation) Specify colour: White **(002)**, Chrome **(084)**, Brushed Nickel **(105)**	$ 581
10030095-084		$ 581
10030095-105		$ 581
10030097-084	32 in. curved right-hand grab bar with flange (front installation) Specify colour: White **(002)**, Chrome **(084)**, Brushed Nickel **(105)**	$ 581
10030097-002		$ 581
10030097-105		$ 581
10030100-002	37 in. modern curved left-hand grab bar with flange (front installation) Specify color: White **(002)**, Chrome **(084)**, Brushed Nickel **(105)**	$ 594
10030101-002	37 in. modern curved right-hand grab bar with flange (front installation) Specify color: White **(002)**, Chrome **(084)**, Brushed Nickel **(105)**	$ 594

ACCESSORIES

SKU	Description	MSRP
10030101-105	37 in. modern curved right-hand grab bar with flange (front installation) Specify color: White **(002)**, Chrome **(084)**, Brushed Nickel **(105)**	$ 594
10060311	Corner glass shelf (9 3/8 x 9 3/8 in.) (sold separately) 10 mm frosted glass with a clear band along the edge Compatible with Utile and tile shower walls	$ 174
10060315	10 Corner glass shelf (9 3/8 X 9 3/8 in) 10 mm frosted glass with a clear band along the edge	$ 1643
10029996-084	18 in. modern straight grab bar with flange (front installation) Specify colour: White **(002)**, Chrome **(084)**, Brushed Nickel **(105)**	$ 331
10029996-002		$ 331
10029996-105		$ 331
10029997-002	24 in. modern straight grab bar with flange (front installation) Specify color: White **(002)**, Chrome **(084)**, Brushed Nickel **(105)**	$ 378
10029997-105		$ 378
10029997-084		$ 378
10029998-084	30 in. modern straight grab bar with flange (front installation) Specify colour: White **(002)**, Chrome **(084)**, Brushed Nickel **(105)**	$ 403
10029998-002		$ 403
10029998-105		$ 403
10029999-105	36 in. modern straight grab bar with flange (front installation) Specify colour: White **(002)**, Chrome **(084)**, Brushed Nickel **(105)**	$ 427
10029999-002		$ 427
10029999-084		$ 427
10030086-002	48 in. modern straight grab bar with flange (front installation) Specify color: White **(002)**, Chrome **(084)**, Brushed Nickel **(105)**	$ 501
10030086-105		$ 501
10030086-084		$ 501
10030093-084	23 in. Curved left-hand grab bar with flange (front installation) Specify colour: White **(002)**, Chrome **(084)**, Brushed Nickel **(105)**	$ 536
10030093-002		$ 536
10030093-105		$ 536

BACK WALL

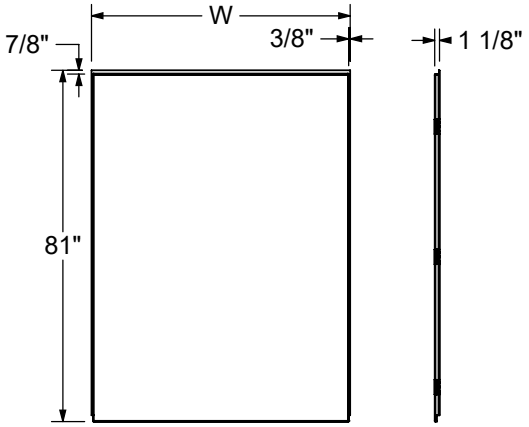

Code	Description	W (in.)
103416	Utile 36 in. back wall	35 1/4
103421	Utile 48 in. Back wall	47 5/8
103422	Utile 60 in. Back wall	59 5/8

SIDE WALL

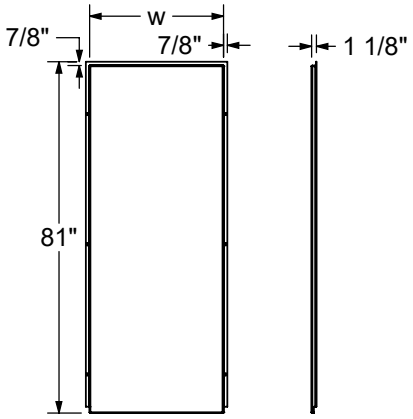

Code	Description	W (in.)
103419	Utile32 in. side wall	32 1/2
103415	Utile 36 in. side wall	36 1/4

TOP VIEW (ASSEMBLED)

Configuration	W (in.)	L alcove (in.)	L corner (in.)	D (in.)	d (in.)
Utile 3636	35 7/8	33 1/2	N/A	36 1/2	34 1/2
Utile 4832	47 3/4	45 1/2	46 1/4	32 3/4	30 3/4
Utile 4836	47 3/4	45 1/2	46 1/4	36 1/2	34 1/2
Utile 6032	59 3/4	57 1/2	58 1/8	32 3/4	30 3/4
Utile 6036	59 3/4	57 1/2	58 1/8	36 1/2	34 1/2

ALCOVE

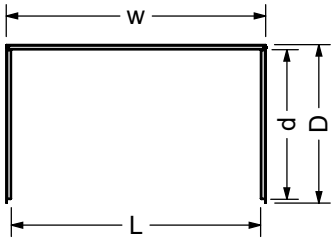

CORNER

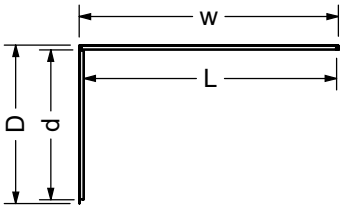

This product is designed to be installed in a building that conforms with the requirements of the National Building Code of Canada 2005

All dimensions are approximate. Structure measurements must be verified against the unit to ensure proper fit.

Single Side Walls

Material : Composite

Features

- This side wall can be combined with a back wall and another side wall to create an alcove shower installation or simply combined with a back wall for a corner shower installation
- Direct-to-stud installation
- Installs easily in just 1 day versus 3 days for standard ceramic tile
- Mistake-proof Ulok installation system allows you to perfectly align the panels, slip them together and lock them into place
- No tile or grout protective sealer required
- Solid, 1-piece wall panel: sturdy and durable allows for installation of grab bars and other accessories
- DIY installation, perfect for your home projects
- Proudly made in North America

UTILE 36 SIDE WALL - 103415

SKU	Color	Dimensions & Weight	Packaging	MSRP
103415-301-526-000	Tux	36 1/4” x 80 1/8” x 1 1/8” / 41 lb	2.71 ft³	$ 704
103415-304-516-000	Vapor			$ 749
103415-305-517-000	Smoke			$ 749
103415-306-512-000	Taupe			$ 749
103415-306-513-000	Bora white			$ 749
103415-306-514-000	Pebble Grey			$ 749
103415-306-515-000	Charcoal			$ 749
103415-307-508-000	Carrara			$ 749
103415-312-504-000	Permafrost			$ 704
103415-312-505-000	Clay			$ 704
103415-312-507-000	Loam			$ 704
103415-314-527-000	Pearl			$ 749
103415-315-528-000	Chalk			$ 749
103415-316-529-000	Linen			$ 749
103415-317-522-000	Storm			$ 749

UTILE 32 SIDE WALL - 103419

SKU	Color	Dimensions & Weight	Packaging	MSRP
103419-301-526-000	Tux	32 1/2” x 80 1/8” x 1 1/8” / 38 lb	2.46 ft³	$ 625
103419-304-516-000	Vapor			$ 666
103419-305-517-000	Smoke			$ 666
103419-306-512-000	Taupe			$ 666
103419-306-513-000	Bora white			$ 666
103419-306-514-000	Pebble Grey			$ 666
103419-306-515-000	Charcoal			$ 666
103419-307-508-000	Carrara			$ 666
103419-312-504-000	Permafrost			$ 625
103419-312-505-000	Clay			$ 625
103419-312-507-000	Loam			$ 625
103419-314-527-000	Pearl			$ 666
103419-315-528-000	Chalk			$ 666
103419-316-529-000	Linen			$ 666

UTILE 32 SIDE WALL - 103419

SKU	Color	Dimensions & Weight	Packaging	MSRP
103419-317-522-000	Storm	32 1/2” x 80 1/8” x 1 1/8” / 38 lb	2.46 ft^3	$ 666

BACK WALL

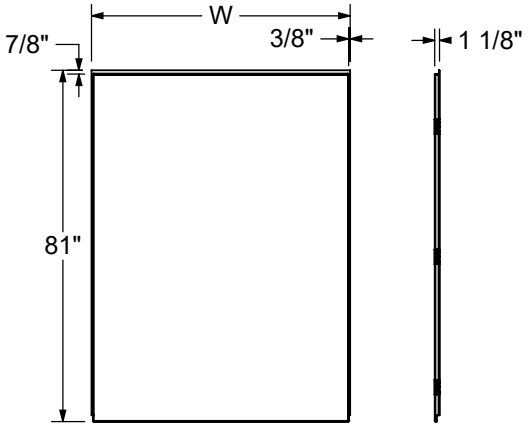

Code	Description	W (in.)
103416	Utile 36 in. back wall	35 1/4
103421	Utile 48 in. Back wall	47 5/8
103422	Utile 60 in. Back wall	59 5/8

SIDE WALL

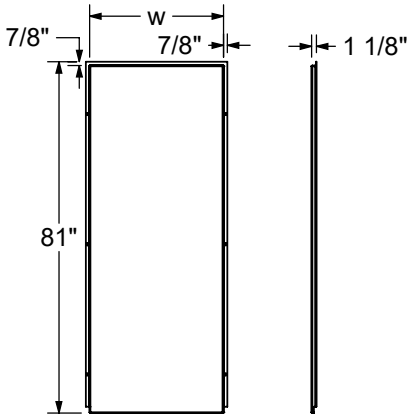

Code	Description	W (in.)
103419	Utile32 in. side wall	32 1/2
103415	Utile 36 in. side wall	36 1/4

TOP VIEW (ASSEMBLED)

Configuration	W (in.)	L alcove (in.)	L corner (in.)	D (in.)	d (in.)
Utile 3636	35 7/8	33 1/2	N/A	36 1/2	34 1/2
Utile 4832	47 3/4	45 1/2	46 1/4	32 3/4	30 3/4
Utile 4836	47 3/4	45 1/2	46 1/4	36 1/2	34 1/2
Utile 6032	59 3/4	57 1/2	58 1/8	32 3/4	30 3/4
Utile 6036	59 3/4	57 1/2	58 1/8	36 1/2	34 1/2

ALCOVE

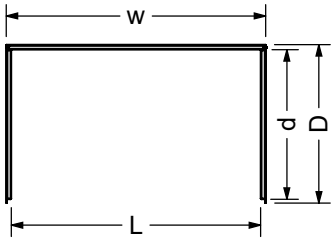

CORNER

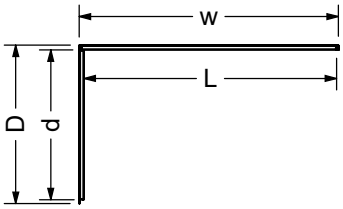

This product is designed to be installed in a building that conforms with the requirements of the National Building Code of Canada 2005

All dimensions are approximate. Structure measurements must be verified against the unit to ensure proper fit.

Wall Kits - Alcove Shower

Material : Composite

Features

- Shower wall kit includes: 1 back wall, 2 side walls and 1 corner glass shelf for an alcove installation
- Direct-to-stud installation
- Installs easily in just 1 day versus 3 days for standard ceramic tile
- Mistake-proof Ulok installation system allows you to perfectly align the panels, slip them together and lock them into place
- No tile or grout protective sealer required
- Solid, 1-piece wall panels: sturdy and durable allows for installation of grab bars and other accessories
- DIY installation, perfect for your home projects
- Proudly made in North America

UTILE 4832 SHOWER WALL KIT - 107459

SKU	Color	Dimensions & Weight	Packaging	MSRP
107459-301-526-000	Tux	47 3/4” x 31 7/8” x 80 1/8” / 137 lb	10.8 ft³	$ 2295
107459-304-516-000	Vapor			$ 2448
107459-305-517-000	Smoke			$ 2448
107459-306-512-000	Taupe			$ 2448
107459-306-513-000	Bora white			$ 2448
107459-306-514-000	Pebble Grey			$ 2448
107459-306-515-000	Charcoal			$ 2448
107459-307-508-000	Carrara			$ 2448
107459-312-504-000	Permafrost			$ 2295
107459-312-505-000	Clay			$ 2295
107459-312-507-000	Loam			$ 2295
107459-314-527-000	Pearl			$ 2448
107459-315-528-000	Chalk			$ 2448
107459-316-529-000	Linen			$ 2448
107459-317-522-000	Storm			$ 2448

UTILE 4836 SHOWER WALL KIT - 107460

SKU	Color	Dimensions & Weight	Packaging	MSRP
107460-301-526-000	Tux	47 3/4” x 35 5/8” x 80 1/8” / 143 lb	10.8 ft³	$ 2453
107460-304-516-000	Vapor			$ 2614
107460-305-517-000	Smoke			$ 2614
107460-306-512-000	Taupe			$ 2614
107460-306-513-000	Bora white			$ 2614
107460-306-514-000	Pebble Grey			$ 2614
107460-306-515-000	Charcoal			$ 2614
107460-307-508-000	Carrara			$ 2614
107460-312-504-000	Permafrost			$ 2453
107460-312-505-000	Clay			$ 2453
107460-312-507-000	Loam			$ 2453
107460-314-527-000	Pearl			$ 2614
107460-315-528-000	Chalk			$ 2614
107460-316-529-000	Linen			$ 2614
107460-317-522-000	Storm			$ 2614

UTILE 6032 SHOWER WALL KIT - 107463

SKU	Color	Dimensions & Weight	Packaging	MSRP
107463-301-526-000	Tux	59 3/4” x 31 7/8” x 80 1/8” / 147 lb	13.39 ft^3	$ 2496
107463-304-516-000	Vapor			$ 2658
107463-305-517-000	Smoke			$ 2658
107463-306-512-000	Taupe			$ 2658
107463-306-513-000	Bora white			$ 2658
107463-306-514-000	Pebble Grey			$ 2658
107463-306-515-000	Charcoal			$ 2658
107463-307-508-000	Carrara			$ 2658
107463-312-504-000	Permafrost			$ 2496
107463-312-505-000	Clay			$ 2496
107463-312-507-000	Loam			$ 2496
107463-314-527-000	Pearl			$ 2658
107463-315-528-000	Chalk			$ 2658
107463-316-529-000	Linen			$ 2658
107463-317-522-000	Storm			$ 2658

UTILE 6036 SHOWER WALL KIT - 107464

SKU	Color	Dimensions & Weight	Packaging	MSRP
107464-301-526-000	Tux	59 3/4” x 35 5/8” x 80 1/8” / 153 lb	13.39 ft^3	$ 2653
107464-304-516-000	Vapor			$ 2824
107464-305-517-000	Smoke			$ 2824
107464-306-512-000	Taupe			$ 2824
107464-306-513-000	Bora white			$ 2824
107464-306-514-000	Pebble Grey			$ 2824
107464-306-515-000	Charcoal			$ 2824
107464-307-508-000	Carrara			$ 2824
107464-312-504-000	Permafrost			$ 2653
107464-312-505-000	Clay			$ 2653
107464-312-507-000	Loam			$ 2653
107464-314-527-000	Pearl			$ 2824
107464-315-528-000	Chalk			$ 2824
107464-316-529-000	Linen			$ 2824
107464-317-522-000	Storm			$ 2824

UTILE 3636 SHOWER WALL KIT - 107479

SKU	Color	Dimensions & Weight	Packaging	MSRP
107479-301-526-000	Tux	35 7/8” x 35 5/8” x 80 1/8” / 123 lb	8.11 ft^3	$ 2251
107479-304-516-000	Vapor			$ 2397
107479-307-508-000	Carrara			$ 2397
107479-312-504-000	Permafrost			$ 2251
107479-312-505-000	Clay			$ 2251
107479-312-507-000	Loam			$ 2251
107479-314-527-000	Pearl			$ 2397
107479-315-528-000	Chalk			$ 2397
107479-316-529-000	Linen			$ 2397
107479-317-522-000	Storm			$ 2397

ACCESSORIES

SKU	Description	MSRP
10029996-084	18 in. modern straight grab bar with flange (front installation) Specify colour: White **(002)**, Chrome **(084)**, Brushed Nickel **(105)**	$ 331
10029996-002		$ 331
10029996-105		$ 331
10030093-084	23 in. Curved left-hand grab bar with flange (front installation) Specify colour: White **(002)**, Chrome **(084)**, Brushed Nickel **(105)**	$ 536
10030093-002		$ 536
10030093-105		$ 536

ACCESSORIES

SKU	Description	MSRP
10030094-084	23 in. Curved right-hand grab bar with flange (front installation) Specify colour: White **(002)**, Chrome **(084)**, Brushed Nickel **(105)**	$ 536
10030094-105		$ 536
10030094-002		$ 536
10029997-002	24 in. modern straight grab bar with flange (front installation) Specify color: White **(002)**, Chrome **(084)**, Brushed Nickel **(105)**	$ 378
10029997-105		$ 378
10029997-084		$ 378
10029998-084	30 in. modern straight grab bar with flange (front installation) Specify colour: White **(002)**, Chrome **(084)**, Brushed Nickel **(105)**	$ 403
10029998-002		$ 403
10029998-105		$ 403
10030095-002	32 in. curved left-hand grab bar with flange (front installation) Specify colour: White **(002)**, Chrome **(084)**, Brushed Nickel **(105)**	$ 581
10030095-084		$ 581
10030095-105		$ 581
10030097-084	32 in. curved right-hand grab bar with flange (front installation) Specify colour: White **(002)**, Chrome **(084)**, Brushed Nickel **(105)**	$ 581
10030097-002		$ 581
10030097-105		$ 581
10029999-105	36 in. modern straight grab bar with flange (front installation) Specify colour: White **(002)**, Chrome **(084)**, Brushed Nickel **(105)**	$ 427
10029999-002		$ 427
10029999-084		$ 427
10030100-002	37 in. modern curved left-hand grab bar with flange (front installation) Specify color: White **(002)**, Chrome **(084)**, Brushed Nickel **(105)**	$ 594
10030101-002	37 in. modern curved right-hand grab bar with flange (front installation) Specify color: White **(002)**, Chrome **(084)**, Brushed Nickel **(105)**	$ 594
10030101-105		$ 594
10030084-002	42 in. modern straight grab bar with flange (front installation) Specify color: White **(002)**, Chrome **(084)**	$ 469
10030086-002	48 in. modern straight grab bar with flange (front installation) Specify color: White **(002)**, Chrome **(084)**, Brushed Nickel **(105)**	$ 501
10030086-105		$ 501
10030086-084		$ 501
10060311	Corner glass shelf (9 3/8 x 9 3/8 in.) (sold separately) 10 mm frosted glass with a clear band along the edge Compatible with Utile and tile shower walls	$ 174

BACK WALL

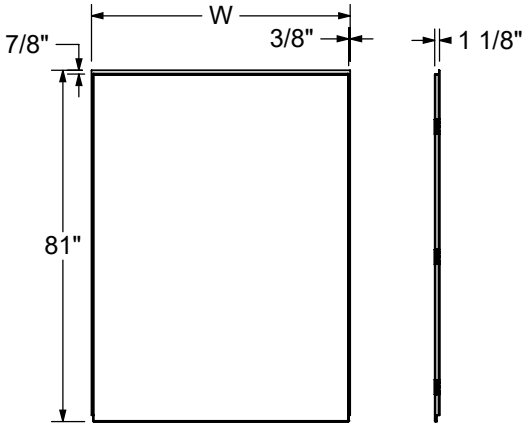

Code	Description	W (in.)
103416	Utile 36 in. back wall	35 1/4
103421	Utile 48 in. Back wall	47 5/8
103422	Utile 60 in. Back wall	59 5/8

SIDE WALL

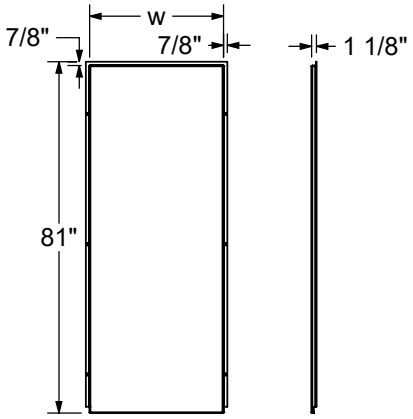

Code	Description	W (in.)
103419	Utile32 in. side wall	32 1/2
103415	Utile 36 in. side wall	36 1/4

TOP VIEW (ASSEMBLED)

Configuration	W (in.)	L alcove (in.)	L corner (in.)	D (in.)	d (in.)
Utile 3636	35 7/8	33 1/2	N/A	36 1/2	34 1/2
Utile 4832	47 3/4	45 1/2	46 1/4	32 3/4	30 3/4
Utile 4836	47 3/4	45 1/2	46 1/4	36 1/2	34 1/2
Utile 6032	59 3/4	57 1/2	58 1/8	32 3/4	30 3/4
Utile 6036	59 3/4	57 1/2	58 1/8	36 1/2	34 1/2

ALCOVE

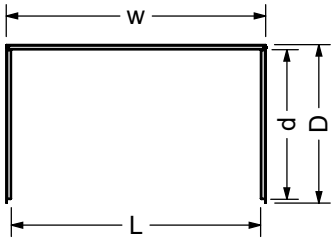

CORNER

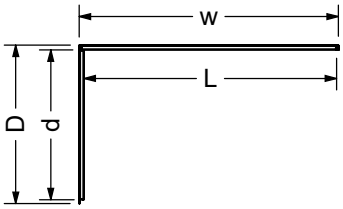

This product is designed to be installed in a building that conforms with the requirements of the National Building Code of Canada 2005

All dimensions are approximate. Structure measurements must be verified against the unit to ensure proper fit.

Wall Kits - Corner Shower

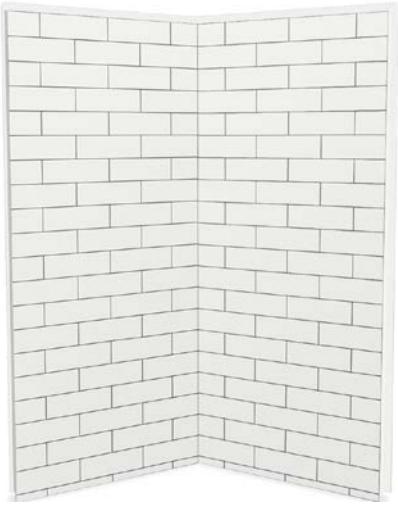

Material : Composite

Features

- Shower wall kit includes: 1 side wall, 1 back wall and 1 corner glass shelf for a corner installation
- Direct-to-stud installation
- Installs easily in just 1 day versus 3 days for standard ceramic tile
- Mistake-proof positionning strip allows you to position the panels into place and perfectly align them in the corner
- No tile or grout protective sealer required
- Solid, 1-piece wall panels: sturdy and durable allows for installation of grab bars and other accessories
- DIY installation, perfect for your home projects
- Proudly made in North America

UTILE 3636 SHOWER WALL KIT - 103388

SKU	Color	Dimensions & Weight	Packaging	MSRP
103388-301-526-000	Tux	35 1/4” x 35 5/8” x 80 1/8” / 90 lb	4.96 ft^3	$ 1407
103388-304-516-000	Vapor			$ 1498
103388-307-508-000	Carrara			$ 1498
103388-312-504-000	Permafrost			$ 1407
103388-312-505-000	Clay			$ 1407
103388-312-507-000	Loam			$ 1407
103388-314-527-000	Pearl			$ 1498
103388-315-528-000	Chalk			$ 1498
103388-316-529-000	Linen			$ 1498
103388-317-522-000	Storm			$ 1498

UTILE 4832 SHOWER WALL KIT - 107461

SKU	Color	Dimensions & Weight	Packaging	MSRP
107461-301-526-000	Tux	47 3/8” x 31 7/8” x 80 1/8” / 99 lb	7.2 ft^3	$ 1671
107461-304-516-000	Vapor			$ 1782
107461-305-517-000	Smoke			$ 1782
107461-306-512-000	Taupe			$ 1782
107461-306-513-000	Bora white			$ 1782
107461-306-514-000	Pebble Grey			$ 1782
107461-306-515-000	Charcoal			$ 1782
107461-307-508-000	Carrara			$ 1782
107461-312-504-000	Permafrost			$ 1671
107461-312-505-000	Clay			$ 1671
107461-312-507-000	Loam			$ 1671
107461-314-527-000	Pearl			$ 1782
107461-315-528-000	Chalk			$ 1782
107461-316-529-000	Linen			$ 1782
107461-317-522-000	Storm			$ 1782

UTILE 4836 SHOWER WALL KIT - 107462

SKU	Color	Dimensions & Weight	Packaging	MSRP
107462-301-526-000	Tux	47 3/8” x 35 5/8” x 80 1/8” / 102 lb	7.2 ft^3	$ 1750
107462-304-516-000	Vapor			$ 1865
107462-305-517-000	Smoke			$ 1865

UTILE 4836 SHOWER WALL KIT - 107462

SKU	Color	Dimensions & Weight	Packaging	MSRP
107462-306-512-000	Taupe	47 3/8” x 35 5/8” x 80 1/8” / 102 lb	7.2 ft³	$ 1865
107462-306-513-000	Bora white			$ 1865
107462-306-514-000	Pebble Grey			$ 1865
107462-306-515-000	Charcoal			$ 1865
107462-307-508-000	Carrara			$ 1865
107462-312-504-000	Permafrost			$ 1750
107462-312-505-000	Clay			$ 1750
107462-312-507-000	Loam			$ 1750
107462-314-527-000	Pearl			$ 1865
107462-315-528-000	Chalk			$ 1865
107462-316-529-000	Linen			$ 1865
107462-317-522-000	Storm			$ 1865

UTILE 6032 SHOWER WALL KIT - 107465

SKU	Color	Dimensions & Weight	Packaging	MSRP
107465-301-526-000	Tux	59 3/8” x 31 7/8” x 80 1/8” / 109 lb	8.93 ft³	$ 1871
107465-304-516-000	Vapor			$ 1993
107465-305-517-000	Smoke			$ 1993
107465-306-512-000	Taupe			$ 1993
107465-306-513-000	Bora white			$ 1993
107465-306-514-000	Pebble Grey			$ 1993
107465-306-515-000	Charcoal			$ 1993
107465-307-508-000	Carrara			$ 1993
107465-312-504-000	Permafrost			$ 1871
107465-312-505-000	Clay			$ 1871
107465-312-507-000	Loam			$ 1871
107465-314-527-000	Pearl			$ 1993
107465-315-528-000	Chalk			$ 1993
107465-316-529-000	Linen			$ 1993
107465-317-522-000	Storm			$ 1993

UTILE 6036 SHOWER WALL KIT - 107466

SKU	Color	Dimensions & Weight	Packaging	MSRP
107466-301-526-000	Tux	59 3/8” x 35 5/8” x 80 1/8” / 112 lb	8.93 ft³	$ 1950
107466-304-516-000	Vapor			$ 2076
107466-305-517-000	Smoke			$ 2076
107466-306-512-000	Taupe			$ 2076
107466-306-513-000	Bora white			$ 2076
107466-306-514-000	Pebble Grey			$ 2076
107466-306-515-000	Charcoal			$ 2076
107466-307-508-000	Carrara			$ 2076
107466-312-504-000	Permafrost			$ 1950
107466-312-505-000	Clay			$ 1950
107466-312-507-000	Loam			$ 1950
107466-314-527-000	Pearl			$ 2076
107466-315-528-000	Chalk			$ 2076
107466-316-529-000	Linen			$ 2076
107466-317-522-000	Storm			$ 2076

ACCESSORIES

SKU	Description	MSRP
10029996-084	18 in. modern straight grab bar with flange (front installation) Specify colour: White **(002)**, Chrome **(084)**, Brushed Nickel **(105)**	$ 331

ACCESSORIES

SKU	Description	MSRP
10029996-002	18 in. modern straight grab bar with flange (front installation) Specify colour: White **(002)**, Chrome **(084)**, Brushed Nickel **(105)**	$ 331
10029996-105		$ 331
10030093-084	23 in. Curved left-hand grab bar with flange (front installation) Specify colour: White **(002)**, Chrome **(084)**, Brushed Nickel **(105)**	$ 536
10030093-002		$ 536
10030093-105		$ 536
10030094-084	23 in. Curved right-hand grab bar with flange (front installation) Specify colour: White **(002)**, Chrome **(084)**, Brushed Nickel **(105)**	$ 536
10030094-105		$ 536
10030094-002		$ 536
10029997-002	24 in. modern straight grab bar with flange (front installation) Specify color: White **(002)**, Chrome **(084)**, Brushed Nickel **(105)**	$ 378
10029997-105		$ 378
10029997-084		$ 378
10029998-084	30 in. modern straight grab bar with flange (front installation) Specify colour: White **(002)**, Chrome **(084)**, Brushed Nickel **(105)**	$ 403
10029998-002		$ 403
10029998-105		$ 403
10030095-002	32 in. curved left-hand grab bar with flange (front installation) Specify colour: White **(002)**, Chrome **(084)**, Brushed Nickel **(105)**	$ 581
10030095-084		$ 581
10030095-105		$ 581
10030097-084	32 in. curved right-hand grab bar with flange (front installation) Specify colour: White **(002)**, Chrome **(084)**, Brushed Nickel **(105)**	$ 581
10030097-002		$ 581
10030097-105		$ 581
10029999-105	36 in. modern straight grab bar with flange (front installation) Specify colour: White **(002)**, Chrome **(084)**, Brushed Nickel **(105)**	$ 427
10029999-002		$ 427
10029999-084		$ 427
10030084-002	42 in. modern straight grab bar with flange (front installation) Specify color: White (**002**), Chrome (**084**)	$ 469
10030086-002	48 in. modern straight grab bar with flange (front installation) Specify color: White **(002)**, Chrome **(084)**, Brushed Nickel **(105)**	$ 501
10030086-105		$ 501
10030086-084		$ 501
10060311	Corner glass shelf (9 3/8 x 9 3/8 in.) (sold separately) 10 mm frosted glass with a clear band along the edge Compatible with Utile and tile shower walls	$ 174

RECOMMENDED DOORS - VISIT OUR WEBSITE FOR A COMPLETE LIST OF RECOMMENDED DOORS

SKU	Product Name	Pag.
137444	Radia Neo-round 36 x 36 x 71 ½ - 6mm	953
137448	Radia Square 36 x 36 x 71 ½ - 6mm	957
137446	Radia Round 36 x 36 x 71 ½ - 6mm	955
137440	Radia Neo-angle 36 x 36 x 71 ½ - 6mm	951

Go to Table of Contents

WALL B

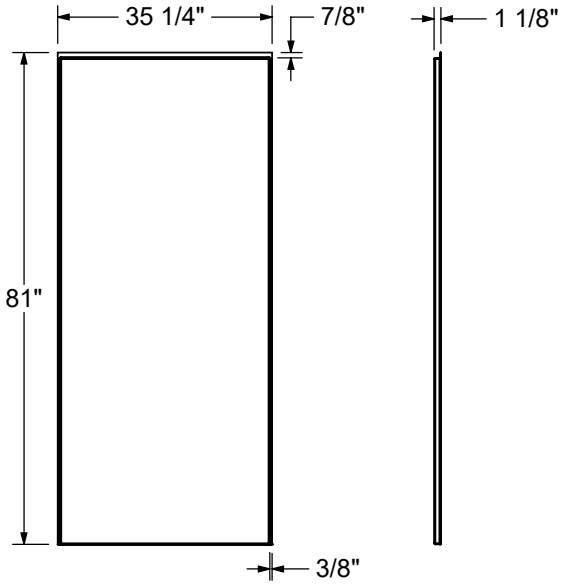

WALL S

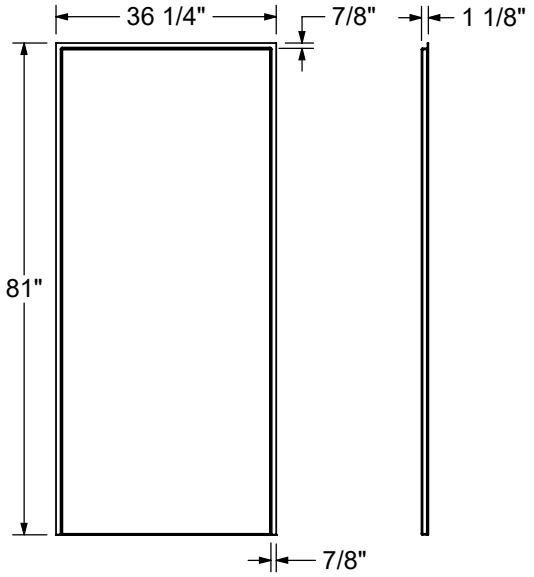

TOP VIEW (ASSEMBLED)

CORNER LEFT

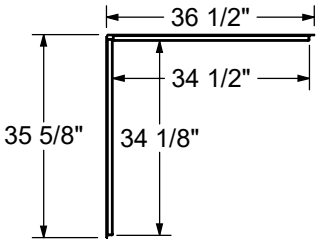

CORNER RIGHT

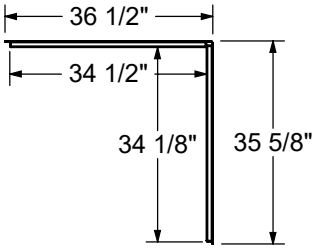

This product is designed to be installed in a building that conforms with the requirements of the National Building Code of Canada 2005

All dimensions are approximate. Structure measurements must be verified against the unit to ensure proper fit.

Wall Kits - Tub

Material : Composite

Features

- Tub wall kit includes: 1 back wall, 2 side walls and 1 corner glass shelf for an alcove installation
- Direct-to-stud installation
- Installs easily in just 1 day versus 3 days for standard ceramic tile
- Mistake-proof Ulok installation system allows you to perfectly align the panels, slip them together and lock them into place
- No tile or grout protective sealer required
- Solid, 1-piece wall panels: sturdy and durable allows for installation of grab bars and other accessories
- DIY installation, perfect for your home projects
- Proudly made in North America

UTILE 6032 TUB WALL KIT - 103418

SKU	Color	Dimensions & Weight	Packaging	MSRP
103418-301-526-000	Tux	59 7/8” x 32” x 60” / 130 lb	6.5 ft³	$ 2050
103418-307-508-000	Carrara			$ 2624
103418-312-504-000	Permafrost			$ 2050
103418-312-505-000	Clay			$ 2050
103418-312-507-000	Loam			$ 2050
103418-314-527-000	Pearl			$ 2184
103418-315-528-000	Chalk			$ 2184
103418-316-529-000	Linen			$ 2184
103418-317-522-000	Storm			$ 2184

UTILE 6030 TUB WALL KIT - 103424

SKU	Color	Dimensions & Weight	Packaging	MSRP
103424-301-526-000	Tux	59 7/8” x 29 7/8” x 60” / 129 lb	6.23 ft³	$ 1865
103424-307-508-000	Carrara			$ 1985
103424-312-504-000	Permafrost			$ 1865
103424-312-505-000	Clay			$ 1865
103424-312-507-000	Loam			$ 1865
103424-314-527-000	Pearl			$ 1985
103424-315-528-000	Chalk			$ 1985
103424-316-529-000	Linen			$ 1985
103424-317-522-000	Storm			$ 1985

ACCESSORIES

SKU	Description	MSRP
10030084-002	42 in. modern straight grab bar with flange (front installation) Specify color: White (**002**), Chrome (**084**)	$ 469
10030094-084	23 in. Curved right-hand grab bar with flange (front installation) Specify colour: White **(002)**, Chrome **(084)**, Brushed Nickel **(105)**	$ 536
10030094-105		$ 536
10030094-002		$ 536
10030095-002	32 in. curved left-hand grab bar with flange (front installation) Specify colour: White **(002)**, Chrome **(084)**, Brushed Nickel **(105)**	$ 581
10030095-084		$ 581
10030095-105		$ 581
10030097-084	32 in. curved right-hand grab bar with flange (front installation) Specify colour: White **(002)**, Chrome **(084)**, Brushed Nickel **(105)**	$ 581

ACCESSORIES

SKU	Description	MSRP
10030097-002	32 in. curved right-hand grab bar with flange (front installation) Specify colour: White **(002)**, Chrome **(084)**, Brushed Nickel **(105)**	$ 581
10030097-105		$ 581
10030100-002	37 in. modern curved left-hand grab bar with flange (front installation) Specify color: White **(002)**, Chrome **(084)**, Brushed Nickel **(105)**	$ 594
10030101-002	37 in. modern curved right-hand grab bar with flange (front installation) Specify color: White **(002)**, Chrome **(084)**, Brushed Nickel **(105)**	$ 594
10030101-105		$ 594
10060311	Corner glass shelf (9 3/8 x 9 3/8 in.) (sold separately) 10 mm frosted glass with a clear band along the edge Compatible with Utile and tile shower walls	$ 174
10060315	10 Corner glass shelf (9 3/8 X 9 3/8 in) 10 mm frosted glass with a clear band along the edge	$ 1643
10029996-084	18 in. modern straight grab bar with flange (front installation) Specify colour: White **(002)**, Chrome **(084)**, Brushed Nickel **(105)**	$ 331
10029996-002		$ 331
10029996-105		$ 331
10029997-002	24 in. modern straight grab bar with flange (front installation) Specify color: White **(002)**, Chrome **(084)**, Brushed Nickel **(105)**	$ 378
10029997-105		$ 378
10029997-084		$ 378
10029998-084	30 in. modern straight grab bar with flange (front installation) Specify colour: White **(002)**, Chrome **(084)**, Brushed Nickel **(105)**	$ 403
10029998-002		$ 403
10029998-105		$ 403
10029999-105	36 in. modern straight grab bar with flange (front installation) Specify colour: White **(002)**, Chrome **(084)**, Brushed Nickel **(105)**	$ 427
10029999-002		$ 427
10029999-084		$ 427
10030086-002	48 in. modern straight grab bar with flange (front installation) Specify color: White **(002)**, Chrome **(084)**, Brushed Nickel **(105)**	$ 501
10030086-105		$ 501
10030086-084		$ 501
10030093-084	23 in. Curved left-hand grab bar with flange (front installation) Specify colour: White **(002)**, Chrome **(084)**, Brushed Nickel **(105)**	$ 536
10030093-002		$ 536
10030093-105		$ 536

Go to Table of Contents

BACK WALL

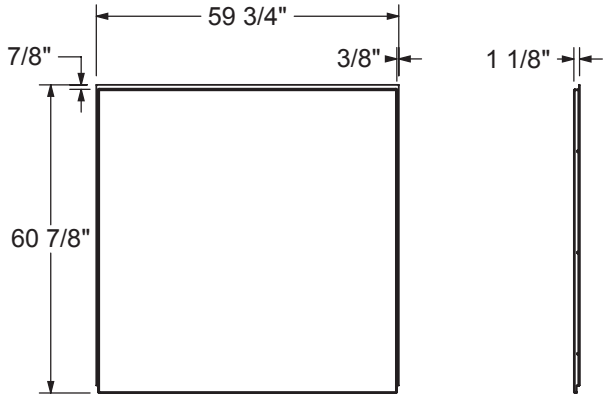

SIDE WALL

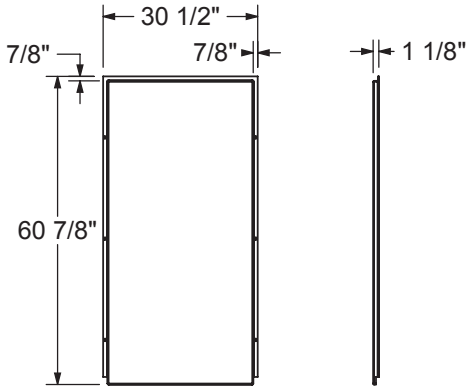

TOP VIEW (ASSEMBLED)

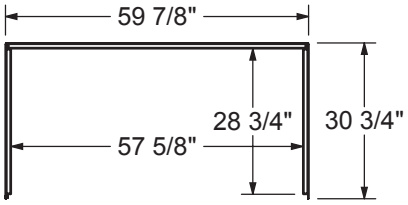

This product is designed to be installed in a building that conforms with the requirements of the National Building Code of Canada 2005

All dimensions are approximate. Structure measurements must be verified against the unit to ensure proper fit.

Back wall - 32x72 in.

Material : Acrylic

Features

- Back wall
- Integrated convenient footrest
- Designed for ease of maintenance
- Easy front installation with snap clips

BACK WALL - 32X72 IN. - 105068

SKU	Color	Dimensions & Weight	Packaging	MSRP
105068-000-001-000	White	32” x 72” x 1 1/2” / 38 lb	14 ft^3	$ 834

BACK WALL - 36X72 IN. - 105069

SKU	Color	Dimensions & Weight	Packaging	MSRP
105069-000-001-000	White	36” x 72” x 1 1/2” / 42 lb	14 ft^3	$ 834

BACK WALL - 42X72 IN. - 105070

SKU	Color	Dimensions & Weight	Packaging	MSRP
105070-000-001-000	White	42” x 72” x 1 1/2” / 42 lb	14 ft^3	$ 916

BACK WALL - 48X72 IN. - 105071

SKU	Color	Dimensions & Weight	Packaging	MSRP
105071-000-001-000	White	48” x 72” x 1 1/2” / 48 lb	18 ft^3	$ 1141

BACK WALL - 60X72 IN. - 105072

SKU	Color	Dimensions & Weight	Packaging	MSRP
105072-000-001-000	White	60” x 72” x 1 1/2” / 52 lb	23 ft^3	$ 1185

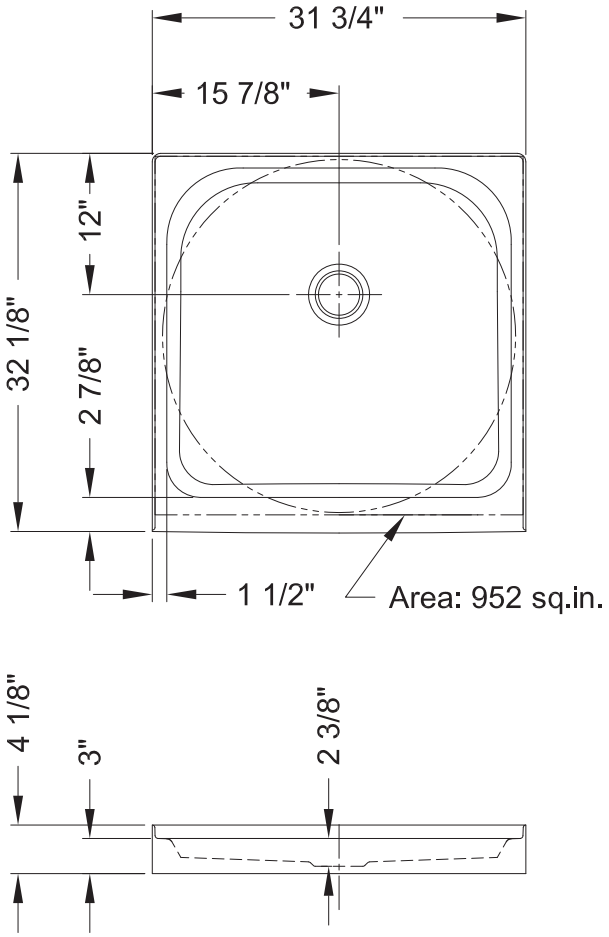

All dimensions are approximate and subject to change without prior notice.
Please refer to installation guide before installing unit.

Wall set (2 walls) 30x72 in.

Material : Acrylic

Features

- Wall set (2 walls)
- Integrated convenient footrest
- Designed for ease of maintenance
- Easy front installation with snap clips

WALL SET (2 WALLS) 30X72 IN. - 105062

SKU	Color	Dimensions & Weight	Packaging	MSRP
105062-000-001-000	White	30” x 30” x 72” / 53 lb	17 ft^3	$ 1099

WALL SET (2 WALLS) 32X72 IN. - 105063

SKU	Color	Dimensions & Weight	Packaging	MSRP
105063-000-001-000	White	32” x 32” x 72” / 57 lb	17 ft^3	$ 1185

WALL SET 36X72 IN. - 105064

SKU	Color	Dimensions & Weight	Packaging	MSRP
105064-000-001-000	White	36” x 36” x 72” / 64 lb	17 ft^3	$ 1316

WALL SET (2 WALLS) 38X72 IN. - 105065

SKU	Color	Dimensions & Weight	Packaging	MSRP
105065-000-001-000	White	38” x 38” x 72” / 68 lb	20 ft^3	$ 1361

WALL SET 40X72 IN. - 105066

SKU	Color	Dimensions & Weight	Packaging	MSRP
105066-000-001-000	White	40” x 40” x 72” / 71 lb	20 ft^3	$ 1450

WALL SET (2 WALLS) 42X72 IN. - 105067

SKU	Color	Dimensions & Weight	Packaging	MSRP
105067-000-001-000	White	42” x 42” x 72” / 75 lb	20 ft^3	$ 1552

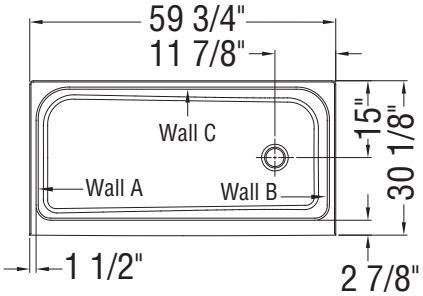

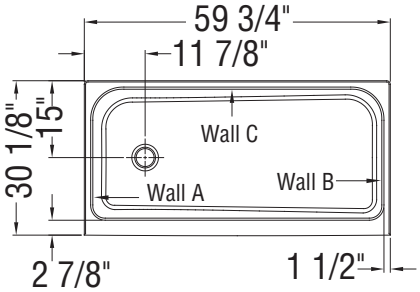

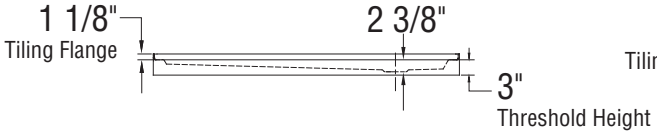

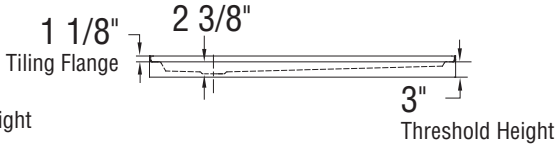

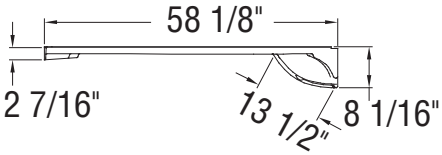

Important

Center your plumbing in the highlighted area. Exact plumbing position may vary upon model specifications, please refer to the supplier's instructions for more details

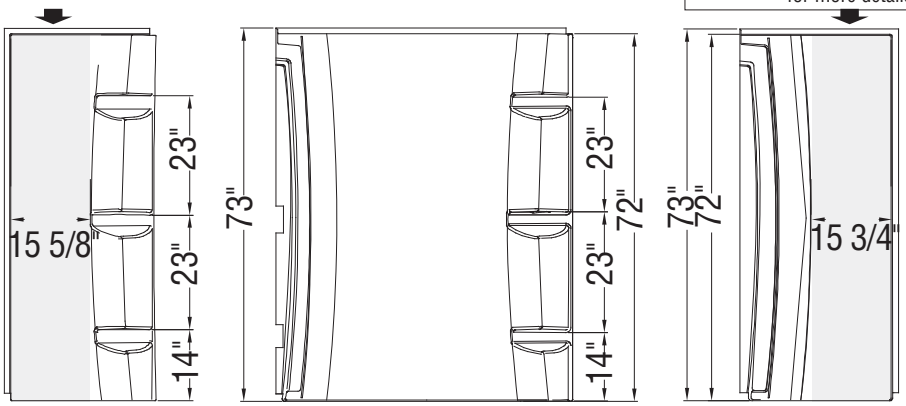

Wall A **Wall C** **Wall B**

All dimensions are approximate. Structure measurements must be verified against the unit to ensure proper fit.

Go to Table of Contents

Effika 6030

Material : Polystyrene

Features

- 3-piece wall set for easier installation and handling
- Built-in corner channel ensuring seamless connection and allowing adjustment for out of plumb alcoves
- Easy glue-up installation on drywalls
- Add optional accessories to store all your bath essentials
- Light-weight and easy to handle
- Tub wall surround includes: 1 back panel and 2 side panels
- High gloss finish
- Smooth and easy to clean surface with few seams
- Compatible with most 60 in. by 30 in. wide bathtubs

EFFIKA 6030 - 106697

SKU	Color	Dimensions & Weight	Packaging	MSRP
106697-000-272-000	White	60” x 29 15/16” x 60” / 9 lb	10.33 ft^3	$ 544

Go to Table of Contents

SIDE WALL (LEFT SHOWN)

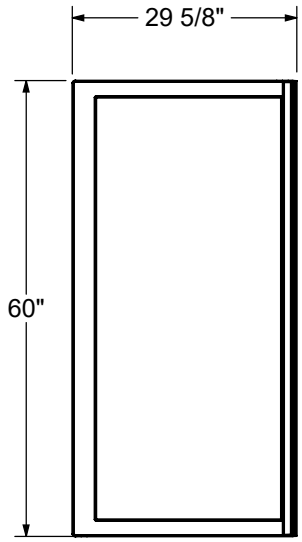

BACK WALL

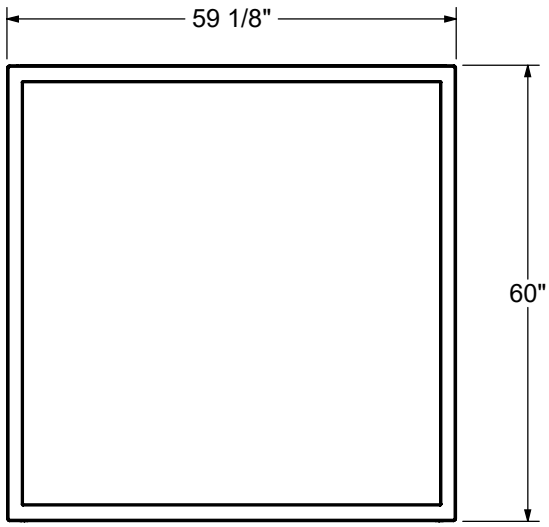

TOP VIEW (ASSEMBLED)

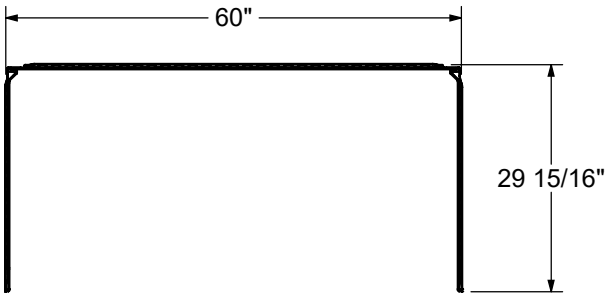

All dimensions are approximate. Structure measurements must be verified against the unit to ensure proper fit.

Acolyte 6238 Four-piece Wall Kit

Material : AcrylX

Features

- Available with front-installed accessories, whether you choose the code-compliant package or the Premium accessible package
- Innovative wall solution featuring a built-in Ulok for precise corner alignment and a pin system to securely hold the 2-piece back wall in place
- Reinforced for extra support, these shower walls are safe for all users and ready for front-installed grab bars.
- Additional reinforcement need to be added prior to seat installation (refer to installation instructions for more details)
- Only compatible with the Acolyte 6238 shower bases
- Available with front-installed accessories, whether you choose the code-compliant package or the Premium accessible package
- Resistant to mold, mildew, and bacteria for easy cleaning and maintenance; ideal for high traffic area.
- Spacious interior floor dimensions to meet acccessibility code requirements
- This product is designed to enhance the functionality of your shower while maintaining a stylish appearance that complements your space

ACOLYTE 6238 FOUR-PIECE WALL KIT - 108257

SKU		Color	Dimensions & Weight	Packaging	MSRP
108257-113-002-000		White	62 1/2” x 38” x 80” / 200 lb	13.33 ft^3	$ 2697
108257-113-002-101					$ 4563
108257-113-002-102					$ 4563
108257-113-002-103					$ 4563
108257-113-002-104					$ 4563
108257-113-002-105	Premium				$ 4563
108257-113-002-106					$ 4563
108257-113-002-107					$ 4563

ACCESSORIES

SKU	Description	MSRP
10029997-002	24 in. modern straight grab bar with flange (front installation) Specify color: White **(002)**, Chrome **(084)**, Brushed Nickel **(105)**	$ 378
10029997-105		$ 378
10029997-084		$ 378
10030084-002	42 in. modern straight grab bar with flange (front installation) Specify color: White **(002)**, Chrome **(084)**	$ 469

BASE MODEL

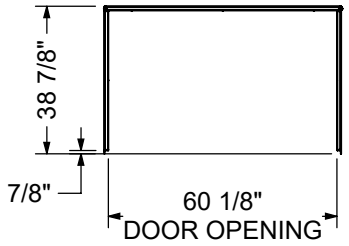

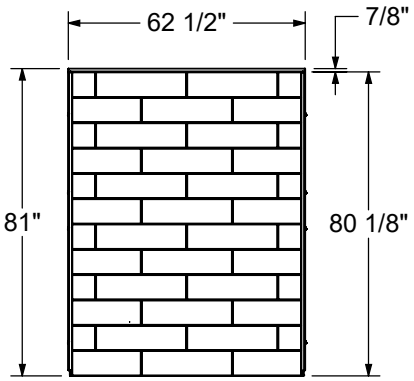

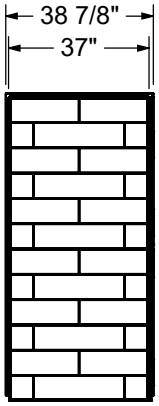

REINFORCEMENT BACKING

Right wall reinforcement shown
Left wall reinforcement symmetrical

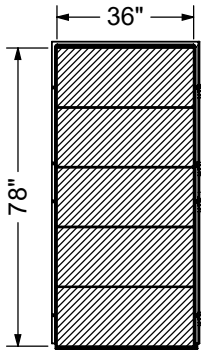

Back wall reinforcement

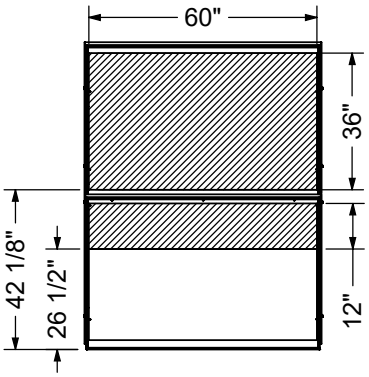

All dimensions are approximate. Structure measurements must be verified against the unit to ensure proper fit.

Shower Doors

Luminescence shower door with B3Square 4832 shower base

Duel Alto Shower Doors

Material : Tempered Glass

Features

- 8 mm (5/16”) tempered glass
- 78” high clear glass panel
- GlassShield® technology pre-installed - provides extra layer of security for homes with children or elderly residents
- Large knob on opposite side of handle for easy opening and closing.
- Sleek and square elements for a modern look
- High quality rollers for smooth glide
- The frameless design brings a sense of spaciousness to the room and creates a sleek, minimalist look.
- Header leveling and locking System innovation allows for header adjustment
- 1/2” out-of-plumb adjustment

DUEL ALTO 56-59 X 78 - 8 MM - 136955

SKU	Glass / Finish	Dimensions & Weight	MSRP
136955-810-084-000	Clear with GlassShield / Chrome	56” - 59” x 78” / 137 lb	$ 1928
136955-810-280-000	Clear with GlassShield / Chrome and Matte White		$ 2022
136955-810-289-000	Clear with GlassShield / Brushed Nickel and Matte Black		$ 2088
136955-810-290-000	Clear with GlassShield / Brushed Nickel and Matte White		$ 2088
136955-810-305-000	Clear with GlassShield / Brushed Nickel		$ 1996
136955-810-340-000	Clear with GlassShield / Matte Black		$ 1996
136955-810-350-000	Clear with GlassShield / Chrome and Matte Black		$ 2022
136955-810-360-000	Clear with GlassShield / Matte Black and Chrome		$ 2088
136955-810-380-000	Clear with GlassShield / Matte Black and Brushed Gold		$ 2088

DUEL ALTO 44-47 X 78 - 8 MM - 136956

SKU	Glass / Finish	Dimensions & Weight	MSRP
136956-810-084-000	Clear with GlassShield / Chrome	44” - 47” x 78” / 110 lb	$ 1792
136956-810-280-000	Clear with GlassShield / Chrome and Matte White		$ 1884
136956-810-289-000	Clear with GlassShield / Brushed Nickel and Matte Black		$ 1952
136956-810-290-000	Clear with GlassShield / Brushed Nickel and Matte White		$ 1952
136956-810-305-000	Clear with GlassShield / Brushed Nickel		$ 1859
136956-810-340-000	Clear with GlassShield / Matte Black		$ 1928
136956-810-350-000	Clear with GlassShield / Chrome and Matte Black		$ 1884
136956-810-360-000	Clear with GlassShield / Matte Black and Chrome		$ 2022
136956-810-380-000	Clear with GlassShield / Matte Black and Brushed Gold		$ 2022

ACCESSORIES

SKU	Description	MSRP
10068850-291-600	Mixed Finish Hardware Replacement Kit for Duel and Duel Alto. Available colors: Chrome **(084)**, Matte White **(291)**, Matte Black **(340)** and Brushed Gold **(343)**	$ 109
10068850-084-600		$ 109
10068850-343-600		$ 109
10068850-340-600		$ 109

STANDARD

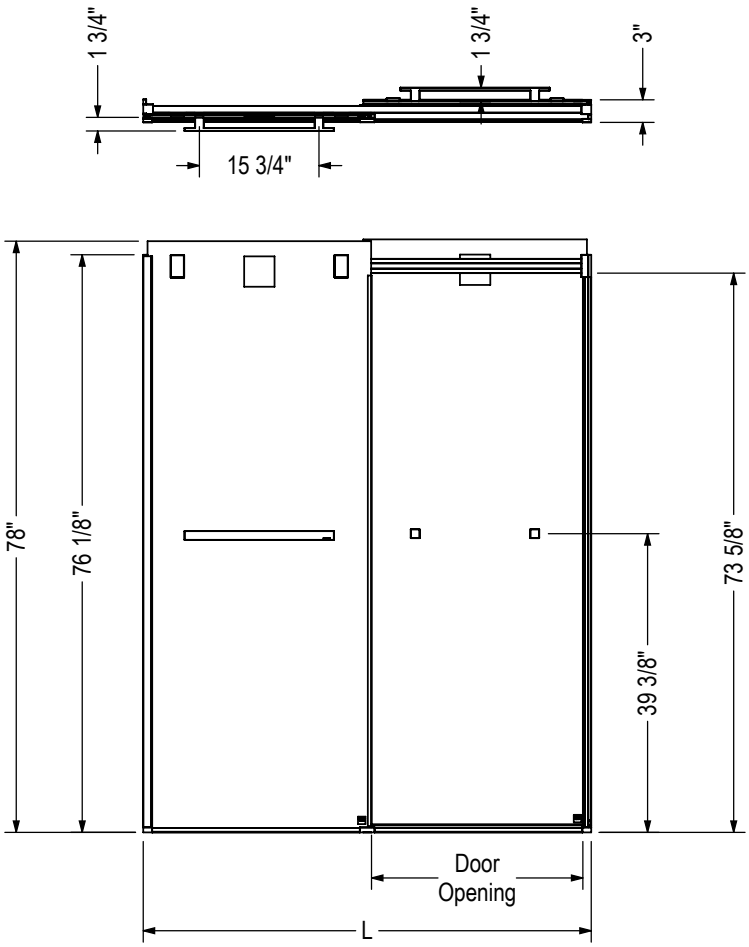

Code	Description	L Adjustable	Door Opening	Wall Adjustment
136955	Duel Alto Bypass 56" - 59" x 78"	56" - 59"	24 1/2" - 27 1/2"	1/2" per wall jamb
136956	Duel Alto Bypass 44" - 47" x 78"	44" - 47"	18 1/2" - 21 1/2"	1/2" per wall jamb

All dimensions are approximate. Structure measurements must be verified against the unit to ensure proper fit.

Go to Table of Contents

Kameleon SC Shower Doors - 6 mm

Material : Tempered Glass

Features

- Innovative SOFT CLOSE by MAAX prevents slamming
- Silent guide eliminates the rattling noise
- High quality rollers for smooth glide
- Safety features: header lock and panel anti-jump
- 6mm tempered glass and frame color choice
- Modern towel bar
- Reversible header: one side round and one side flat

KAMELEON SC 55-59 X 71 - 6MM - 134665

SKU	Glass / Finish	Dimensions & Weight	Packaging	MSRP
134665-900-084-000	Clear / Chrome	55” - 59” x 71” / 106 lb	5.56 ft^3	$ 1116
134665-900-172-000	Clear / Dark Bronze			$ 1189
134665-900-305-000	Clear / Brushed Nickel			$ 1164
134665-900-340-000	Clear / Matte Black			$ 1189

COMMON OPTIONS

SKU	Description	MSRP
OPT20248-084	24 in. Square towel bar Available colours: Chrome **(084)**, Dark Bronze **(172)** and Brushed Nickel **(305)**	$ 125
OPT20248-305		$ 133
OPT20248-172		$ 137
OPT20246-084	24 in. T-round towel bar Available colours: Chrome **(084)**, Dark Bronze **(172)** and Brushed Nickel **(305)**	$ 125
OPT20246-305		$ 133
OPT20246-172		$ 137

ACCESSORIES

SKU	Description	MSRP
10068376-305	24 in. Square towel bar Available colours: Chrome **(084)**, Dark Bronze **(172)** and Brushed Nickel **(305)**	$ 284
10068376-172		$ 293
10068376-084		$ 272
10068402-092-600	Watertight kit for Mirolin tub shower and shower	$ 106
10068410-005-601	Soft Close by MAAX for Kameleon/Aura doors only	$ 204

STANDARD

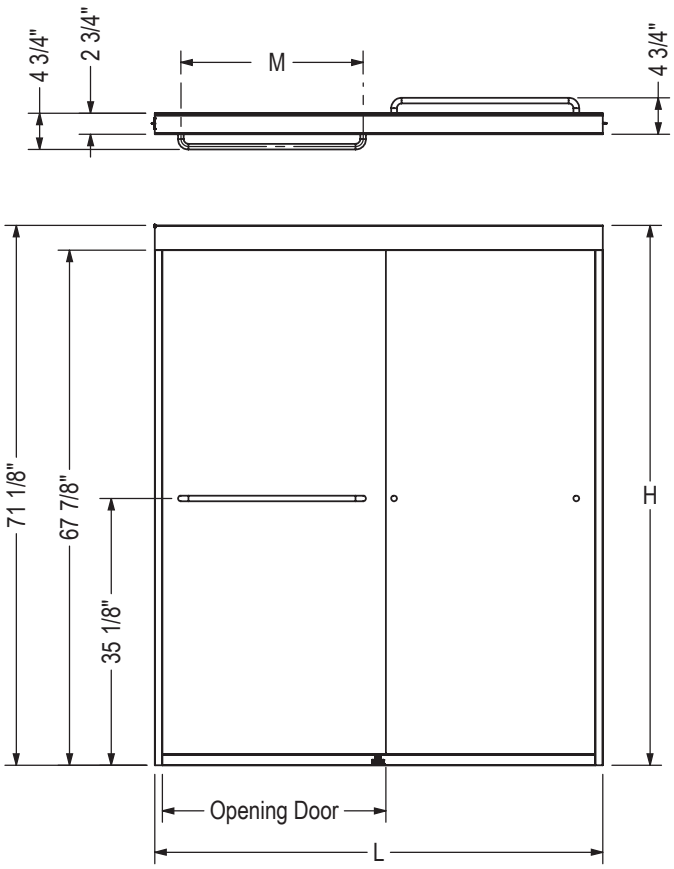

Description	Opening Door Adjustable	M	L Adjustable	H
Shower Door 40"-44"x71"x6mm	15 1/2" - 19 1/2"	18''	40" - 44"	71"
Shower Door 43"-47"x71"x6mm	18 1/2" - 22 1/2"	18''	43" - 47"	71"
Shower Door 51"-55"x71"x6mm	21 1/2" - 25 1/2"	24''	51" - 55"	71"
Shower Door 55"-59"x71"x6mm	23 1/2" - 27 1/2"	24''	55" - 59"	71"

All dimensions are approximate. Structure measurements must be verified against the unit to ensure proper fit.

Go to Table of Contents

Kameleon SC Shower Doors - 6 mm

Material : Tempered Glass

Features

- Innovative SOFT CLOSE by MAAX prevents slamming
- Silent guide eliminates the rattling noise
- High quality rollers for smooth glide
- Safety features: header lock and panel anti-jump
- 6mm tempered glass and frame color choice
- Modern towel bar
- Reversible header: one side round and one side flat

KAMELEON SC 40-44 X 71 - 6MM - 134662

SKU	Glass / Finish	Dimensions & Weight	Packaging	MSRP
134662-900-084-000	Clear / Chrome	40” - 44” x 71” / 84 lb	6.4 ft^3	$ 1041

KAMELEON SC 51-55 X 71 - 6MM - 134664

SKU	Glass / Finish	Dimensions & Weight	Packaging	MSRP
134664-900-084-000	Clear / Chrome	51” - 55” x 71 1/8” / 98 lb	4.69 ft^3	$ 1118

COMMON OPTIONS

SKU	Description	MSRP
OPT20245-305	18 in. T-round towel bar Available colors: Chrome **(084)** , Dark Bronze **(172)** and Brushed Nickel **(305)**	$ 114
OPT20245-172		$ 120
OPT20245-084		$ 106
OPT20247-305	18 in. Square towel bar Available colours: Chrome **(084)**, Dark Bronze **(172)** and Brushed Nickel **(305)**	$ 114
OPT20247-084		$ 106
OPT20247-172		$ 120

ACCESSORIES

SKU	Description	MSRP
10068402-092-600	Watertight kit for Mirolin tub shower and shower	$ 106
10068410-005-601	Soft Close by MAAX for Kameleon/Aura doors only	$ 204

STANDARD

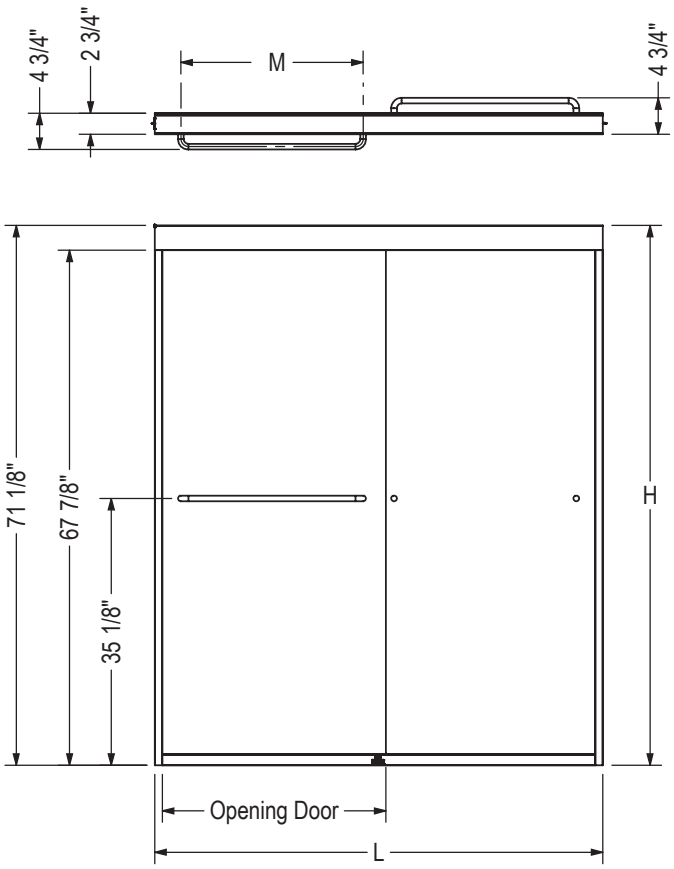

Description	Opening Door Adjustable	M	L Adjustable	H
Shower Door 40"-44"x71"x6mm	15 1/2" - 19 1/2"	18''	40" - 44"	71"
Shower Door 43"-47"x71"x6mm	18 1/2" - 22 1/2"	18''	43" - 47"	71"
Shower Door 51"-55"x71"x6mm	21 1/2" - 25 1/2"	24''	51" - 55"	71"
Shower Door 55"-59"x71"x6mm	23 1/2" - 27 1/2"	24''	55" - 59"	71"

All dimensions are approximate. Structure measurements must be verified against the unit to ensure proper fit.

Kameleon SC Shower Doors - 6 mm

Material : Tempered Glass

Features

- Innovative SOFT CLOSE by MAAX prevents slamming
- Silent guide eliminates the rattling noise
- High quality rollers for smooth glide
- Safety features: header lock and panel anti-jump
- 6mm tempered glass and frame color choice
- Modern towel bar
- Reversible header: one side round and one side flat

KAMELEON SC 43-47 X 71 - 6MM - 134663

SKU	Glass / Finish	Dimensions & Weight	Packaging	MSRP
134663-900-084-000	Clear / Chrome	43” - 47” x 71” / 90 lb	4.69 ft^3	$ 1079
134663-900-172-000	Clear / Dark Bronze			$ 1143
134663-900-305-000	Clear / Brushed Nickel			$ 1130
134663-900-340-000	Clear / Matte Black			$ 1143

COMMON OPTIONS

SKU	Description	MSRP
OPT20246-084	24 in. T-round towel bar Available colours: Chrome **(084)**, Dark Bronze **(172)** and Brushed Nickel **(305)**	$ 125
OPT20246-305		$ 133
OPT20246-172		$ 137
OPT20247-305	18 in. Square towel bar Available colours: Chrome **(084)**, Dark Bronze **(172)** and Brushed Nickel **(305)**	$ 114
OPT20247-084		$ 106
OPT20247-172		$ 120
OPT20248-084	24 in. Square towel bar Available colours: Chrome **(084)**, Dark Bronze **(172)** and Brushed Nickel **(305)**	$ 125
OPT20248-305		$ 133
OPT20248-172		$ 137
OPT20245-305	18 in. T-round towel bar Available colors: Chrome **(084)** , Dark Bronze **(172)** and Brushed Nickel **(305)**	$ 114
OPT20245-172		$ 120
OPT20245-084		$ 106

ACCESSORIES

SKU	Description	MSRP
10068376-305	24 in. Square towel bar Available colours: Chrome **(084)**, Dark Bronze **(172)** and Brushed Nickel **(305)**	$ 284
10068376-172		$ 293
10068376-084		$ 272
10068402-092-600	Watertight kit for Mirolin tub shower and shower	$ 106
10068410-005-601	Soft Close by MAAX for Kameleon/Aura doors only	$ 204

STANDARD

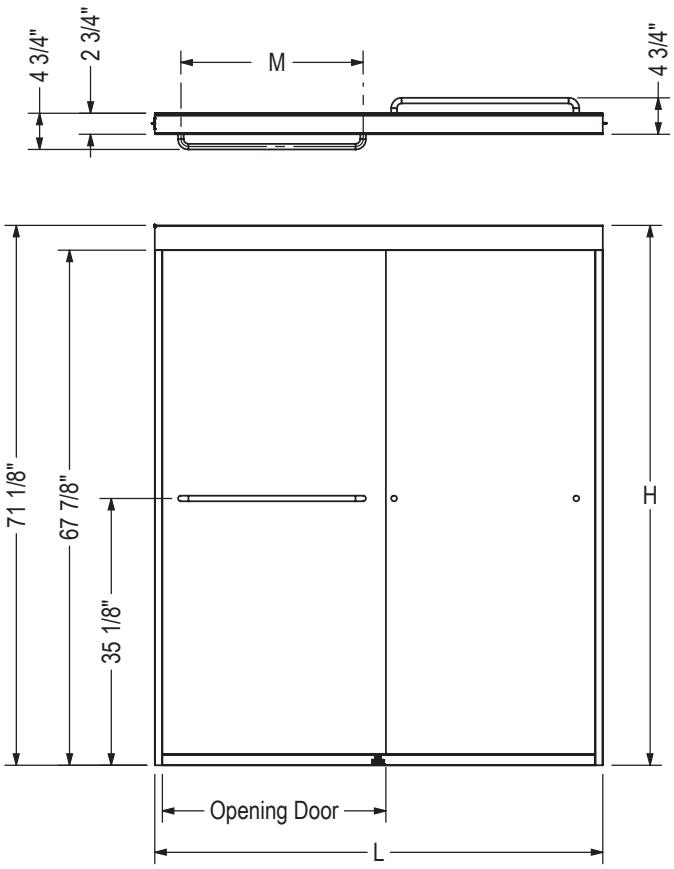

Description	Opening Door Adjustable	M	L Adjustable	H
Shower Door 40"-44"x71"x6mm	15 1/2" - 19 1/2"	18''	40" - 44"	71"
Shower Door 43"-47"x71"x6mm	18 1/2" - 22 1/2"	18''	43" - 47"	71"
Shower Door 51"-55"x71"x6mm	21 1/2" - 25 1/2"	24''	51" - 55"	71"
Shower Door 55"-59"x71"x6mm	23 1/2" - 27 1/2"	24''	55" - 59"	71"

All dimensions are approximate. Structure measurements must be verified against the unit to ensure proper fit.

Go to Table of Contents

Kameleon SC Shower Doors - 8 mm

Material : Tempered Glass

Features

- Innovative SOFT CLOSE by MAAX prevents slamming
- Silent guide eliminates the rattling noise
- High quality rollers for smooth glide
- Safety features: header lock and panel anti-jump
- 8 mm tempered glass and frame color choice
- Modern towel bar
- Reversible header: one side round and one side flat

KAMELEON SC 43-47 X 71 - 8MM - 134674

SKU	Glass / Finish	Dimensions & Weight	Packaging	MSRP
134674-900-084-000	Clear / Chrome	43” - 47” x 71” / 116 lb	4.69 ft³	$ 1233
134674-900-172-000	Clear / Dark Bronze			$ 1310
134674-900-305-000	Clear / Brushed Nickel			$ 1288
134674-900-340-000	Clear / Matte Black			$ 1310

KAMELEON SC 55-59 X 71 - 8MM - 134675

SKU	Glass / Finish	Dimensions & Weight	Packaging	MSRP
134675-900-084-000	Clear / Chrome	55” - 59” x 71” / 137 lb	5.56 ft³	$ 1271
134675-900-172-000	Clear / Dark Bronze			$ 1351
134675-900-305-000	Clear / Brushed Nickel			$ 1328
134675-900-340-000	Clear / Matte Black			$ 1351

COMMON OPTIONS

SKU	Description	MSRP
OPT20246-084	24 in. T-round towel bar Available colours: Chrome **(084)**, Dark Bronze **(172)** and Brushed Nickel **(305)**	$ 125
OPT20246-305		$ 133
OPT20246-172		$ 137
OPT20248-084	24 in. Square towel bar Available colours: Chrome **(084)**, Dark Bronze **(172)** and Brushed Nickel **(305)**	$ 125
OPT20248-305		$ 133
OPT20248-172		$ 137

ACCESSORIES

SKU	Description	MSRP
10068376-305	24 in. Square towel bar Available colours: Chrome **(084)**, Dark Bronze **(172)** and Brushed Nickel **(305)**	$ 284
10068376-172		$ 293
10068376-084		$ 272
10068402-092-600	Watertight kit for Mirolin tub shower and shower	$ 106
10068410-005-601	Soft Close by MAAX for Kameleon/Aura doors only	$ 204

STANDARD

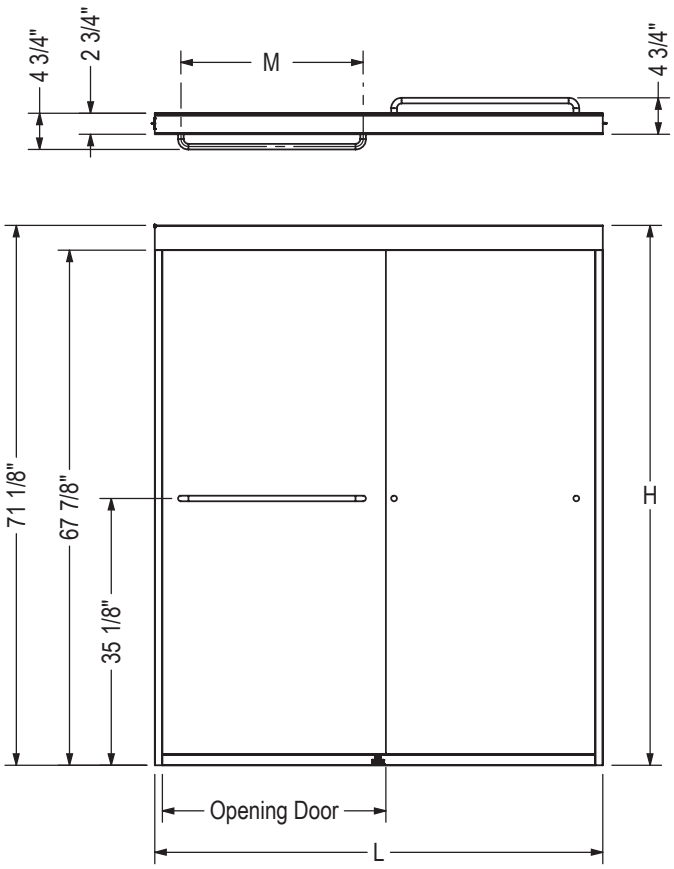

Description	Opening Door Adjustable	M	L Adjustable	H
Shower Door 43"-47"x71"x8mm	18 1/2" - 22 1/2"	18"	43" - 47"	71"
Shower Door 55"-59"x71"x8mm	23 1/2" - 27 1/2"	24"	55" - 59"	71"

All dimensions are approximate. Structure measurements must be verified against the unit to ensure proper fit.

Kameleon Shower Doors - 6 mm

Material : Tempered Glass

Features

- Shower Door for Alcove Installation
- Bi-directional glass panels for flexible entry and easy access to fixtures on the left or right-hand side
- Silent guide glides smoothly and quietly, ensuring a seamless shower experience
- 6 mm (1/4") tempered glass ensuring sturdiness and stability
- The minimalist design maximizes the opening space, allowing easy entry and exit into the shower space
- Safety features: header lock and panel anti-jump
- Reversible header: one side round and one side flat
- The horizontal handle can double as a stylish Towel bar
- Despite its premium features, the shower door is offered at an affordable price point.

KAMELEON 43-47 X 71 - 6MM - 134563

SKU	Glass / Finish	Dimensions & Weight	Packaging	MSRP
134563-900-084-000	Clear / Chrome	43" - 47" x 71" / 80 lb	4.69 ft³	$ 950
134563-900-172-000	Clear / Dark Bronze			$ 1017
134563-900-305-000	Clear / Brushed Nickel			$ 997
134563-900-340-000	Clear / Matte Black			$ 1017
134563-927-084-000	Fluted / Chrome			$ 1117
134563-927-172-000	Fluted / Dark Bronze			$ 1195
134563-927-305-000	Fluted / Brushed Nickel			$ 1173
134563-927-340-000	Fluted / Matte Black			$ 1195
134563-978-084-000	Frosted / Chrome			$ 1123
134563-978-172-000	Frosted / Dark Bronze			$ 1198
134563-978-305-000	Frosted / Brushed Nickel			$ 1177
134563-978-340-000	Frosted / Matte Black			$ 1165

KAMELEON 55-59 X 71 - 6MM - 134565

SKU	Glass / Finish	Dimensions & Weight	Packaging	MSRP
134565-900-084-000	Clear / Chrome	55" - 59" x 71" / 96 lb	4.69 ft³	$ 987
134565-900-172-000	Clear / Dark Bronze			$ 1055
134565-900-305-000	Clear / Brushed Nickel			$ 1036
134565-900-340-000	Clear / Matte Black			$ 1055
134565-927-084-000	Fluted / Chrome			$ 1160
134565-927-172-000	Fluted / Dark Bronze			$ 1241
134565-927-305-000	Fluted / Brushed Nickel			$ 1219
134565-927-340-000	Fluted / Matte Black			$ 1241
134565-978-084-000	Frosted / Chrome			$ 1163
134565-978-172-000	Frosted / Dark Bronze			$ 1246
134565-978-305-000	Frosted / Brushed Nickel			$ 1223
134565-978-340-000	Frosted / Matte Black			$ 1211

COMMON OPTIONS

SKU	Description	MSRP
OPT20245-305	18 in. T-round towel bar Available colors: Chrome **(084)** , Dark Bronze **(172)** and Brushed Nickel **(305)**	$ 114

COMMON OPTIONS

SKU	Description	MSRP
OPT20245-172	18 in. T-round towel bar Available colors: Chrome **(084)** , Dark Bronze **(172)** and Brushed Nickel **(305)**	$ 120
OPT20245-084		$ 106
OPT20247-305	18 in. Square towel bar Available colours: Chrome **(084)**, Dark Bronze **(172)** and Brushed Nickel **(305)**	$ 114
OPT20247-084		$ 106
OPT20247-172		$ 120

ACCESSORIES

SKU	Description	MSRP
10068402-092-600	Watertight kit for Mirolin tub shower and shower	$ 106
10068410-005-601	Soft Close by MAAX for Kameleon/Aura doors only	$ 204

STANDARD

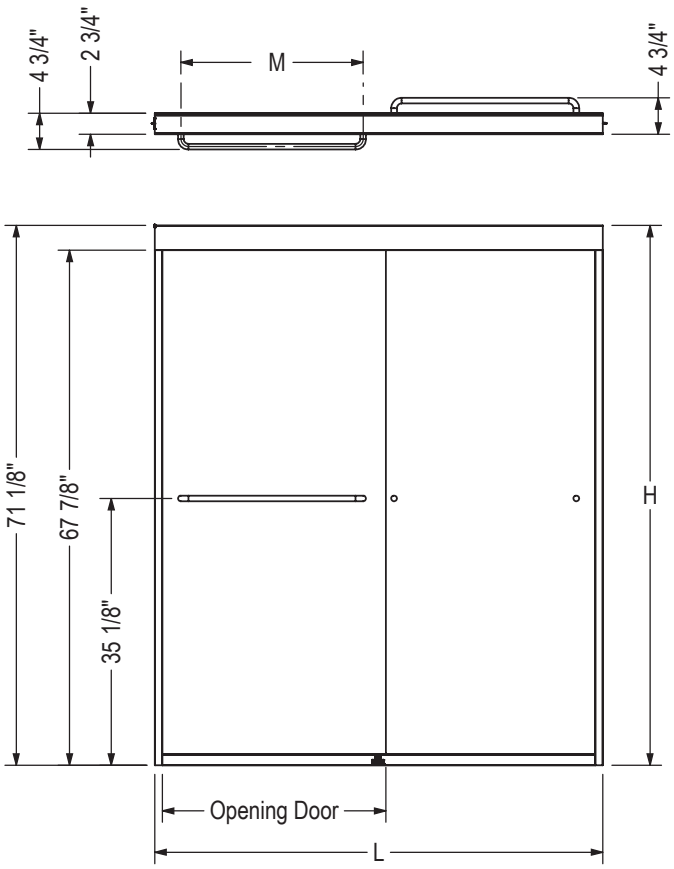

Description	Opening Door Adjustable	M	L Adjustable	H
Shower Door 40"-44"x71"x6mm	15 1/2" - 19 1/2"	18''	40" - 44"	71"
Shower Door 43"-47"x71"x6mm	18 1/2" - 22 1/2"	18''	43" - 47"	71"
Shower Door 51"-55"x71"x6mm	21 1/2" - 25 1/2"	24''	51" - 55"	71"
Shower Door 55"-59"x71"x6mm	23 1/2" - 27 1/2"	24''	55" - 59"	71"

All dimensions are approximate. Structure measurements must be verified against the unit to ensure proper fit.

Kameleon Shower Doors - 6 mm

Material : Tempered Glass

Features

- Shower Door for Alcove Installation
- Bi-directional glass panels for flexible entry and easy access to fixtures on the left or right-hand side
- Silent guide glides smoothly and quietly, ensuring a seamless shower experience
- 6 mm (1/4") tempered glass ensuring sturdiness and stability
- The minimalist design maximizes the opening space, allowing easy entry and exit into the shower space
- Safety features: header lock and panel anti-jump
- Reversible header: one side round and one side flat
- The horizontal handle can double as a stylish Towel bar
- Despite its premium features, the shower door is offered at an affordable price point.

KAMELEON 40-44 X 71 - 6MM - 134562

SKU	Glass / Finish	Dimensions & Weight	Packaging	MSRP
134562-900-084-000	Clear / Chrome	40" - 44" x 71" / 74 lb	3.91 ft^3	$ 911
134562-900-340-000	Clear / Matte Black			$ 948

KAMELEON 51-55 X 71 - 6MM - 134564

SKU	Glass / Finish	Dimensions & Weight	Packaging	MSRP
134564-900-084-000	Clear / Chrome	51" - 55" x 71" / 88 lb	4.69 ft^3	$ 947
134564-900-340-000	Clear / Matte Black			$ 985

COMMON OPTIONS

SKU	Description	MSRP
OPT20245-305	18 in. T-round towel bar Available colors: Chrome **(084)** , Dark Bronze **(172)** and Brushed Nickel **(305)**	$ 114
OPT20245-172		$ 120
OPT20245-084		$ 106
OPT20247-305	18 in. Square towel bar Available colours: Chrome **(084)**, Dark Bronze **(172)** and Brushed Nickel **(305)**	$ 114
OPT20247-084		$ 106
OPT20247-172		$ 120

ACCESSORIES

SKU	Description	MSRP
10068402-092-600	Watertight kit for Mirolin tub shower and shower	$ 106

STANDARD

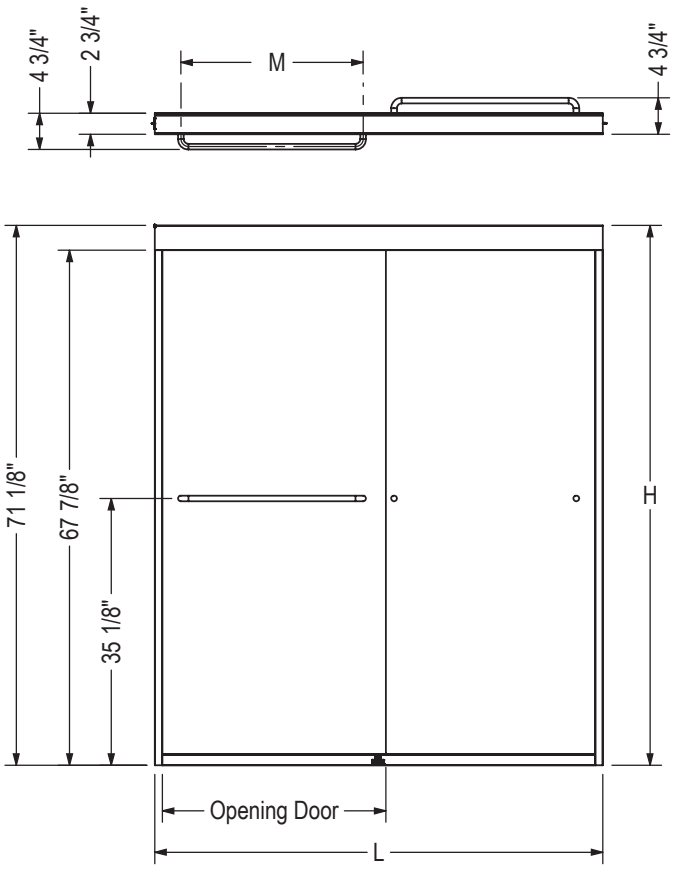

Description	Opening Door Adjustable	M	L Adjustable	H
Shower Door 40"-44"x71"x6mm	15 1/2" - 19 1/2"	18''	40" - 44"	71"
Shower Door 43"-47"x71"x6mm	18 1/2" - 22 1/2"	18''	43" - 47"	71"
Shower Door 51"-55"x71"x6mm	21 1/2" - 25 1/2"	24''	51" - 55"	71"
Shower Door 55"-59"x71"x6mm	23 1/2" - 27 1/2"	24''	55" - 59"	71"

All dimensions are approximate. Structure measurements must be verified against the unit to ensure proper fit.

Go to Table of Contents

Kameleon Shower Doors - 8 mm

Material : Tempered Glass

Features

- Silent guide eliminates the rattling noise
- High quality rollers for smooth glide
- Safety features: header lock and panel anti-jump
- 8 mm tempered glass and frame color choice
- Modern towel bar
- Reversible header: one side round and one side flat

KAMELEON 43-47 X 71 - 8MM - 134571

SKU	Glass / Finish	Dimensions & Weight	Packaging	MSRP
134571-900-084-000	Clear / Chrome	43” - 47” x 71” / 116 lb	4.69 ft³	$ 1104
134571-900-172-000	Clear / Dark Bronze			$ 1181
134571-900-305-000	Clear / Brushed Nickel			$ 1159
134571-900-340-000	Clear / Matte Black			$ 1181

KAMELEON 55-59 X 71 - 8MM - 134572

SKU	Glass / Finish	Dimensions & Weight	Packaging	MSRP
134572-900-084-000	Clear / Chrome	55” - 59” x 71” / 137 lb	4.85 ft³	$ 1140
134572-900-172-000	Clear / Dark Bronze			$ 1220
134572-900-305-000	Clear / Brushed Nickel			$ 1197
134572-900-340-000	Clear / Matte Black			$ 1220

COMMON OPTIONS

SKU	Description	MSRP
OPT20245-305	18 in. T-round towel bar Available colors: Chrome **(084)** , Dark Bronze **(172)** and Brushed Nickel **(305)**	$ 114
OPT20245-172		$ 120
OPT20245-084		$ 106
OPT20247-305	18 in. Square towel bar Available colours: Chrome **(084)**, Dark Bronze **(172)** and Brushed Nickel **(305)**	$ 114
OPT20247-084		$ 106
OPT20247-172		$ 120

ACCESSORIES

SKU	Description	MSRP
10068402-092-600	Watertight kit for Mirolin tub shower and shower	$ 106
10068410-005-601	Soft Close by MAAX for Kameleon/Aura doors only	$ 204

STANDARD

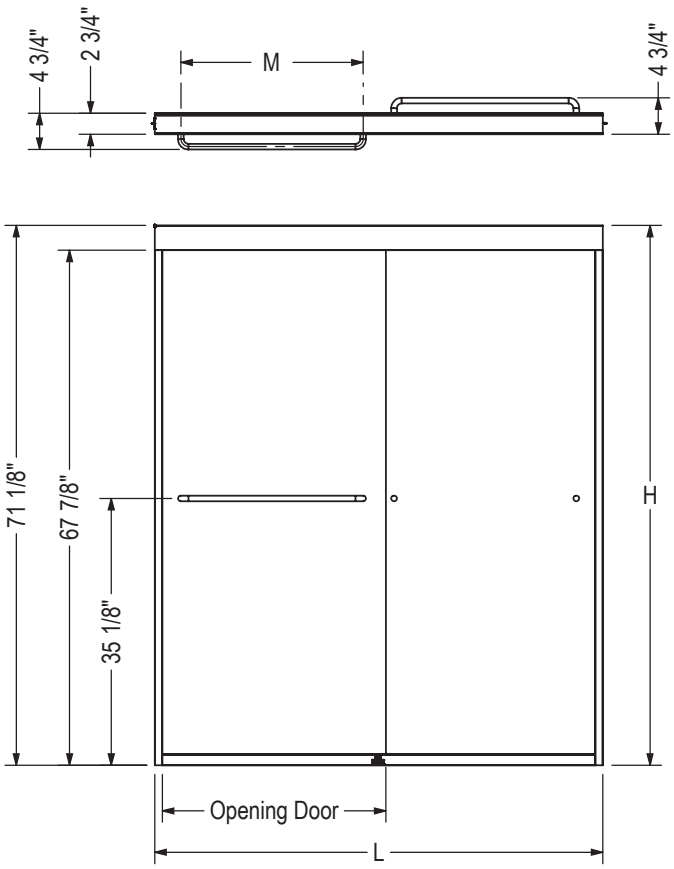

Description	Opening Door Adjustable	M	L Adjustable	H
Shower Door 43"-47"x71"x8mm	18 1/2" - 22 1/2"	18"	43" - 47"	71"
Shower Door 55"-59"x71"x8mm	23 1/2" - 27 1/2"	24"	55" - 59"	71"

All dimensions are approximate. Structure measurements must be verified against the unit to ensure proper fit.

Duel Shower Doors

Material : Tempered Glass

Features

- 8 mm (5/16") tempered glass with Lotus easy clean protection
- High quality rollers for smooth glide
- Fits showers with 70.5in. wall clearance, glass extends to 74 in.
- Designed in North America
- Sleek and square elements for a modern look
- 3in of lateral adjustment to fit many shower opening
- The frameless design brings a sense of spaciousness to the room and creates a sleek, minimalist look.
- 3/4" out-of-plumb adjustment
- Header leveling and locking System innovation allows for header adjustment

DUEL 44-47 X 70 1/2-74 - 136271

SKU	Glass / Finish	Dimensions & Weight	Packaging	MSRP
136271-900-084-000	Clear / Chrome	44" - 47" x 74" / 108 lb	3.59 ft³	$ 1273
136271-900-173-000	Clear / Dark Bronze			$ 1376
136271-900-280-000	Clear / Chrome and Matte White			$ 1366
136271-900-289-000	Clear / Brushed Nickel and Matte Black			$ 1434
136271-900-290-000	Clear / Brushed Nickel and Matte White			$ 1434
136271-900-305-000	Clear / Brushed Nickel			$ 1342
136271-900-340-000	Clear / Matte Black			$ 1376
136271-900-350-000	Clear / Chrome and Matte Black			$ 1366
136271-900-360-000	Clear / Matte Black and Chrome			$ 1468
136271-900-380-000	Clear / Matte Black and Brushed Gold			$ 1468

DUEL 56-58 ½ X 70 ½ X 74 - 8 MM - 136272

SKU	Glass / Finish	Dimensions & Weight	Packaging	MSRP
136272-900-084-000	Clear / Chrome	56" - 58 1/2" x 70 1/2" / 130 lb	4.85 ft³	$ 1369
136272-900-173-000	Clear / Dark Bronze			$ 1472
136272-900-280-000	Clear / Chrome and Matte White			$ 1462
136272-900-289-000	Clear / Brushed Nickel and Matte Black			$ 1529
136272-900-290-000	Clear / Brushed Nickel and Matte White			$ 1529
136272-900-305-000	Clear / Brushed Nickel			$ 1436
136272-900-340-000	Clear / Matte Black			$ 1472
136272-900-350-000	Clear / Chrome and Matte Black			$ 1462
136272-900-360-000	Clear / Matte Black and Chrome			$ 1565
136272-900-380-000	Clear / Matte Black and Brushed Gold			$ 1565

ACCESSORIES

SKU	Description	MSRP
10068850-291-600	Mixed Finish Hardware Replacement Kit for Duel and Duel Alto. Available colors: Chrome **(084)**, Matte White **(291)**, Matte Black **(340)** and Brushed Gold **(343)**	$ 109
10068850-084-600		$ 109
10068850-343-600		$ 109
10068850-340-600		$ 109

STANDARD

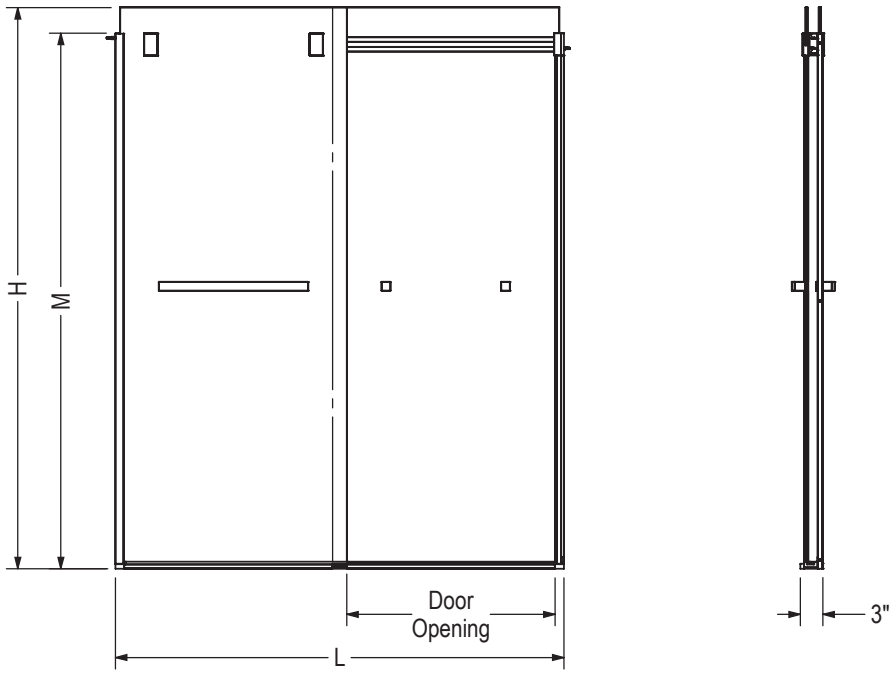

Code	Description	H	M	L Adjustable	Door Opening	Wall Adjustment
136270	Duel 56" - 59" x 55 1/2"	59"	55 1/2"	56" - 59"	24 1/2" - 27 1/2"	3/4"
136271	Duel 44" - 47" x 70 1/2"	74"	70 1/2"	44" - 47"	18 1/2" - 21 1/2"	3/4"
136272	Duel 56" - 59" x 70 1/2"	74"	70 1/2"	56" - 59"	24 1/2" - 27 1/2"	3/4"

All dimensions are approximate. Structure measurements must be verified against the unit to ensure proper fit.

Incognito 70 Shower Doors - 6 mm

Material : Tempered Glass

Features

- 8mm tempered glass provides durability and safety
- Frame finish available in brushed nickel, chrome, dark bronze and matte black color to complement any bathroom decor
- Semi-frameless bypass shower door for alcove installation
- Easy, and intuitive parts on parts installation with up to 1/2 in. out of plumb adjustment
- Reversible for left or right-hand opening, giving you a flexible product for your bathroom needs
- The door catchers prevents the doors from opening unwantedly, which improves product watertight seal
- The unique handle features a large knob that allows an easier opening and closing of the door
- Integrated Anti-jump mechanism provides a smooth, effortless and quiet sliding operation for your shower
- Easy installation process saves time and hassle, making it a great DIY project

INCOGNITO 70 44-47 X 70 1/2 IN. 6MM SHOWER DOOR - 139349

SKU	Glass / Finish	Dimensions & Weight	Packaging	MSRP
139349-900-084-000	Clear / Chrome	44” - 47” x 70 1/2” / 80 lb	4.73 ft^3	$ 931
139349-900-173-000	Clear / Dark Bronze			$ 1003
139349-900-305-000	Clear / Brushed Nickel			$ 979
139349-900-340-000	Clear / Matte Black			$ 1003

INCOGNITO 70 56-59 X 70 1/2 IN. 6MM SHOWER DOOR - 139350

SKU	Glass / Finish	Dimensions & Weight	Packaging	MSRP
139350-900-084-000	Clear / Chrome	56” - 59” x 70 1/2” / 100 lb	5.47 ft^3	$ 1024
139350-900-173-000	Clear / Dark Bronze			$ 1100
139350-900-305-000	Clear / Brushed Nickel			$ 1075
139350-900-340-000	Clear / Matte Black			$ 1100

STANDARD

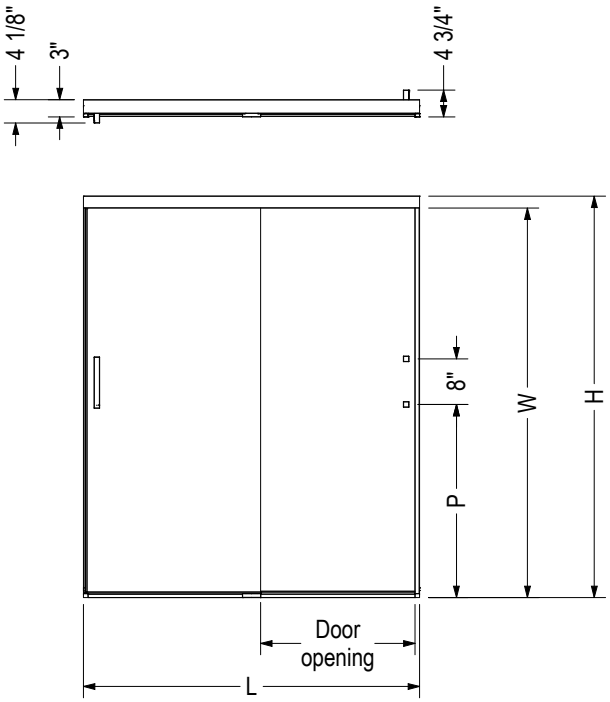

Code	Description	H	W	L Adjustable	Door Opening	P	Wall adjustment
139349	Incognito 6mm 70 1/2" x 44 - 47"	70 1/2"	68 3/8"	44" - 47''	17 1/8" - 21 1/8"	33 7/8"	1/2"
139350	Incognito 6mm 70 1/2" x 56 - 59"	70 1/2"	68 3/8"	56" - 59''	23 1/8" - 27 1/8"	33 7/8"	1/2"
139351	Incognito 6mm 56 3/4" x 56 - 59"	56 3/4"	54 5/8"	56" - 59''	23 1/8" - 27 1/8"	18 7/8"	1/2"
139352	Incognito 8mm 70 1/2" x 44 - 47"	70 1/2"	68 3/8"	44" - 47''	17 1/8" - 21 1/8"	33 7/8"	1/2"
139353	Incognito 8mm 70 1/2" x 56 - 59"	70 1/2"	68 3/8"	56" - 59''	23 1/8" - 27 1/8"	33 7/8"	1/2"
139354	Incognito 8mm 56 3/4" x 56 - 59"	56 3/4"	54 5/8"	56" - 59''	23 1/8" - 27 1/8"	18 7/8"	1/2"

All dimensions are approximate. Structure measurements must be verified against the unit to ensure proper fit.

Incognito 70 Shower Doors - 8 mm

Material : Tempered Glass

Features

- 8mm tempered glass provides durability and safety
- Frame finish available in brushed nickel, chrome and matte black color to complement any bathroom decor
- Semi-frameless bypass shower door for alcove installation
- Easy, and intuitive parts on parts installation with up to 1/2 in. out of plumb adjustment
- Reversible for left or right-hand opening, giving you a flexible product for your bathroom needs
- The door catchers prevents the doors from opening unwantedly, which improves product watertight seal
- The unique handle features a large knob that allows an easier opening and closing of the door
- Integrated Anti-jump mechanism provides a smooth, effortless and quiet sliding operation for your shower
- Easy installation process saves time and hassle, making it a great DIY project

INCOGNITO 70 44-47 X 70 1/2 IN. 8MM SHOWER DOOR - 139352

SKU	Glass / Finish	Dimensions & Weight	Packaging	MSRP
139352-900-084-000	Clear / Chrome	44” - 47” x 70 1/2” / 102 lb	4.36 ft^3	$ 1055
139352-900-305-000	Clear / Brushed Nickel			$ 1124
139352-900-340-000	Clear / Matte Black			$ 1124

INCOGNITO 70 56-59 X 70 1/2 IN. 8MM SHOWER DOOR - 139353

SKU	Glass / Finish	Dimensions & Weight	Packaging	MSRP
139353-900-084-000	Clear / Chrome	56” - 59” x 70 1/2” / 130 lb	5.47 ft^3	$ 1143
139353-900-305-000	Clear / Brushed Nickel			$ 1213
139353-900-340-000	Clear / Matte Black			$ 1213

STANDARD

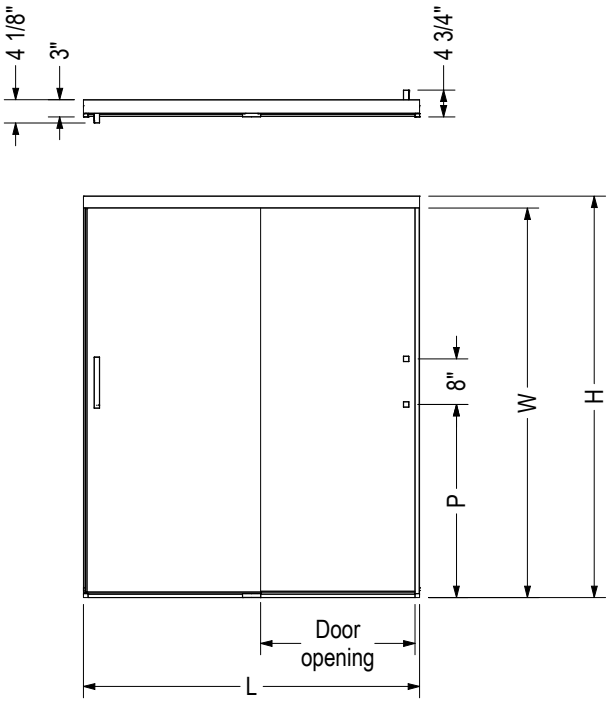

Code	Description	H	W	L Adjustable	Door Opening	P	Wall adjustment
139349	Incognito 6mm 70 1/2" x 44 - 47"	70 1/2"	68 3/8"	44" - 47''	17 1/8" - 21 1/8"	33 7/8"	1/2"
139350	Incognito 6mm 70 1/2" x 56 - 59"	70 1/2"	68 3/8"	56" - 59''	23 1/8" - 27 1/8"	33 7/8"	1/2"
139351	Incognito 6mm 56 3/4" x 56 - 59"	56 3/4"	54 5/8"	56" - 59''	23 1/8" - 27 1/8"	18 7/8"	1/2"
139352	Incognito 8mm 70 1/2" x 44 - 47"	70 1/2"	68 3/8"	44" - 47''	17 1/8" - 21 1/8"	33 7/8"	1/2"
139353	Incognito 8mm 70 1/2" x 56 - 59"	70 1/2"	68 3/8"	56" - 59''	23 1/8" - 27 1/8"	33 7/8"	1/2"
139354	Incognito 8mm 56 3/4" x 56 - 59"	56 3/4"	54 5/8"	56" - 59''	23 1/8" - 27 1/8"	18 7/8"	1/2"

All dimensions are approximate. Structure measurements must be verified against the unit to ensure proper fit.

Incognito 74 Shower Doors - 8 mm

Material : Tempered Glass

Features

- 8mm tempered glass provides durability and safety
- Frame finish available in brushed nickel, chrome and matte black color to complement any bathroom decor
- Semi-frameless bypass shower door for alcove installation
- Easy, and intuitive parts on parts installation with up to 1/2 in. out of plumb adjustment
- Reversible for left or right-hand opening, giving you a flexible product for your bathroom needs
- The door catchers prevents the doors from opening unwantedly, which improves product watertight seal
- The unique handle features a large knob that allows an easier opening and closing of the door
- Integrated Anti-jump mechanism provides a smooth, effortless and quiet sliding operation for your shower
- Easy installation process saves time and hassle, making it a great DIY project

INCOGNITO 74 39-42 X 74 IN. 8MM SHOWER DOOR - 138520

SKU	Glass / Finish	Dimensions & Weight	Packaging	MSRP
138520-900-084-000	Clear / Chrome	39” - 42” x 74” / 95 lb	3.99 ft^3	$ 1055
138520-900-305-000	Clear / Brushed Nickel			$ 1124
138520-900-340-000	Clear / Matte Black			$ 1153

INCOGNITO 74 51-54 X 74 IN. 8MM SHOWER DOOR - 138521

SKU	Glass / Finish	Dimensions & Weight	Packaging	MSRP
138521-900-084-000	Clear / Chrome	51” - 54” x 74” / 95 lb	5.1 ft^3	$ 1143
138521-900-305-000	Clear / Brushed Nickel			$ 1213
138521-900-340-000	Clear / Matte Black			$ 1242

STANDARD

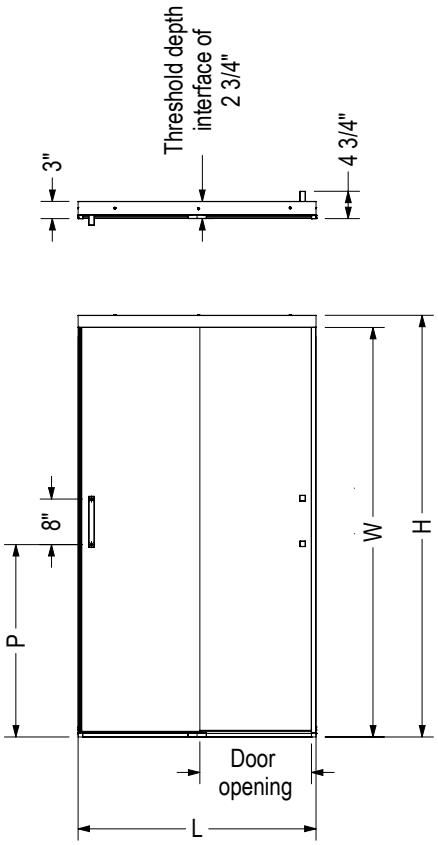

Code	Description	H	W	L Adjustable	Door opening	P	Wall adjustment
138520	Incognito 74" 39 - 42" x 74"	74"	71 7/8"	39" - 42"	16 1/2" - 19 1/2"	34 1/8"	1/2"
138521	Incognito 74" 51 - 54" x 74"	74"	68 3/8"	51" - 54"	22 1/2" - 25 1/2"	34 1/8"	1/2"
138522	Incognito 56 3/4" 51 - 54" x 56 3/4"	56 3/4"	54 5/8"	51" - 54"	22 1/2" - 25 1/2"	19 1/8"	1/2"

All dimensions are approximate. Structure measurement must be verified againtst the unit to ensure proper fit.

Incognito 76 Shaker Shower Doors

Material : Tempered Glass

Features

- 8mm tempered glass provides durability and safety
- Frameless bypass shower door for alcove installation
- Easy, and intuitive parts on parts installation with up to 1/2 in. out of plumb adjustment
- Reversible for left or right-hand opening, giving you a flexible product for your bathroom needs
- Convenient towel bar perfectly integrated in the glass design
- The unique handle features large knobs on the interior for easier opening and closing of the door
- The door catchers prevents the doors from opening unwantedly, which enhances product watertight seal
- Easy installation process saves time and hassle, perfect for any DIY project
- Integrated Anti-jump mechanism provides a smooth, effortless and quiet sliding operation for your shower

INCOGNITO 76 SHAKER 44-47 X 76 IN. 8MM SHOWER DOOR - 135331

SKU	Glass / Finish	Dimensions & Weight	Packaging	MSRP
135331-972-340-000	Shaker / Matte Black	44” - 47” x 76” / 106 lb	4.73 ft^3	$ 1384

INCOGNITO 76 SHAKER 56-59 X 76 IN. 8MM SHOWER DOOR - 135332

SKU	Glass / Finish	Dimensions & Weight	Packaging	MSRP
135332-972-340-000	Shaker / Matte Black	56” - 59” x 76” / 134 lb	5.47 ft^3	$ 1472

STANDARD

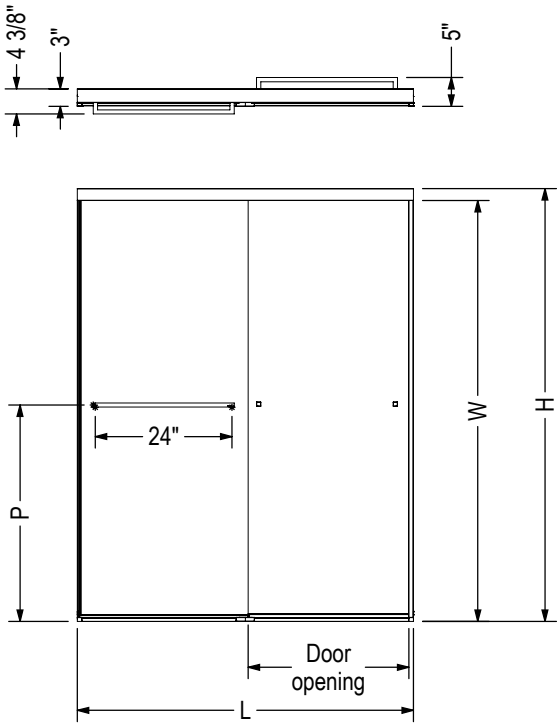

Code	Description	H	W	L Adjustable	Door opening	P	Wall adjustment
135331	Incognito 76 Shaker 8mm 76" x 44 - 47"	76"	73 7/8"	44" - 47"	18 1/4" - 22 1/4"	38"	1/2"
135332	Incognito 76 Shaker 8mm 76" x 56 - 59"	76"	73 7/8"	56" - 59"	24 1/4" - 28 1/4"	38"	1/2"
135330	Incognito Shaker 8mm 56 3/4" x 56 - 59"	56 3/4"	54 5/8"	56" - 59"	24 1/4" - 28 1/4"	28"	1/2"
135334	Incognito 76 8mm 76" x 44 - 47"	76"	73 7/8"	44" - 47"	18 1/4" - 22 1/4"	38"	1/2"
134335	Incognito 76 8mm 76" x 56 - 59"	76"	73 7/8"	56" - 59"	24 1/4" - 28 1/4"	38"	1/2"

All dimensions are approximate. Structure measurements must be verified against the unit to ensure proper fit.

Incognito 76 Shower Doors - 8 mm

Material : Tempered Glass

Features

- 8mm tempered glass provides durability and safety
- Frame finish available in brushed nickel, chrome and matte black color to complement any bathroom decor
- Semi-frameless bypass shower door for alcove installation
- Easy, and intuitive parts on parts installation with up to 1/2 in. out of plumb adjustment
- Reversible for left or right-hand opening, giving you a flexible product for your bathroom needs
- The door catchers prevents the doors from opening unwantedly, which improves product watertight seal
- The unique handle features a large knob that allows an easier opening and closing of the door
- Integrated Anti-jump mechanism provides a smooth, effortless and quiet sliding operation for your shower
- Easy installation process saves time and hassle, making it a great DIY project

INCOGNITO 76 44-47 X 76 IN. 8MM SHOWER DOOR - 135334

SKU	Glass / Finish	Dimensions & Weight	Packaging	MSRP
135334-900-084-000	Clear / Chrome	44” - 47” x 76” / 110 lb	4.73 ft^3	$ 1143
135334-900-305-000	Clear / Brushed Nickel			$ 1201
135334-900-340-000	Clear / Matte Black			$ 1230

INCOGNITO 76 56-59 X 76 IN. 8MM SHOWER DOOR - 135335

SKU	Glass / Finish	Dimensions & Weight	Packaging	MSRP
135335-900-084-000	Clear / Chrome	56” - 59” x 76” / 136 lb	5.47 ft^3	$ 1233
135335-900-305-000	Clear / Brushed Nickel			$ 1296
135335-900-340-000	Clear / Matte Black			$ 1326

STANDARD

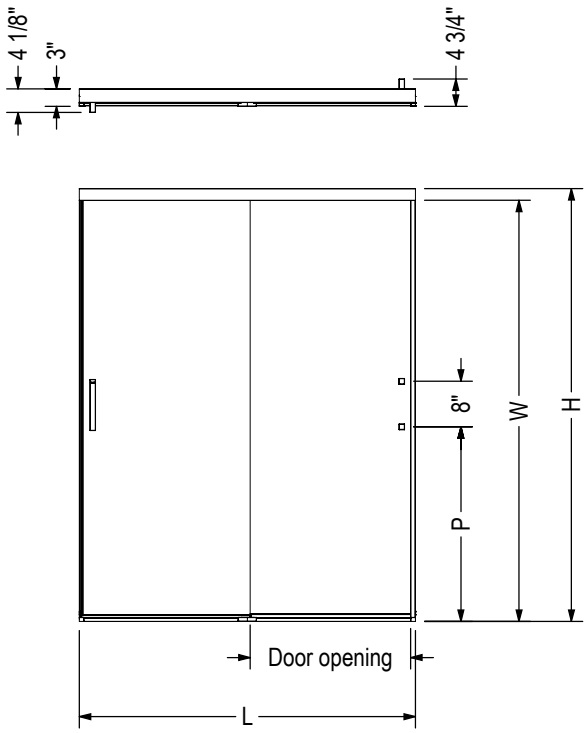

Code	Description	H	W	L Adjustable	Door opening	P	Wall adjustment
139354	Incognito 8mm 56 3/4" x 56 - 59"	56 3/4"	54 5/8"	56" - 59"	24 1/4" - 28 1/4"	18 7/8"	1/2"
135334	Incognito 8mm 76" x 44 - 47"	76"	73 7/8"	44" - 47"	18 1/4" - 22 1/4"	33 7/8"	1/2"
135335	Incognito 8mm 76" x 56 - 59"	76"	73 7/8"	56" - 59"	24 1/4" - 28 1/4"	33 7/8"	1/2"

All dimensions are approximate. Structure measurements must be verified against the unit to ensure proper fit.

Incognito 76 Smoke Shower Doors

Features

- Components that connect seamlessly for an effortless assembly
- Expandable Sill, no cutting required to adjust
- Large knob on the opposite side of the handle, to allows for an easier opening and closing
- Hand adjustment to perfect the fit in the alcove
- Integrated bumper at the top and the bottom
- Slim header and thin edges accentuate the minimalist look

INCOGNITO 76 SMOKE 56-59 X 76 - 8MM - 136335

SKU	Glass / Finish	Dimensions & Weight	Packaging	MSRP
136335-973-340-000	Dark Smoke / Matte Black	56” - 59” x 76” / 116 lb	4.88 ft^3	$ 1401
136335-975-340-000	Light Smoke / Matte Black			$ 1401

STANDARD

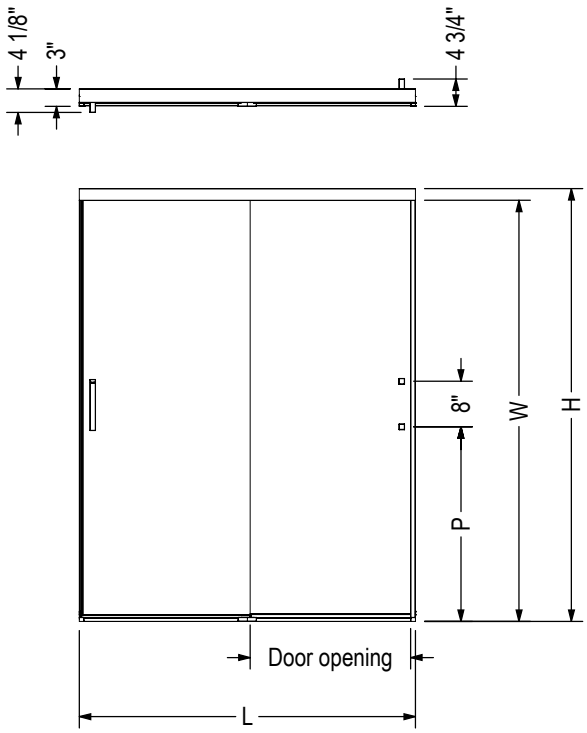

Code	Description	H	W	L Adjustable	Door opening	P	Wall adjustment
135335	Incognito Smoke 8mm 76" x 56 - 59"	76"	73 7/8"	56" - 59"	24 1/4" - 28 1/4"	33 7/8"	1/2"

All dimensions are approximate. Structure measurements must be verified against the unit to ensure proper fit.

Inverto Shower Doors

Material : Tempered Glass

Features

- Frameless clear glass panels 8mm (5/16-inch) thick
- Available in 3 finishes: Chrome, Brushed Nickel, Dark Bronze
- Bathub and tub shower are sold separately, explore our wide variety of Bathub and tub shower
- Bi-directional glass panels for flexible entry and easy access to fixtures on the left or right-hand side
- The door provides a watertight seal, to prevent leaks or spills during use
- Reversible, allowing for left or right opening to accommodate different bathroom layouts
- Silent guide that eliminates the rattling noise
- Improved safety features that lock the header and firmly secures frame to door jamb
- Warranty: 10 years

INVERTO 43-47 X 70 ½-74 - 8MM - 138761

SKU	Glass / Finish	Dimensions & Weight	Packaging	MSRP
138761-900-084-000	Clear / Chrome	43” - 47” x 74” / 111 lb	3.96 ft³	$ 1594
138761-900-173-000	Clear / Dark Bronze			$ 1832
138761-900-305-000	Clear / Brushed Nickel			$ 1706

INVERTO 56-59 X 70 ½-74 - 8MM - 138762

SKU	Glass / Finish	Dimensions & Weight	Packaging	MSRP
138762-900-084-000	Clear / Chrome	56” - 59” x 74” / 128 lb	4.84 ft³	$ 1620
138762-900-173-000	Clear / Dark Bronze			$ 1866
138762-900-305-000	Clear / Brushed Nickel			$ 1736

STANDARD

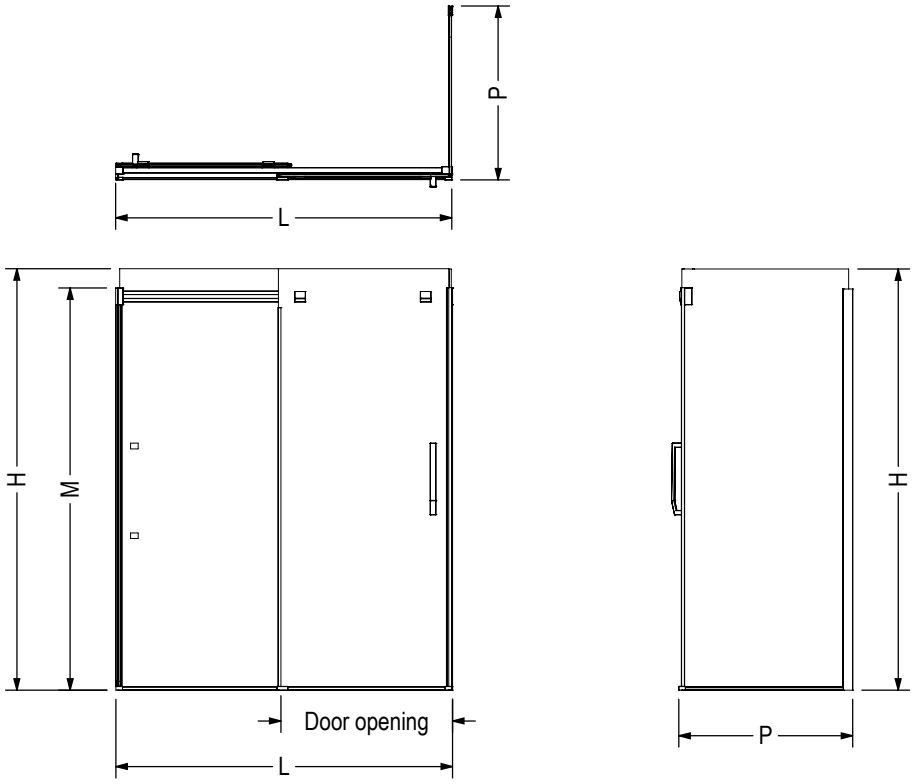

Code	Description	H	M	L Adjustable	P Adjustable	Door Opening	Wall Adjustment
138760	Inverto 56" - 59" x 55 1/2"	59"	55 1/2"	56" - 59"	-	24 1/2" - 27 1/2"	3/4"
138761	Inverto 44" - 47" x 70 1/2"	74"	70 1/2"	44" - 47"	-	18 1/2" - 21 1/2"	3/4"
138762	Inverto 56" - 59" x 70 1/2"	74"	70 1/2"	56" - 59"	-	24 1/2" - 27 1/2"	3/4"
137310	Return Panel 32"	74"	70 1/2"	-	30 1/4" - 31"	-	3/4"
137312	Return Panel 34"	74"	70 1/2"	-	32 1/4" - 33"	-	3/4"
137311	Return Panel 36"	74"	70 1/2"	-	34 1/4" - 35"	-	3/4"

Toutes ces dimensions sont approximatives. Afin d'assurer une installation parfaite, les dimensions de la structure doivent être vérifiées à partir de l'unité.

Go to Table of Contents

Polar Shower Doors

Material : Tempered Glass

Features

- Raindrop 4 mm tempered glass for more intimacy
- Chrome frame for a clean simple look
- Shower sold separately, explore our wide variety of showers and shower bases
- Bypass door configuration features two sliding panels
- The EZ Kleen bottom track drains water away and significantly reduces maintenance
- Reversible, allowing for left or right opening to accommodate different bathroom layouts
- Smooth sliding door functionality enhances accessibility and convenience while elevating the aesthetics of your shower space
- Proudly made in Canada
- Warranty: 10 years

POLAR 54-59 ½ X 68 IN. - 105412

SKU	Glass / Finish	Dimensions & Weight	Packaging	MSRP
105412-970-084-000	Raindrop / Chrome	54” - 59 1/2” x 68” / 68 lb	4.59 ft^3	$ 866

POLAR 42-47 ½ X 68 IN. - 105413

SKU	Glass / Finish	Dimensions & Weight	Packaging	MSRP
105413-970-084-000	Raindrop / Chrome	42” - 47 1/2” x 68” / 53 lb	4.86 ft^3	$ 808

Revelation Round Shower Doors - 6 mm

Material : Tempered Glass

Features

› - Made from high-quality 6 mm (1/4") thick glass, ensuring durability and safety. - Reversible, allowing installation for left or right openings to accommodate different bathroom layouts. - Easy installation process saves time and hassle. -The door provides a watertight seal, ensuring no leaks or spills occur during use.

REVELATION ROUND 44-47 X 70 1/2-73 - 136690

SKU	Glass / Finish	Dimensions & Weight	Packaging	MSRP
136690-900-084-000	Clear / Chrome	44" - 47" x 73" / 82 lb	3.94 ft^3	$ 1001
136690-900-305-000	Clear / Brushed Nickel			$ 1068
136690-900-340-000	Clear / Matte Black			$ 1104

REVELATION ROUND 56-59 X 70 ½-73 IN 6MM - 136691

SKU	Glass / Finish	Dimensions & Weight	Packaging	MSRP
136691-900-084-000	Clear / Chrome	56" - 59" x 73" / 105 lb	4.56 ft^3	$ 1087
136691-900-305-000	Clear / Brushed Nickel			$ 1159
136691-900-340-000	Clear / Matte Black			$ 1191

STANDARD

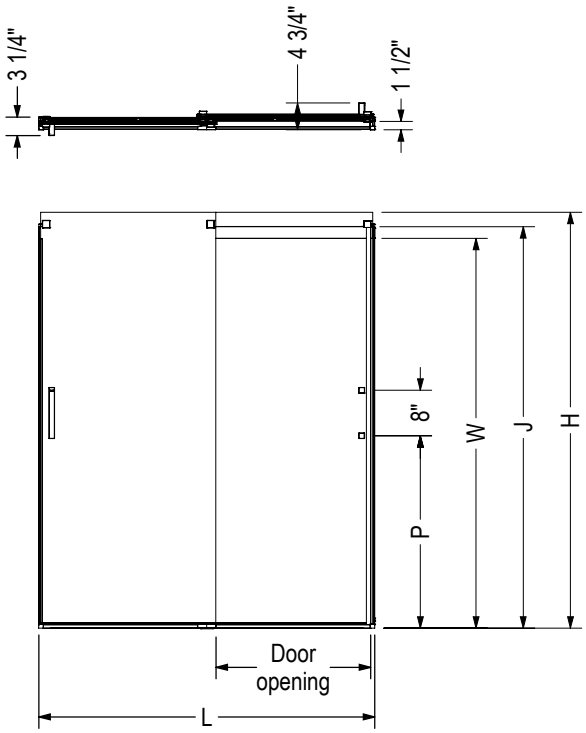

Code	Description	H	J	W	L Adjustable	Door Opening	P	Wall adjustment
134690	Revelation SQ 6mm 70 1/2"-73" x 43 - 47"	73"	70 1/2"	68 3/8"	43" - 47''	16" - 20"	33 7/8"	1/2"
134691	Revelation SQ 6mm 70 1/2"-73" x 55 - 59"	73"	70 1/2"	68 3/8"	55" - 59''	22" - 26"	33 7/8"	1/2"
134692	Revelation SQ 6mm 56 3/4"-59 1/4" x 55 - 59"	59 1/4"	56 3/4"	54 5/8"	55" - 59''	22" - 26"	18 7/8"	1/2"
134693	Revelation SQ 8mm 70 1/2"-73" x 43 - 47"	73"	70 1/2"	68 3/8"	43" - 47''	16" - 20"	33 7/8"	1/2"
134694	Revelation SQ 8mm 70 1/2"-73" x 55 - 59"	73"	70 1/2"	68 3/8"	55" - 59''	22" - 26"	33 7/8"	1/2"
134695	Revelation SQ 8mm 56 3/4"-59 1/4" x 55 - 59"	59 1/4"	56 3/4"	54 5/8"	55" - 59''	22" - 26"	18 7/8"	1/2"

All dimensions are approximate. Structure measurements must be verified against the unit to ensure proper fit.

Revelation Round Shower Doors - 8 mm

Material : Tempered Glass

Features

- Frameless Bypass Shower door for Alcove Installation
- Made from high-quality 8mm (5/16") thick glass, ensuring durability and safety.
- The smooth and effortless sliding mechanism allows for easy access to the shower.
- Reversible, allowing installation for left or right opening to accommodate different bathroom layouts.
- The rounded handle adds a unique touch to your bathroom, making it stand out from other shower doors.
- Wheel catcher maintains water retention
- Easy installation process saves time and hassle.
- The aluminum hardware is rust-resistant and long-lasting, ensuring the door will remain functional and beautiful for years to come.
- The clear glass allows for a bright and airy shower space, creating a refreshing and relaxing environment.

REVELATION ROUND 44-47 X 70 ½-73 - 8MM - 136693

SKU	Glass / Finish	Dimensions & Weight	Packaging	MSRP
136693-900-084-000	Clear / Chrome	44" - 47" x 73" / 110 lb	3.94 ft³	$ 1110
136693-900-305-000	Clear / Brushed Nickel			$ 1179
136693-900-340-000	Clear / Matte Black			$ 1213

REVELATION ROUND 56-59 X 70 ½-73 - 8MM - 136694

SKU	Glass / Finish	Dimensions & Weight	Packaging	MSRP
136694-900-084-000	Clear / Chrome	56" - 59" x 73" / 134 lb	4.68 ft³	$ 1198
136694-900-305-000	Clear / Brushed Nickel			$ 1268
136694-900-340-000	Clear / Matte Black			$ 1301

STANDARD

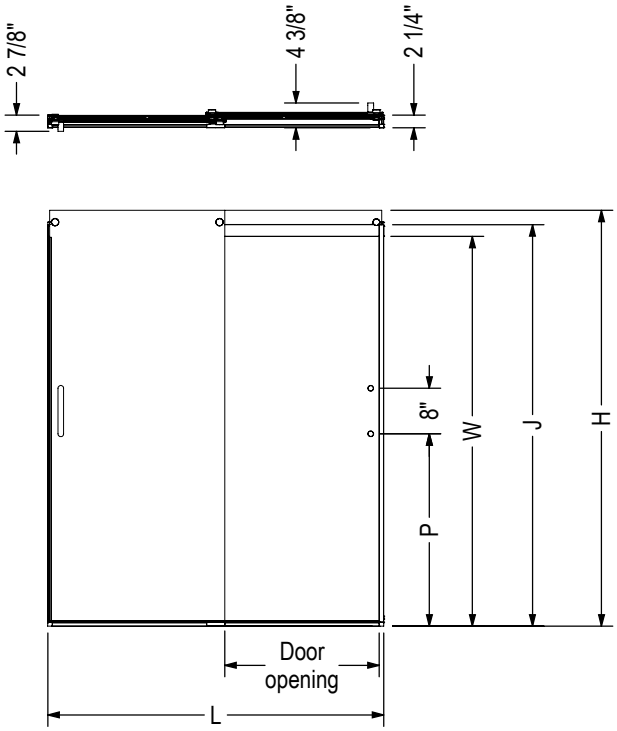

Code	Description	H	J	W	L Adjustable	Door Opening	P	Wall adjustment
139690	Revelation 6mm 70 1/2"-73" x 43 - 47"	73"	70 1/2"	68 3/8"	43" - 47"	16" - 20"	33 7/8"	1/2"
139691	Revelation 6mm 70 1/2"-73" x 55 - 59"	73"	70 1/2"	68 3/8"	55" - 59"	22" - 26"	33 7/8"	1/2"
139692	Revelation 6mm 56 3/4"-59 1/4" x 55 - 59"	59 1/4"	56 3/4"	54 5/8"	55" - 59"	22" - 26"	18 7/8"	1/2"
139693	Revelation 8mm 70 1/2"-73" x 43 - 47"	73"	70 1/2"	68 3/8"	43" - 47"	16" - 20"	33 7/8"	1/2"
139694	Revelation 8mm 70 1/2"-73" x 55 - 59"	73"	70 1/2"	68 3/8"	55" - 59"	22" - 26"	33 7/8"	1/2"
139695	Revelation 8mm 56 3/4"-59 1/4" x 55 - 59"	59 1/4"	56 3/4"	54 5/8"	55" - 59"	22" - 26"	18 7/8"	1/2"

All dimensions are approximate. Structure measurements must be verified against the unit to ensure proper fit.

Revelation Square Shower Doors - 6 mm

Material : Tempered Glass

Features

- Frameless Bypass Shower door for Alcove Installation
- Made from high-quality 6 mm (1/4") thick glass, ensuring durability and safety.
- The smooth and effortless sliding mechanism allows for easy access to the shower.
- Reversible, allowing installation for left or right opening to accommodate different bathroom layouts.
- Square chrome handle and hardware for a modern and stylish appearance
- Wheel catcher maintains water retention
- Easy installation process saves time and hassle.
- The aluminum hardware is rust-resistant and long-lasting, ensuring the door will remain functional and beautiful for years to come.
- The clear glass allows for a bright and airy shower space, creating a refreshing and relaxing environment.

REVELATION SQUARE 44-47 X 70 ½-73 - 6MM - 135690

SKU	Glass / Finish	Dimensions & Weight	Packaging	MSRP
135690-900-084-000	Clear / Chrome	44" - 47" x 73" / 82 lb	3.94 ft³	$ 1001
135690-900-305-000	Clear / Brushed Nickel			$ 1068
135690-900-340-000	Clear / Matte Black			$ 1104

REVELATION SQUARE 56-59 X 70 ½-73 - 6MM - 135691

SKU	Glass / Finish	Dimensions & Weight	Packaging	MSRP
135691-900-084-000	Clear / Chrome	56" - 59" x 73" / 105 lb	4.56 ft³	$ 1087
135691-900-305-000	Clear / Brushed Nickel			$ 1159
135691-900-340-000	Clear / Matte Black			$ 1191

STANDARD

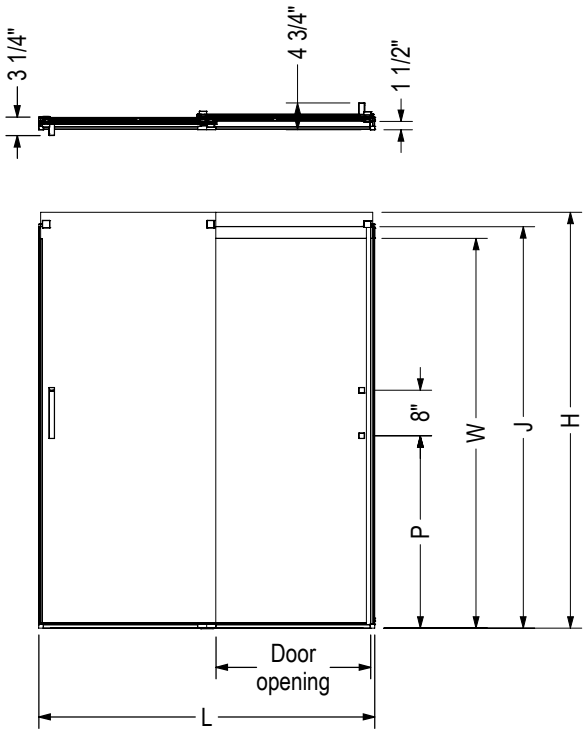

Code	Description	H	J	W	L Adjustable	Door Opening	P	Wall adjustment
134690	Revelation SQ 6mm 70 1/2"-73" x 43 - 47"	73"	70 1/2"	68 3/8"	43" - 47''	16" - 20"	33 7/8"	1/2"
134691	Revelation SQ 6mm 70 1/2"-73" x 55 - 59"	73"	70 1/2"	68 3/8"	55" - 59''	22" - 26"	33 7/8"	1/2"
134692	Revelation SQ 6mm 56 3/4"-59 1/4" x 55 - 59"	59 1/4"	56 3/4"	54 5/8"	55" - 59''	22" - 26"	18 7/8"	1/2"
134693	Revelation SQ 8mm 70 1/2"-73" x 43 - 47"	73"	70 1/2"	68 3/8"	43" - 47''	16" - 20"	33 7/8"	1/2"
134694	Revelation SQ 8mm 70 1/2"-73" x 55 - 59"	73"	70 1/2"	68 3/8"	55" - 59''	22" - 26"	33 7/8"	1/2"
134695	Revelation SQ 8mm 56 3/4"-59 1/4" x 55 - 59"	59 1/4"	56 3/4"	54 5/8"	55" - 59''	22" - 26"	18 7/8"	1/2"

All dimensions are approximate. Structure measurements must be verified against the unit to ensure proper fit.

Revelation Square Shower Doors - 8 mm

Material : Tempered Glass

Features

- Frameless Bypass Shower door for Alcove Installation
- Made from high-quality 6 mm (1/4") thick glass, ensuring durability and safety.
- The smooth and effortless sliding mechanism allows for easy access to the shower.
- Reversible, allowing installation for left or right opening to accommodate different bathroom layouts.
- Square chrome handle and hardware for a modern and stylish appearance
- Wheel catcher maintains water retention
- Easy installation process saves time and hassle.
- The aluminum hardware is rust-resistant and long-lasting, ensuring the door will remain functional and beautiful for years to come.
- The clear glass allows for a bright and airy shower space, creating a refreshing and relaxing environment.

REVELATION SQUARE 44-47 X 70 ½-73 - 8MM - 135693

SKU	Glass / Finish	Dimensions & Weight	Packaging	MSRP
135693-900-084-000	Clear / Chrome	44" - 47" x 73" / 110 lb	3.94 ft³	$ 1110
135693-900-305-000	Clear / Brushed Nickel			$ 1179
135693-900-340-000	Clear / Matte Black			$ 1213

REVELATION SQUARE 56-59 X 70 ½-73 - 8MM - 135694

SKU	Glass / Finish	Dimensions & Weight	Packaging	MSRP
135694-900-084-000	Clear / Chrome	56" - 59" x 73" / 134 lb	4.68 ft³	$ 1198
135694-900-305-000	Clear / Brushed Nickel			$ 1268
135694-900-340-000	Clear / Matte Black			$ 1301

STANDARD

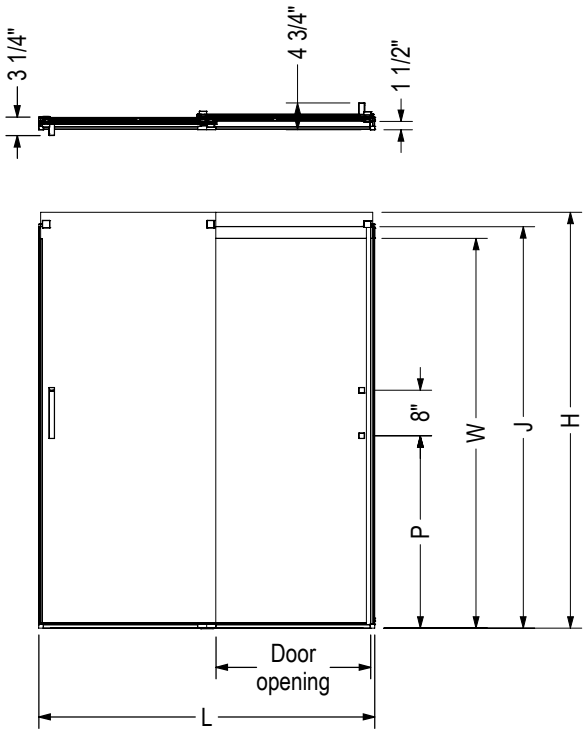

Code	Description	H	J	W	L Adjustable	Door Opening	P	Wall adjustment
134690	Revelation SQ 6mm 70 1/2"-73" x 43 - 47"	73"	70 1/2"	68 3/8"	43" - 47''	16" - 20"	33 7/8"	1/2"
134691	Revelation SQ 6mm 70 1/2"-73" x 55 - 59"	73"	70 1/2"	68 3/8"	55" - 59''	22" - 26"	33 7/8"	1/2"
134692	Revelation SQ 6mm 56 3/4"-59 1/4" x 55 - 59"	59 1/4"	56 3/4"	54 5/8"	55" - 59''	22" - 26"	18 7/8"	1/2"
134693	Revelation SQ 8mm 70 1/2"-73" x 43 - 47"	73"	70 1/2"	68 3/8"	43" - 47''	16" - 20"	33 7/8"	1/2"
134694	Revelation SQ 8mm 70 1/2"-73" x 55 - 59"	73"	70 1/2"	68 3/8"	55" - 59''	22" - 26"	33 7/8"	1/2"
134695	Revelation SQ 8mm 56 3/4"-59 1/4" x 55 - 59"	59 1/4"	56 3/4"	54 5/8"	55" - 59''	22" - 26"	18 7/8"	1/2"

All dimensions are approximate. Structure measurements must be verified against the unit to ensure proper fit.

Uptown Shower Doors

Material : Tempered Glass

Features

UPTOWN 44-47 X 76 IN. 8 MM - 135321				
SKU	**Glass / Finish**	**Dimensions & Weight**	**Packaging**	**MSRP**
135321-900-084-000	Clear / Chrome	44” - 47” x 76” / 112 lb	5.63 ft^3	$ 1547
135321-900-305-000	Clear / Brushed Nickel			$ 1629
135321-900-340-000	Clear / Matte Black			$ 1661

UPTOWN 56-59 X 76 IN. 8 MM - 135322				
SKU	**Glass / Finish**	**Dimensions & Weight**	**Packaging**	**MSRP**
135322-900-084-000	Clear / Chrome	56” - 59” x 76” / 138 lb	6.12 ft^3	$ 1642
135322-900-305-000	Clear / Brushed Nickel			$ 1723
135322-900-340-000	Clear / Matte Black			$ 1765

STANDARD

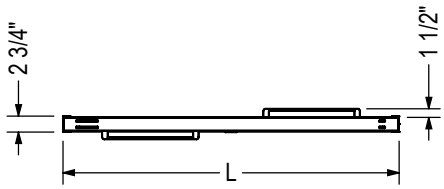

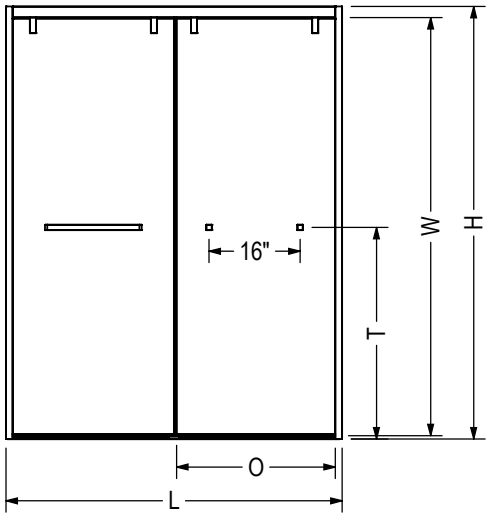

Code	Description	H	L	O	T	W
135320	Uptown Bypass Tub door 58" x 56" - 59"	58"	56" - 59"	24 7/8" - 27 7/8"	28 1/4"	55 1/2"
135321	Uptown Bypass door 76" x 44" - 47"	76"	44" - 47"	18 7/8" - 21 7/8"	37 1/8"	73 1/2"
135322	Uptown Bypass door 76" x 56" - 59"	76"	56" - 59"	24 7/8" - 27 7/8"	37 1/8"	73 1/2"

Wall adjusment = 3/8"

All dimensions are approximate. Structure measurements must be verified against the unit to ensure proper fit.

Nebula Shower Doors

Material : Tempered Glass

Features

- Unique contemporary barn door look with a minimalist design
- Slim stainless header with 18 in. handle
- Available in 3 stylish finishes: Chrome, Brushed Nickel and Matte Black
- 78 3/4” high clear glass panel
- 8 mm (5/16”) tempered glass with Lotus easy clean protection
- Detachable door guide to distance the glass when cleaning
- Reversible shower door for left or right opening
- Available in a corner configuration with a Nebula return panel

NEBULA 44 ½-46 ½ X 78 ¾ - 8MM - 135870

SKU	Glass / Finish	Dimensions & Weight	Packaging	MSRP
135870-900-084-000	Clear / Chrome	44 1/2” - 46 1/2” x 78 3/4” / 124 lb	5.75 ft^3	$ 1417
135870-900-305-000	Clear / Brushed Nickel			$ 1472
135870-900-340-000	Clear / Matte Black			$ 1522

NEBULA 56 ½-58 ½ X 78 ¾ - 8MM - 135875

SKU	Glass / Finish	Dimensions & Weight	Packaging	MSRP
135875-900-084-000	Clear / Chrome	56 1/2” - 58 1/2” x 78 3/4” / 154 lb	7.19 ft^3	$ 1543
135875-900-305-000	Clear / Brushed Nickel			$ 1600
135875-900-340-000	Clear / Matte Black			$ 1656

STANDARD

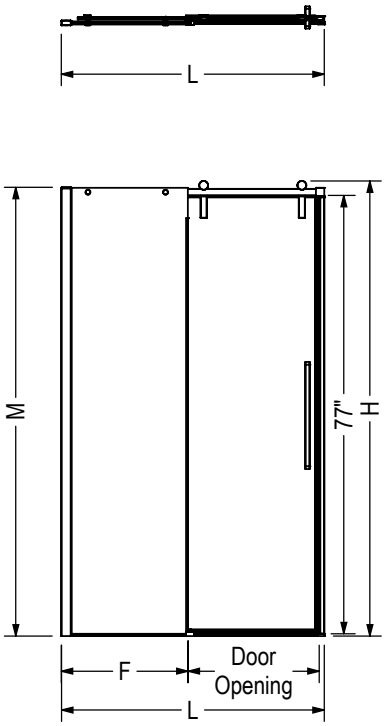

Code	Description	H	M	L Adjustable	F	Door Opening	Wall Adjustment
135870	Nebula 44 1/2" x 46 1/2" x 78 3/4"	80"	78 3/4"	44 1/2" - 46 1/2"	21 1/2"	17 1/8" - 19 1/8"	3/4"
135875	Nebula 56 1/2" x 58 1/2" x 78 3/4"	80"	78 3/4"	56 1/2" - 58 1/2"	27 1/2"	23 1/8" - 25 1/8"	3/4"

All dimensions are approximate. Structure measurements must be verified against the unit to ensure proper fit.

Vela Shower Doors

Material : Tempered Glass

Features

- Rollers and handle offered in 7 different finishes (monochrome or mix-finishes)
- 78 3/4" high clear glass panel 8 mm (5/16") tempered glass with Lotus easy clean protection
- Detachable door guide to distance the glass when cleaning
- Reversible shower door for left or right opening
- Also available in a corner configuration with a HALO return panel
- This configuration is shipped in 2 boxes

VELA 44 ½-47 X 78 ¾ - 8MM - 138460

SKU	Glass / Finish	Dimensions & Weight	Packaging	MSRP
138460-900-084-000	Clear / Chrome	44 1/2" - 47" x 78 3/4" / 130 lb	9.98 ft³	$ 1615
138460-900-280-000	Clear / Chrome and Matte White			$ 1978
138460-900-305-000	Clear / Brushed Nickel			$ 1683
138460-900-340-000	Clear / Matte Black			$ 1751
138460-900-350-000	Clear / Chrome and Matte Black			$ 1683
138460-900-360-000	Clear / Matte Black and Chrome			$ 1751
138460-900-370-000	Clear / Matte Black and Brushed Nickel			$ 1751
138460-900-380-000	Clear / Matte Black and Brushed Gold			$ 1855

VELA 56 ½-59 X 78 ¾ - 8MM - 138470

SKU	Glass / Finish	Dimensions & Weight	Packaging	MSRP
138470-900-084-000	Clear / Chrome	56 1/2" - 59" x 78 3/4" / 156 lb	11.58 ft³	$ 1751
138470-900-280-000	Clear / Chrome and Matte White			$ 2140
138470-900-305-000	Clear / Brushed Nickel			$ 1818
138470-900-340-000	Clear / Matte Black			$ 1818
138470-900-350-000	Clear / Chrome and Matte Black			$ 1818
138470-900-360-000	Clear / Matte Black and Chrome			$ 1847
138470-900-370-000	Clear / Matte Black and Brushed Nickel			$ 1847
138470-900-380-000	Clear / Matte Black and Brushed Gold			$ 1922

ACCESSORIES

SKU	Description	MSRP
10060311	Corner glass shelf (9 3/8 x 9 3/8 in.) (sold separately) 10 mm frosted glass with a clear band along the edge Compatible with Utile and tile shower walls	$ 174

STANDARD

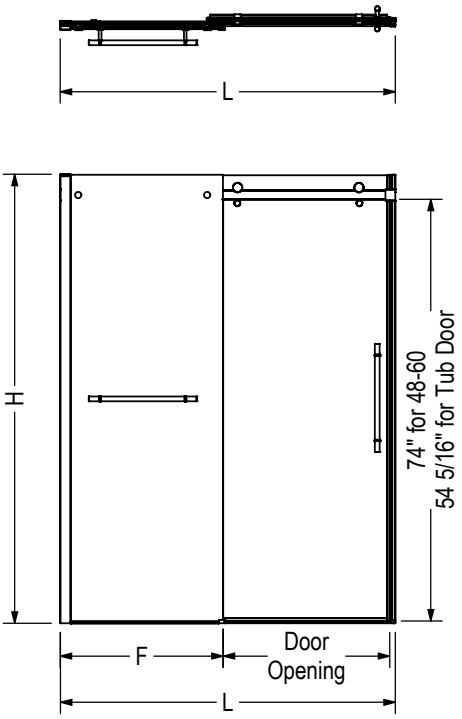

Code	Description	H	L Adjustable	F	Door Opening	Wall Adjustment
138460	Vela 78 3/4" x 47" without towel bar	78 3/4"	44 1/2" - 47"	22 1/2"	16 1/4" - 18 3/4"	1"
138465	Vela 78 3/4" x 47" with towel bar	78 3/4"	44 1/2" - 47"	22 1/2"	16 1/4" - 18 3/4"	1"
138470	Vela 78 3/4" x 59" without towel bar	78 3/4"	56 1/2" - 59"	28 5/8"	22 1/8" - 24 5/8"	1"
138475	Vela 78 3/4" x 59" with towel bar	78 3/4"	56 1/2" - 59"	28 5/8"	22 1/8" - 24 5/8"	1"
138480	Vela 59" x 59" without towel bar	59"	56 1/2" - 59"	28 5/8"	22 1/8" - 24 5/8"	1"
138485	Vela 59" x 59" with towel bar	59"	56 1/2" - 59"	28 5/8"	22 1/8" - 24 5/8"	1"

All dimensions are approximate. Structure measurements must be verified against the unit to ensure proper fit.

Go to Table of Contents

Vela Shower Doors with Towel Bar

Material : Tempered Glass

Features

- Rollers and handle offered in 7 different finishes (monochrome or mix-finishes)
- 78 3/4” high clear glass panel 8 mm (5/16”) tempered glass with Lotus easy clean protection
- Detachable door guide to distance the glass when cleaning
- Reversible shower door for left or right opening
- Also available in a corner configuration with a HALO return panel
- This configuration is shipped in 2 boxes
- With a convenient towel bar on the fix panel

VELA 44 ½-47 X 78 ¾ - 8MM - 138465

SKU	Glass / Finish	Dimensions & Weight	Packaging	MSRP
138465-900-084-000	Clear / Chrome	44 1/2” - 47” x 78 3/4” / 130 lb	9.98 ft^3	$ 1718
138465-900-280-000	Clear / Chrome and Matte White			$ 2099
138465-900-305-000	Clear / Brushed Nickel			$ 1785
138465-900-340-000	Clear / Matte Black			$ 1855
138465-900-350-000	Clear / Chrome and Matte Black			$ 1785
138465-900-360-000	Clear / Matte Black and Chrome			$ 1855
138465-900-370-000	Clear / Matte Black and Brushed Nickel			$ 1855
138465-900-380-000	Clear / Matte Black and Brushed Gold			$ 1956

VELA 56 ½-59 X 78 ¾ - 8MM - 138475

SKU	Glass / Finish	Dimensions & Weight	Packaging	MSRP
138475-900-084-000	Clear / Chrome	56 1/2” - 59” x 78 3/4” / 156 lb	11.58 ft^3	$ 1855
138475-900-280-000	Clear / Chrome and Matte White			$ 2260
138475-900-305-000	Clear / Brushed Nickel			$ 1922
138475-900-340-000	Clear / Matte Black			$ 1922
138475-900-350-000	Clear / Chrome and Matte Black			$ 1922
138475-900-360-000	Clear / Matte Black and Chrome			$ 1949
138475-900-370-000	Clear / Matte Black and Brushed Nickel			$ 1949
138475-900-380-000	Clear / Matte Black and Brushed Gold			$ 2024

ACCESSORIES

SKU	Description	MSRP
10060311	Corner glass shelf (9 3/8 x 9 3/8 in.) (sold separately) 10 mm frosted glass with a clear band along the edge Compatible with Utile and tile shower walls	$ 174

STANDARD

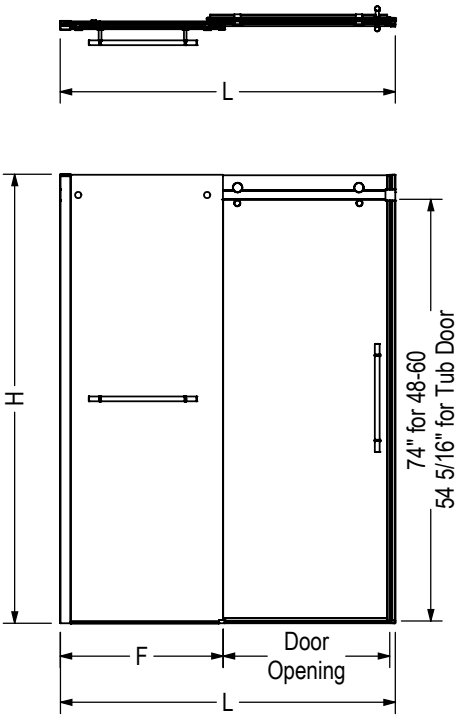

Code	Description	H	L Adjustable	F	Door Opening	Wall Adjustment
138460	Vela 78 3/4" x 47" without towel bar	78 3/4"	44 1/2" - 47"	22 1/2"	16 1/4" - 18 3/4"	1"
138465	Vela 78 3/4" x 47" with towel bar	78 3/4"	44 1/2" - 47"	22 1/2"	16 1/4" - 18 3/4"	1"
138470	Vela 78 3/4" x 59" without towel bar	78 3/4"	56 1/2" - 59"	28 5/8"	22 1/8" - 24 5/8"	1"
138475	Vela 78 3/4" x 59" with towel bar	78 3/4"	56 1/2" - 59"	28 5/8"	22 1/8" - 24 5/8"	1"
138480	Vela 59" x 59" without towel bar	59"	56 1/2" - 59"	28 5/8"	22 1/8" - 24 5/8"	1"
138485	Vela 59" x 59" with towel bar	59"	56 1/2" - 59"	28 5/8"	22 1/8" - 24 5/8"	1"

All dimensions are approximate. Structure measurements must be verified against the unit to ensure proper fit.

Connect Pro Shower Doors

Material : Tempered Glass

Features

- Configuration consists of a Stationary Panel and Sliding Door
- For corner or alcove showers and for tile or pre-cast wall installations 76" and higher, we suggest Connect Pro doors.
- Requires no cutting the door frame expands to adjust to the walls
- Glass panels come with the Lotus Easy Clean Glass Protection to repel soap and water stains for carefree maintenance
- Designed in North America
- Solid expandable frame that provides 1.5 in. adjustment with ClickConnect corner joint
- Fast, no-cut installation
- Reversible door for easy left -or right- opening installation

CONNECT PRO 43 ½-45 X 76 - 6MM - 135235

SKU	Glass / Finish	Dimensions & Weight	Packaging	MSRP
135235-900-084-000	Clear / Chrome	43 1/2" - 45" x 76" / 78 lb	14.28 ft^3	$ 1140

CONNECT PRO 45-46 ½ X 76 - 6MM - 135236

SKU	Glass / Finish	Dimensions & Weight	Packaging	MSRP
135236-900-084-000	Clear / Chrome	45" - 46 1/2" x 76" / 82 lb	152 ft^3	$ 1140
135236-900-340-000	Clear / Matte Black			$ 1254

CONNECT PRO 57-58 ½ X 76 - 6MM - 135238

SKU	Glass / Finish	Dimensions & Weight	Packaging	MSRP
135238-900-084-000	Clear / Chrome	57" - 58 1/2" x 76" / 101 lb	18.48 ft^3	$ 1213
135238-900-340-000	Clear / Matte Black			$ 1334

ACCESSORIES

SKU	Description	MSRP
10041135-084	Connect PRO Shower Door Filler Available finishes: Chrome **(084)**, Brushed Nickel **(305)** and Matte Black **(340)**	$ 109
10041135-305		$ 120
10041135-340		$ 120

STANDARD

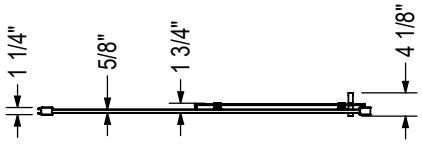

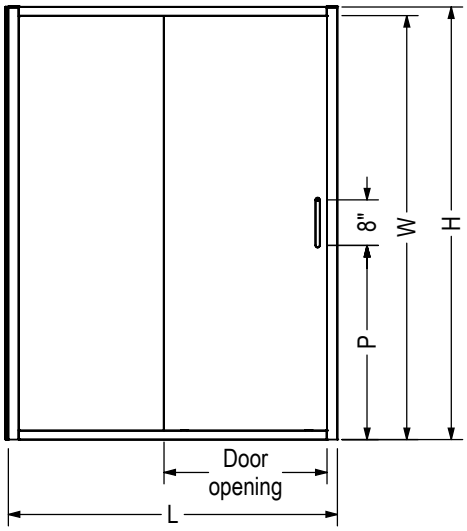

Code	Description	H	W	L Adjustable	Door opening	P
135235	Connect Pro 76" x 43 1/2" - 45"	76"	74 3/8"	43 1/2" - 45"	17 13/16" - 18 9/16"	34 1/8"
135236	Connect Pro 76" x 45" - 46 1/2"	76"	74 3/8"	45" - 46 1/2"	18 9/16" - 19 5/16"	34 1/8"
135237	Connect Pro 76" x 55 1/2" - 57"	76"	74 3/8"	55 1/2" - 57"	23 13/16" - 24 9/16"	34 1/8"
135238	Connect Pro 76" x 57" - 58 1/2"	76"	74 3/8"	57" - 58 1/2"	24 9/16" - 25 5/16"	34 1/8"

All dimensions are approximate. Structure measurements must be verified against the unit to ensure proper fit.

Halo Pro GS Shower Doors

Material : Tempered Glass

Features

- 8 mm tempered glass panels with MAAX new Shatter-Resistant Technology, GlassShield®
- Available in 2 finishes: Chrome and Matte Black
- Halo Pro is specifically designed for the trained installer in mind
- Sliding door configuration features one sliding glass panel and one stationary panel
- The door provides a watertight seal, ensuring no leaks or spills occur during use
- Reversible, allowing for left or right opening to accommodate different bathroom layouts
- For a corner shower: combine a Halo return panel and an Halo Pro alcove door
- Glass panels come with the Lotus Easy Clean Glass Protection to repel soap and water stains for carefree maintenance
- Compatible with MAAX's full line of shower bases and walls, making it a versatile addition to any bathroom, validate all dimensions and measure on site before your final selection.

HALO PRO GS 44 1/2-47 X 78 3/4 - 8MM - 138540

SKU	Glass / Finish	Dimensions & Weight	Packaging	MSRP
138540-810-084-000	Clear with GlassShield / Chrome	44 1/2" - 47" x 78 3/4" / 110 lb	8.66 ft^3	$ 1573
138540-810-340-000	Clear with GlassShield / Matte Black			$ 1678

HALO PRO GS 56 1/2-59 X 78 3/4 - 8MM - 138541

SKU	Glass / Finish	Dimensions & Weight	Packaging	MSRP
138541-810-084-000	Clear with GlassShield / Chrome	56 1/2" - 59" x 78 3/4" / 138 lb	10.69 ft^3	$ 1707
138541-810-340-000	Clear with GlassShield / Matte Black			$ 1824

STANDARD

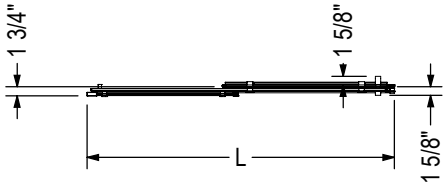

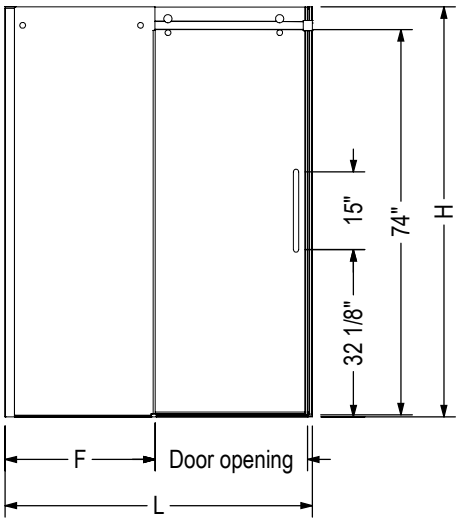

Code	Description	H	L Adjustable	F	P Adjustable	Door Opening	Wall Adjustment
136540	Halo Pro GS 78 3/4" x 47"	78 3/4"	44 1/2" - 47"	22 1/2"	-	16 1/4" - 18 3/4"	1"
136541	Halo Pro GS 78 3/4" x 59"	78 3/4"	56 1/2" - 59"	28 5/8"	-	22 1/8" - 24 5/8"	1"

All dimensions are approximate. Structure measurements must be verified against the unit to ensure proper fit.

Halo Pro Shower Doors

Material : Tempered Glass

Features

- 8 mm tempered glass panels
- Available in 2 finishes: Chrome and Matte Black
- Halo Pro is specifically designed for the trained installer in mind
- Sliding door configuration features one sliding glass panel and one stationary panel
- The door provides a watertight seal, ensuring no leaks or spills occur during use
- Reversible, allowing for left or right opening to accommodate different bathroom layouts
- For a corner shower: combine a Halo return panel and an Halo Pro alcove door
- Glass panels come with the Lotus Easy Clean Glass Protection to repel soap and water stains for carefree maintenance
- Compatible with MAAX's full line of shower bases and walls, making it a versatile addition to any bathroom, validate all dimensions and measure on site before your final selection.

HALO PRO 44 ½-47 X 78 ¾ - 8MM - 138950

SKU	Glass / Finish	Dimensions & Weight	Packaging	MSRP
138950-900-084-000	Clear / Chrome	44 1/2” - 47” x 78 3/4” / 109 lb	8.3 ft^3	$ 1396
138950-900-340-000	Clear / Matte Black			$ 1501

HALO PRO 56 ½-59 X 78 ¾ - 8MM - 138952

SKU	Glass / Finish	Dimensions & Weight	Packaging	MSRP
138952-900-084-000	Clear / Chrome	56 1/2” - 59” x 78 3/4” / 123 lb	8.42 ft^3	$ 1532
138952-900-340-000	Clear / Matte Black			$ 1648

ACCESSORIES

SKU	Description	MSRP
10060311	Corner glass shelf (9 3/8 x 9 3/8 in.) (sold separately) 10 mm frosted glass with a clear band along the edge Compatible with Utile and tile shower walls	$ 174

STANDARD

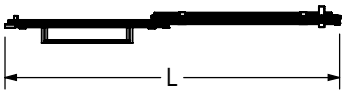

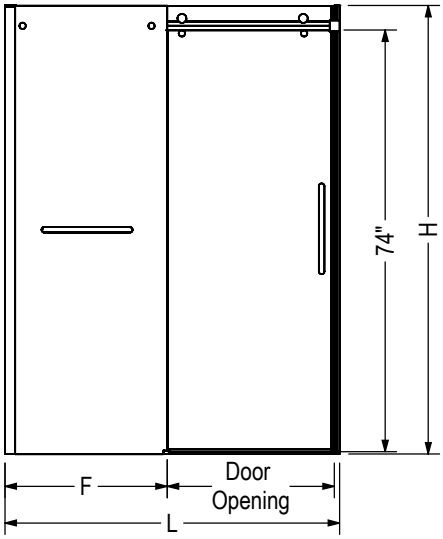

Code	Description	H	L Adjustable	F	Door Opening	Wall Adjustment
138950	Halo Pro 78 3/4" x 47" without Towel bar	78 3/4"	44 1/2" - 47"	22 1/2"	16 1/4" - 18 3/4"	1"
138954	Halo Pro 78 3/4" x 47" with Towel bar	78 3/4"	44 1/2" - 47"	22 1/2"	16 1/4" - 18 3/4"	1"
138952	Halo Pro 78 3/4" x 59" without Towel bar	78 3/4"	56 1/2" - 59"	28 5/8"	22 1/8" - 24 5/8"	1"
138956	Halo Pro 78 3/4" x 59" with Towel bar	78 3/4"	56 1/2" - 59"	28 5/8"	22 1/8" - 24 5/8"	1"

All dimensions are approximate. Structure measurements must be verified against the unit to ensure proper fit.

Halo Pro TB Shower Doors

Material : Tempered Glass

Features

- 8 mm tempered glass panels
- Available in 2 finishes: Chrome and Matte Black
- Halo Pro is specifically designed for the trained installer in mind
- Sliding door configuration features one sliding glass panel and one stationary panel and a towel bar on the fix panel
- The door provides a watertight seal, ensuring no leaks or spills occur during use
- Reversible, allowing for left or right opening to accommodate different bathroom layouts
- For a corner shower: combine a Halo return panel and an Halo Pro alcove door
- Glass panels come with the Lotus Easy Clean Glass Protection to repel soap and water stains for carefree maintenance
- Compatible with MAAX's full line of shower bases and walls, making it a versatile addition to any bathroom, validate all dimensions and measure on site before your final selection.

HALO PRO TB 44 ½-47 X 78 ¾ - 8MM - 138954

SKU	Glass / Finish	Dimensions & Weight	Packaging	MSRP
138954-900-084-000	Clear / Chrome	44 1/2” - 47” x 78 3/4” / 109 lb	8.37 ft^3	$ 1498
138954-900-340-000	Clear / Matte Black			$ 1610

HALO PRO TB 56 ½-59 X 78 ¾ - 8MM - 138956

SKU	Glass / Finish	Dimensions & Weight	Packaging	MSRP
138956-900-084-000	Clear / Chrome	56 1/2” - 59” x 78 3/4” / 123 lb	9.8 ft^3	$ 1635
138956-900-340-000	Clear / Matte Black			$ 1758

ACCESSORIES

SKU	Description	MSRP
10060311	Corner glass shelf (9 3/8 x 9 3/8 in.) (sold separately) 10 mm frosted glass with a clear band along the edge Compatible with Utile and tile shower walls	$ 174

STANDARD

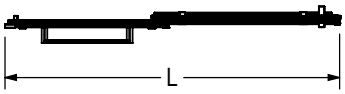

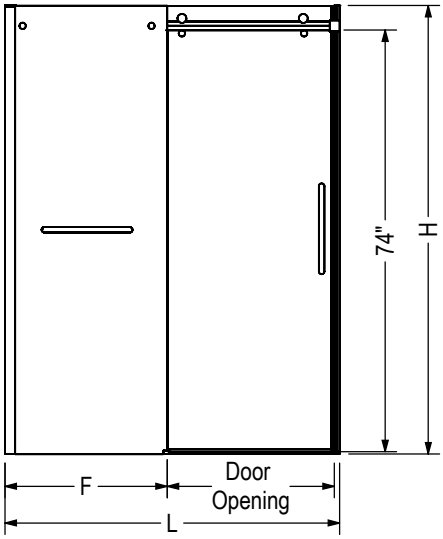

Code	Description	H	L Adjustable	F	Door Opening	Wall Adjustment
138950	Halo Pro 78 3/4" x 47" without Towel bar	78 3/4"	44 1/2" - 47"	22 1/2"	16 1/4" - 18 3/4"	1"
138954	Halo Pro 78 3/4" x 47" with Towel bar	78 3/4"	44 1/2" - 47"	22 1/2"	16 1/4" - 18 3/4"	1"
138952	Halo Pro 78 3/4" x 59" without Towel bar	78 3/4"	56 1/2" - 59"	28 5/8"	22 1/8" - 24 5/8"	1"
138956	Halo Pro 78 3/4" x 59" with Towel bar	78 3/4"	56 1/2" - 59"	28 5/8"	22 1/8" - 24 5/8"	1"

All dimensions are approximate. Structure measurements must be verified against the unit to ensure proper fit.

Halo Shower Doors

Material : Tempered Glass

Features

- 8 mm tempered glass panels
- Available in 4 finishes: Chrome, Brushed Nickel, Dark Bronze, Matte Black
- Sliding door configuration features one sliding glass panel and one stationary panel
- Ball bearing roller technology along a friction-free stainless steel rail system for a smooth and quiet opening
- The frameless design brings a sense of spaciousness to the room and creates a sleek, minimalist look
- Glass panels come with the Lotus Easy Clean Glass Protection to repel soap and water stains for carefree maintenance
- Compatible with MAAX's Utile wall system, allowing for a seamless and coordinated installation with the shower door, creating a cohesive and stylish bathroom design
- Warranty: 10 years

HALO 44 ½-47 X 78 ¾ - 8MM - 138996

SKU	Glass / Finish	Dimensions & Weight	Packaging	MSRP
138996-900-084-000	Clear / Chrome	44 1/2” - 47” x 78 3/4” / 144 lb	6 ft³	$ 1369
138996-900-173-000	Clear / Dark Bronze	44 1/2” - 47” x 78 3/4” / 116 lb		$ 1472
138996-900-305-000	Clear / Brushed Nickel			$ 1436
138996-900-340-000	Clear / Matte Black			$ 1472

HALO 56 ½-59 X 78 ¾ - 8MM - 138997

SKU	Glass / Finish	Dimensions & Weight	Packaging	MSRP
138997-900-084-000	Clear / Chrome	56 1/2” - 59” x 78 3/4” / 174 lb	7.2 ft³	$ 1505
138997-900-173-000	Clear / Dark Bronze	56 1/2” - 59” x 78 3/4” / 137 lb		$ 1608
138997-900-305-000	Clear / Brushed Nickel			$ 1575
138997-900-340-000	Clear / Matte Black			$ 1608

STANDARD

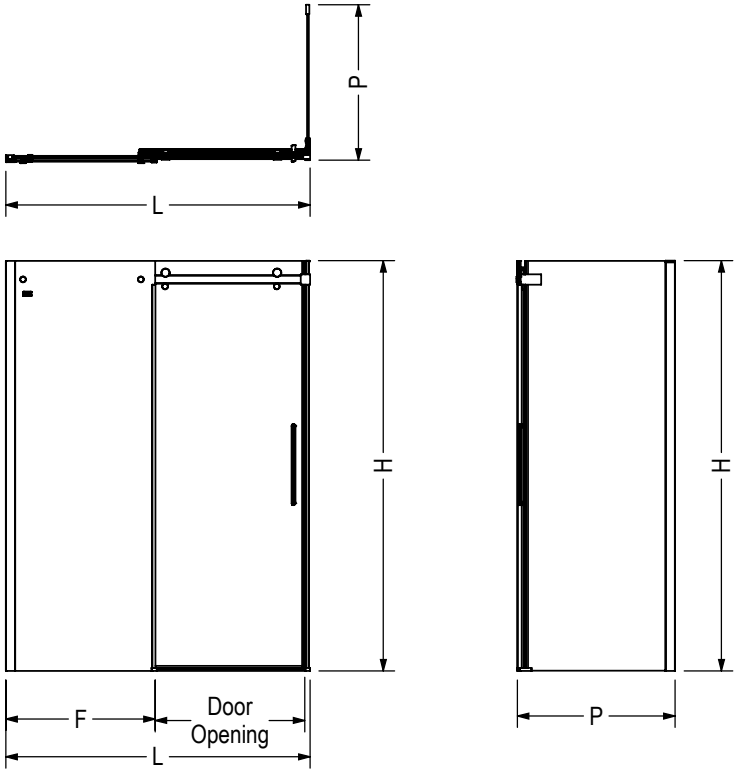

Code	Description	H	L Adjustable	F	P Adjustable	Door Opening	Wall Adjustment
138996	Halo 78 3/4" x 47"	78 3/4"	44 1/2" - 47"	22 1/2"	-	16 1/4" - 18 3/4"	1"
138997	Halo 78 3/4" x 59"	78 3/4"	56 1/2" - 59"	28 5/8"	-	22 1/8" - 24 5/8"	1"
139393	Return Panel 30"	78 3/4"	-	-	27 7/8"	-	1"
138998	Return Panel 32"	78 3/4"	-	-	29 7/8"	-	1"
139395	Return Panel 34"	78 3/4"	-	-	31 7/8"	-	1"
139396	Return Panel 36"	78 3/4"	-	-	33 7/8"	-	1"
139394	Return Panel 42"	78 3/4"	-	-	39 7/8"	-	1"

All dimensions are approximate. Structure measurements must be verified against the unit to ensure proper fit.

Luminescence Shower Doors

Material : Tempered Glass

Features

- Elegant 1/4 -inch (6 mm) clear tempered glass with minimalist hardware
- Fits showers with 70 1/2 -inch wall clearance, glass extends to 72 -inch
- Ball bearing roller system, for a quiet and gentle close
- Door is reversible, provides a right or left opening for ease of installation

LUMINESCENCE 44 ½-47 X 70 ½-72 - 6MM - 138992

SKU	Glass / Finish	Configuration	Dimensions & Weight	Packaging	MSRP
138992-900-084-000	Clear / Chrome	Center Drain	44 1/2” - 47” x 70 1/2” / 84 lb	44 ft^3	$ 1110

STANDARD

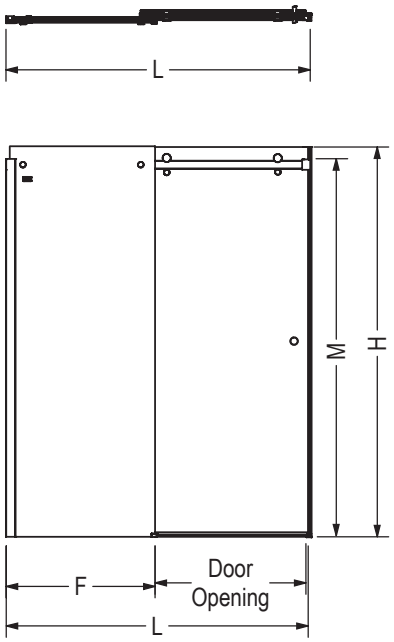

Code	Description	H	M	L Adjustable	F	Door Opening	Wall Adjustment
138992	Luminescence 44 1/2"-47" x 70 1/2"	72"	70 1/2"	44 1/2" - 47"	22 1/2"	18 3/8"	1"
138993	Luminescence 56 1/2"-59" x 70 1/2"	72"	70 1/2"	56 1/2" - 59"	28 5/8"	24 1/2"	1"

All dimensions are approximate. Structure measurements must be verified against the unit to ensure proper fit.

Odyssey SC Shower Doors

Material : Tempered Glass

Features

- 8 mm (5/16") tempered glass with Lotus easy clean protection
- Slim stainless header that requires no cut to ease installation
- Innovative double SOFT CLOSE by MAAX prevents slamming
- Double-sided handle designed for comfort
- Detachable door guide to distance the glass when cleaning
- 78" high clear glass panel
- High quality rollers for smooth glide
- Reversible shower door for left or right opening
- 5/8" out-of-plumb adjustment

ODYSSEY SC 57-59 1/2 X 78 - 8 MM - 137420

SKU	Glass / Finish	Dimensions & Weight	Packaging	MSRP
137420-900-084-000	Clear / Chrome	57" - 59 1/2" x 78" / 141.18 lb	6.99 ft^3	$ 1795
137420-900-305-000	Clear / Brushed Nickel			$ 1884
137420-900-340-000	Clear / Matte Black			$ 1928
137420-900-343-000	Clear / Brushed Gold	57" - 59 1/2" x 78" / 145.18 lb		$ 2152

ODYSSEY SC 45-47 1/2 X 78 - 8 MM - 137421

SKU	Glass / Finish	Dimensions & Weight	Packaging	MSRP
137421-900-084-000	Clear / Chrome	45" - 47 1/2" x 78" / 115.39 lb	5.76 ft^3	$ 1615
137421-900-305-000	Clear / Brushed Nickel			$ 1695
137421-900-340-000	Clear / Matte Black			$ 1736
137421-900-343-000	Clear / Brushed Gold	45" - 47 1/2" x 78" / 119.39 lb		$ 1937

STANDARD

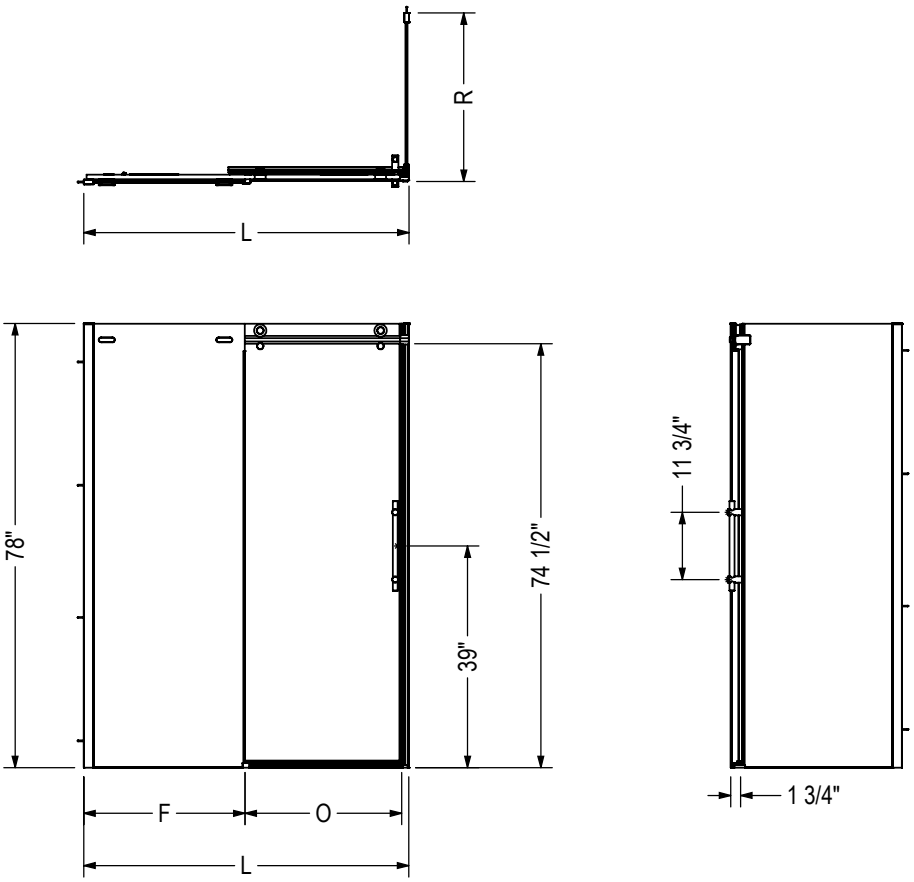

Code	Description	L Adjustable	F	O	R	Wall adjustment
137420	Odyssey Slider door 57"-59 1/2" x 78"	57" - 59 1/2"	27 7/8"	24 1/2" - 25"	-	5/8"
137421	Odyssey Slider door 45"-47 1/2" x 78"	45" - 47 1/2"	21 7/8"	18 1/4" - 18 3/4"	-	5/8"
137422	ODYSSEY RETURN PANEL 32"	-	-	-	29 3/4" - 30 1/2"	3/4"
137423	ODYSSEY RETURN PANEL 36"	-	-	-	33 3/4" - 34 1/2"	3/4"

All dimensions are approximate. Structure measurements must be verified against the unit to ensure proper fit.

Uptown Slider Shower Doors

Material : Tempered Glass

Features

- 8 mm (5/16”) tempered glass
- Configuration consists of a stationary panel and sliding door
- Available in 6 stylish finishes (monochrome or mixed-finishes)
- Handle available in stylish fashion mixed material finish
- Fits on showers, walls and tile
- Innovative Soft Close by MAAX technology prevents slamming
- Glass panels come with the Lotus Easy Clean Glass Protection to repel soap and water stains for carefree maintenance
- Reversible panel for easy corner installation on the left or on the right
- 1/2” out-of-plumb adjustment

UPTOWN 44-47 X 76 IN. 8 MM - 135323

SKU	Glass / Finish	Dimensions & Weight	Packaging	MSRP
135323-900-084-000	Clear / Chrome	44” - 47” x 76” / 107 lb	5.86 ft³	$ 1547
135323-900-173-000	Clear / Dark Bronze			$ 1661
135323-900-282-000	Clear / Chrome and White Marble			$ 1621
135323-900-283-000	Clear / Dark Bronze and Beige Marble			$ 1735
135323-900-285-000	Clear / Matte Black and Wood			$ 1735
135323-900-305-000	Clear / Brushed Nickel			$ 1629
135323-900-340-000	Clear / Matte Black			$ 1661

UPTOWN 56-59 X 76 IN. 8 MM - 135324

SKU	Glass / Finish	Dimensions & Weight	Packaging	MSRP
135324-900-084-000	Clear / Chrome	56” - 59” x 76” / 133 lb	64 ft³	$ 1642
135324-900-173-000	Clear / Dark Bronze			$ 1765
135324-900-282-000	Clear / Chrome and White Marble			$ 1716
135324-900-283-000	Clear / Dark Bronze and Beige Marble			$ 1840
135324-900-285-000	Clear / Matte Black and Wood			$ 1840
135324-900-305-000	Clear / Brushed Nickel			$ 1723
135324-900-340-000	Clear / Matte Black			$ 1765

ACCESSORIES

SKU	Description	MSRP
10068840-282-600	Mixed Finish Replacement Handle for Uptown Pivot and Slider. Available finishes: Chrome and White Marble **(282)**, Dark Bronze and Beige Marble **(283)**, Matte Black and Wood **(285)**	$ 89
10068840-283-600		$ 89
10068840-285-600		$ 89

STANDARD

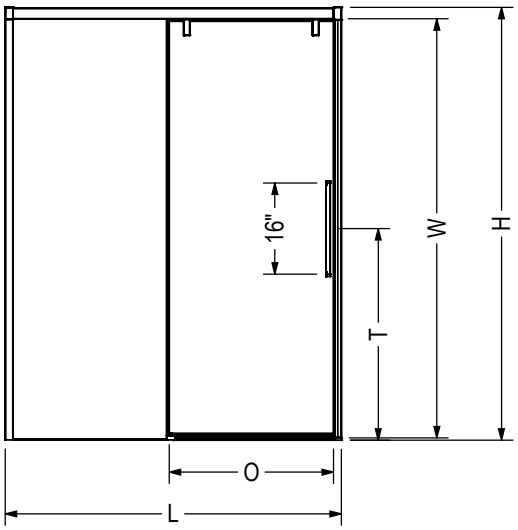

Code	Description	H	L	O	T	W
135323	Uptown Slider 76" x 44" - 47"	76"	44" - 47"	16" - 19"	37 1/8"	73 1/2"
135324	Uptown Slider 76" x 56" - 59"	76"	56" - 59"	22" - 25"	37 1/8"	73 1/2"

Wall adjusment = 1/2"

All dimensions are approximate. Structure measurements must be verified against the unit to ensure proper fit.

Capella Shower Doors

Material : Tempered Glass

Features

- GlassShield® technology pre-installed - provides extra layer of security for homes with children or elderly residents
- Wide opening to ease the access in and out of the shower
- Strongly built sill, permanently fixed on the base, better water barrier
- Hinge with patent mechanism that offers 3 in. of lateral adjustment
- Additional 3/4 in. of out-of-plumb adjustment
- Header-less door, no height restriction
- New design, 1 7/8in deep, makes it compatible with many bases and tile solutions
- Reversible showers door allowing left or right opening
- Magnetized closure provides watertight solution
- Combine with a Return Panel Capella, for a corner shower solution
- Support arm to increase sturdiness included

CAPELLA 78 32 ½-35 ½ X 78 - 8MM - 139584

SKU	Glass / Finish	Dimensions & Weight	MSRP
139584-810-084-000	Clear with GlassShield / Chrome	32 1/2” - 35 1/2” x 78” / 104 lb	$ 1560
139584-810-305-000	Clear with GlassShield / Brushed Nickel		$ 1637
139584-810-340-000	Clear with GlassShield / Matte Black		$ 1676

CAPELLA 78 44-47 X 78 - 8MM - 139586

SKU	Glass / Finish	Dimensions & Weight	MSRP
139586-810-084-000	Clear with GlassShield / Chrome	44” - 47” x 78” / 123 lb	$ 1792
139586-810-305-000	Clear with GlassShield / Brushed Nickel		$ 1859
139586-810-340-000	Clear with GlassShield / Matte Black		$ 1928

CAPELLA 78 56-59 X 78 - 8MM - 139587

SKU	Glass / Finish	Dimensions & Weight	MSRP
139587-810-084-000	Clear with GlassShield / Chrome	56” - 59” x 78” / 148 lb	$ 1928
139587-810-305-000	Clear with GlassShield / Brushed Nickel		$ 1996
139587-810-340-000	Clear with GlassShield / Matte Black		$ 1996

STANDARD

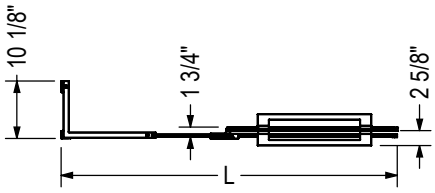

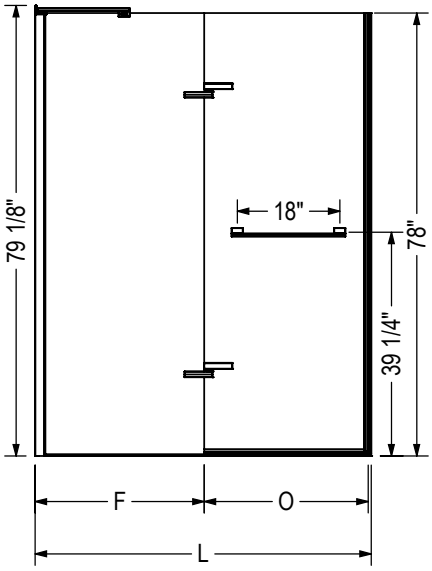

Code	Description	L	F	O
139584	Capella 78" x 32 1/2" - 35 1/2"	32 1/2" - 35 1/2"	5 3/8"	23 3/4" - 26 3/4"
139586	Capella 78" x 44" - 47"	44" - 47"	16 7/8"	23 3/4" - 26 3/4"
139587	Capella 78" x 56" - 59"	56" - 59"	28 7/8"	23 3/4" - 26 3/4"

- Wall adjustment = 3/4"

All dimensions are approximate. Structure measurements must be verified against the unit to ensure proper fit.

Go to Table of Contents

ModulR 2 Shower Doors

Material : Tempered Glass

Features

- Pivot door
- 8mm tempered glass with lotus glass protection
- Magnetic closure for increased watertightness
- Reversible doors for left or right opening

MODULR 2 TUNNEL 32 X 78 - 8MM - 137933

SKU	Glass / Finish	Dimensions & Weight	MSRP
137933-900-084-000	Clear / Chrome	32” - 32” x 78” / 72.52 lb	$ 2704
137933-900-305-000	Clear / Brushed Nickel		$ 2914

MODULR 2 TUNNEL 34 X 78 - 8MM - 137935

SKU	Glass / Finish	Dimensions & Weight	MSRP
137935-900-084-000	Clear / Chrome	34” - 34” x 78” / 72.52 lb	$ 2731
137935-900-305-000	Clear / Brushed Nickel		$ 2939

MODULR 2 TUNNEL 36 X 78 - 8MM - 137937

SKU	Glass / Finish	Dimensions & Weight	MSRP
137937-900-084-000	Clear / Chrome	36” - 36” x 78” / 90 lb	$ 2748
137937-900-305-000	Clear / Brushed Nickel		$ 2970

ACCESSORIES

SKU	Description	MSRP
10060311	Corner glass shelf (9 3/8 x 9 3/8 in.) (sold separately) 10 mm frosted glass with a clear band along the edge Compatible with Utile and tile shower walls	$ 174
10068586-305-603	10068586-XXX-603 - Designer handle 8” Available colours: Chrome (**084**), Brushed Nickel (**305**)	$ 255
10068586-084-603		$ 236

All dimensions are approximate. Structure measurements must be verified against the unit to ensure proper fit.

ModuIR PIVOT SHOWER DOOR:
TUNNEL 32/34" DOUBLE (506)

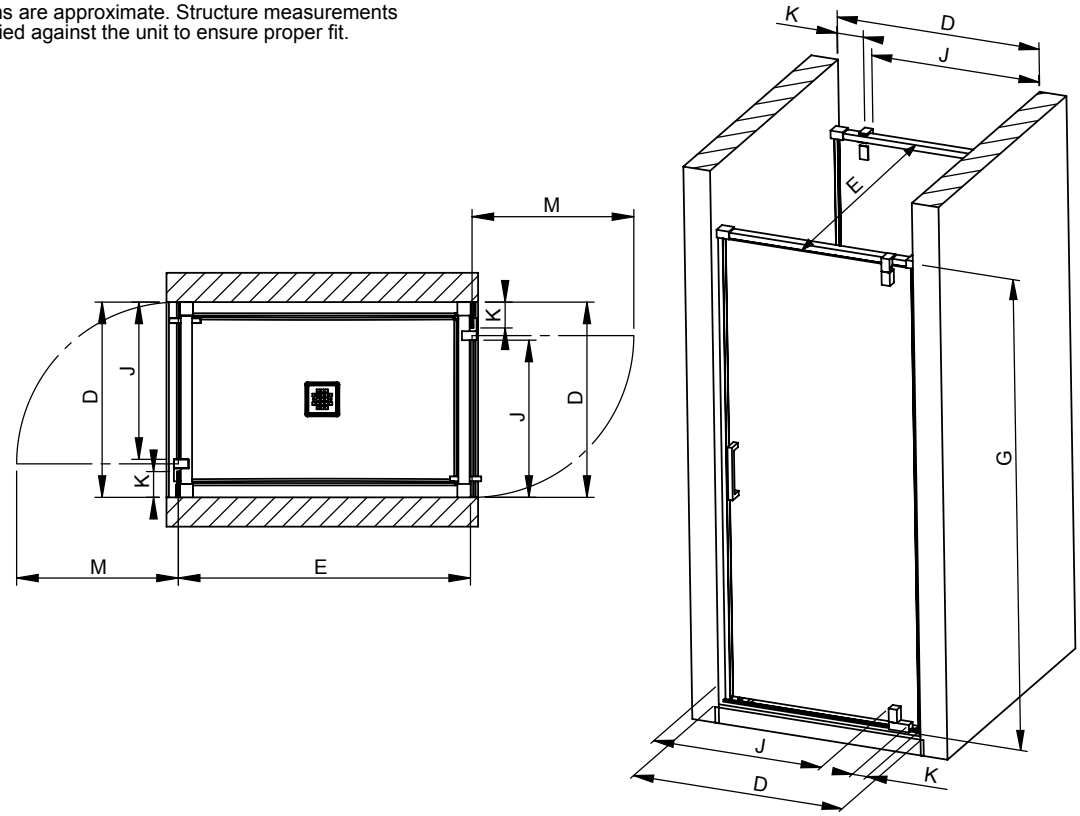

All complementary installation can be also build from the same listed product

PIVOT ON LEFT

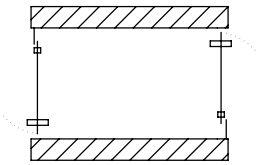

506PP OPTIONAL

PIVOT ON RIGHT

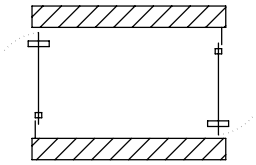

506PP AS SHOWN

PRODUCT	BASE SIZE	G	D	E	J	M
		HEIGHT (top of glass)	WIDTH (min-max)	DEPTH (min-max)	DOOR ACCESS (maximum)	ENCUM-BRANCE
137933	48X32	78"	30-1/8" - 31-3/8"	45-1/4" - 46-3/4"	26-1/2"	24-3/8"
137935	48X34		32-1/8" - 33-3/8"			
137933	60X32		30-1/8" - 31-3/8"	57-1/4" - 58/3/4"		

Go to Table of Contents

ModulR Alcove Shower Doors

Material : Tempered Glass

Features

- Pivot door
- 8mm tempered glass with lotus glass protection
- Magnetic closure for increased watertightness
- Reversible doors for left or right opening

MODULR 60 X 78 - 8MM - 137832

SKU	Glass / Finish	Dimensions & Weight	Packaging	MSRP
137832-900-084-000	Clear / Chrome	57 1/8” - 59” x 78” / 92 lb	5.74 ft^3	$ 1842
137832-900-305-000	Clear / Brushed Nickel			$ 1982

MODULR 48 X 78 - 8MM - 137833

SKU	Glass / Finish	Dimensions & Weight	Packaging	MSRP
137833-900-084-000	Clear / Chrome	45 1/8” - 47” x 78” / 92 lb	5.74 ft^3	$ 1610
137833-900-305-000	Clear / Brushed Nickel			$ 1732

MODULR 36 X 78 - 8MM - 137835

SKU	Glass / Finish	Dimensions & Weight	Packaging	MSRP
137835-900-084-000	Clear / Chrome	33 1/8” - 34 5/8” x 78” / 92 lb	5.74 ft^3	$ 1377
137835-900-305-000	Clear / Brushed Nickel			$ 1487

MODULR 34 X 78 - 8MM - 137836

SKU	Glass / Finish	Dimensions & Weight	Packaging	MSRP
137836-900-084-000	Clear / Chrome	32 1/4” - 33 1/2” x 78” / 136 lb	10.11 ft^3	$ 1369
137836-900-305-000	Clear / Brushed Nickel			$ 1473

ACCESSORIES

SKU	Description	MSRP
10060311	Corner glass shelf (9 3/8 x 9 3/8 in.) (sold separately) 10 mm frosted glass with a clear band along the edge Compatible with Utile and tile shower walls	$ 174
10068586-305-603	10068586-XXX-603 - Designer handle 8” Available colours: Chrome (**084**), Brushed Nickel (**305**)	$ 255
10068586-084-603		$ 236

All dimensions are approximate. Structure measurements must be verified against the unit to ensure proper fit.

ModuIR PIVOT SHOWER DOOR:
DEEP ALCOVE 32/34" (504)

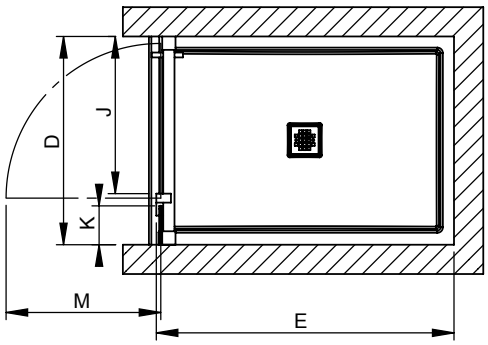

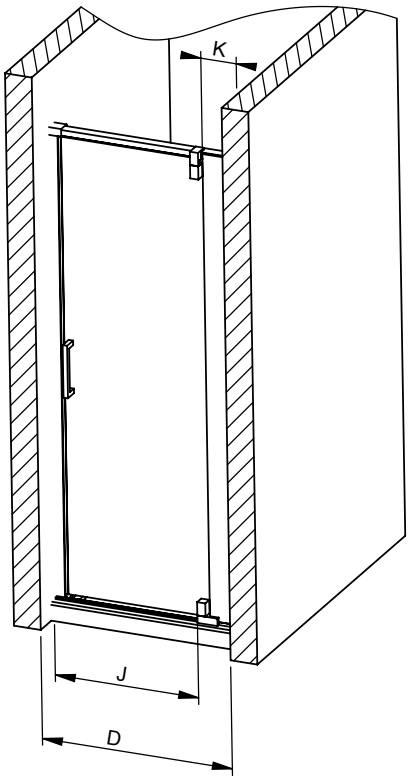

All complementary installation can be also build from the same listed product

PIVOT ON LEFT

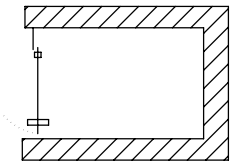

504 OPTIONAL

PIVOT ON RIGHT

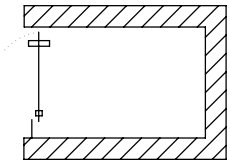

504 AS SHOWN

PRODUCT	BASE SIZE	G HEIGHT (top of glass)	E DEPTH (min-max)	D WIDTH (min-max)	J DOOR ACCESS (maximum)	K FIXED PANEL	M ENCUM-BRANCE
137837	48X32	78"	45-1/8" - 46-5/8"	30-1/4" - 31-1/2"	26-1/2"		27-3/16"
137836	48X34			32-1/4" - 33-1/2"			
137837	60X32		57-1/8"- 58-5/8"	30-1/4" - 31-1/2"			

Go to Table of Contents

ModulR Wall-Mounted Shower Doors

Material : Tempered Glass

Features

- Pivot door
- 8mm tempered glass with lotus glass protection
- Magnetic closure for increased watertightness
- Reversible doors for left or right opening

MODULR WALL-MOUNTED 48 X 36 X 78 - 8MM - 137863

SKU	Glass / Finish	Dimensions & Weight	MSRP
137863-900-084-000	Clear / Chrome	48” - 48” x 78” / 192.5 lb	$ 2686
137863-900-305-000	Clear / Brushed Nickel		$ 2884

MODULR WALL-MOUNTED 48 X 34 X 78 - 8MM - 137864

SKU	Glass / Finish	Dimensions & Weight	MSRP
137864-900-084-000	Clear / Chrome	48” - 48” x 78” / 206 lb	$ 2668
137864-900-305-000	Clear / Brushed Nickel		$ 2871

MODULR WALL-MOUNTED 48 X 32 X 78 - 8MM - 137865

SKU	Glass / Finish	Dimensions & Weight	MSRP
137865-900-084-000	Clear / Chrome	48” - 48” x 78” / 180.5 lb	$ 2656
137865-900-305-000	Clear / Brushed Nickel		$ 2858

MODULR WALL-MOUNTED 60 X 36 X 78 - 8MM - 137873

SKU	Glass / Finish	Dimensions & Weight	MSRP
137873-900-084-000	Clear / Chrome	60” - 60” x 78” / 82.26 lb	$ 2914
137873-900-305-000	Clear / Brushed Nickel		$ 3135

MODULR WALL-MOUNTED 60 X 32 X 78 - 8MM - 137874

SKU	Glass / Finish	Dimensions & Weight	MSRP
137874-900-084-000	Clear / Chrome	60” - 60” x 78” / 208 lb	$ 2884
137874-900-305-000	Clear / Brushed Nickel		$ 3109

ACCESSORIES

SKU	Description	MSRP
10060311	Corner glass shelf (9 3/8 x 9 3/8 in.) (sold separately) 10 mm frosted glass with a clear band along the edge Compatible with Utile and tile shower walls	$ 174
10068586-305-603	10068586-XXX-603 - Designer handle 8” Available colours: Chrome (**084**), Brushed Nickel (**305**)	$ 255
10068586-084-603		$ 236

All dimensions are approximate. Structure measurements must be verified against the unit to ensure proper fit.

ModuIR PIVOT SHOWER DOOR:
WALLMOUNT SHOWER (505)

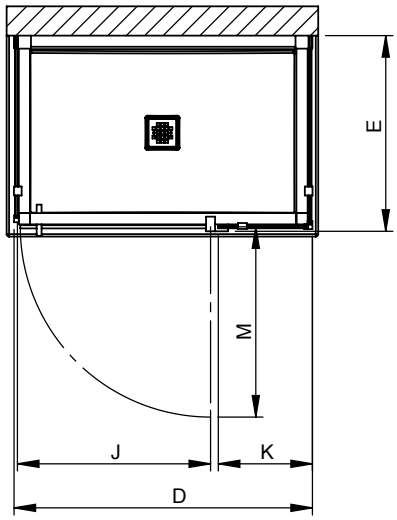

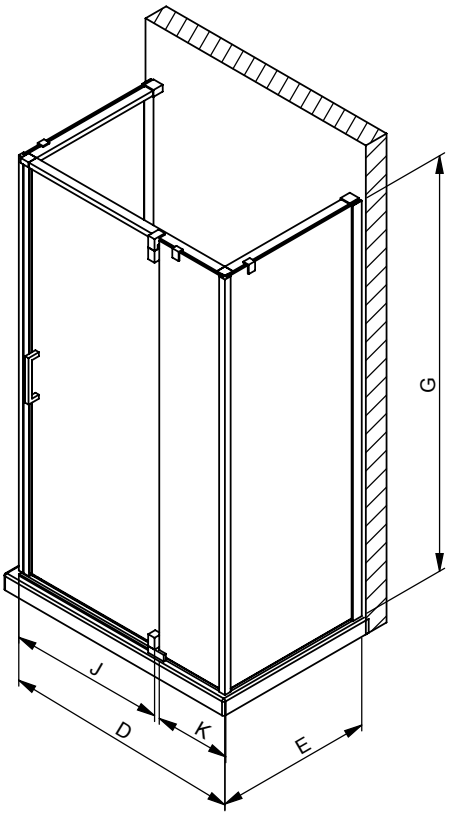

All complementary installation can be also build from the same listed product

ACCESS ON LEFT

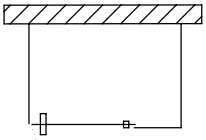

505 AS SHOWN

ACCESS ON RIGHT

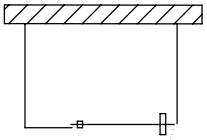

505 (MIRRORED)

PRODUCT	BASE SIZE	G HEIGHT (top of glass)	D WIDTH (min-max)	E DEPTH (min-max)	J DOOR ACCESS (maximum)	K FIXED PANEL	M FLOOR-CLEARANCE
137865	48X32	78"	45-1/2" - 47"	30-1/8" - 31-3/8"	26-1/2"	15-1/4"-15-1/2"	27-7/8"
137864	48X34			32-1/8" - 33-3/8"			
137863	48X36			34-1/8" - 35-3/8"			
137874	60X32		57-1/2"- 59"	30-1/8" - 31-3/8"		26-3/4"-27"	
137873	60X36			34-1/8" - 35-3/8"			

Madono Shower Doors

Material : Tempered Glass

Features

- 1-panel 1/4 in./6 mm frameless pivot door for alcove shower
- Chrome knob for a clean simple look
- Reversible door for left or right opening

MADONO 28 ½-30 ½ X 67 - 6MM - 105416

SKU	Glass / Finish	Dimensions & Weight	Packaging	MSRP
105416-900-084-000	Clear / Chrome	28 1/2” - 30 1/2” x 67” / 32.0 lb	3.62 ft^3	$ 611

MADONO 31 ½-33 ½ X 67 - 6MM - 105417

SKU	Glass / Finish	Dimensions & Weight	Packaging	MSRP
105417-900-084-000	Clear / Chrome	31 1/2” - 33 1/2” x 67” / 34.0 lb	3.99 ft^3	$ 651

MADONO 34 ½-36 ½ X 67 - 6MM - 105418

SKU	Glass / Finish	Dimensions & Weight	Packaging	MSRP
105418-900-084-000	Clear / Chrome	34 1/2” - 36 1/2” x 67” / 46 lb	3.99 ft^3	$ 691

MADONO 24 ½-26 ½ X 67 - 6MM - 105420

SKU	Glass / Finish	Dimensions & Weight	Packaging	MSRP
105420-900-084-000	Clear / Chrome	24 1/2” - 26 1/2” x 67” / 40 lb	3.62 ft^3	$ 569

STANDARD

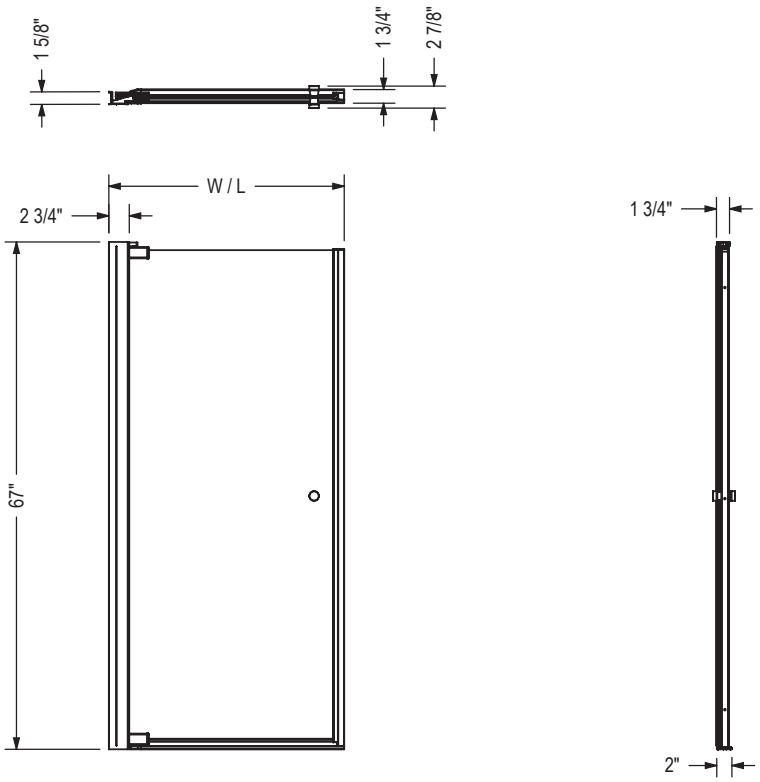

Code	Description	H	W / L
105420/105419	Madono / Insight 24-1/2" - 26-1/2"	67"	24-1/2" - 26-1/2"
105416/105316	Madono / Insight 28-1/2" - 30-1/2"	67"	28-1/2" - 30-1/2"
105417/105317	Madono / Insight 31-1/2" - 33-1/2"	67"	31-1/2" - 33-1/2"
105418/105318	Madono / Insight 34-1/2" - 36-1/2"	67"	34-1/2" - 36-1/2"

All dimensions are approximate. Structure measurements must be verified against the unit to ensure proper fit.

Manhattan 1 Panel Shower Doors

Material : Tempered Glass

Features

- Frameless Pivot door for Alcove Installation
- Available in 3 stylish finishes and 18 sizes
- 6mm (1/4") clear tempered glass
- 2" of lateral adjustment integrated into each door. For an additional ½-inch, see filler sold separately (SKU 10041204)
- Door pivoting inside and outside (180 degrees)
- Slim interface of 7/8" (22mm) to fit on most shower bases
- No threshold piece for ease of cleaning and easy access
- No height restrictions
- Wide opening for comfortable access

MANHATTAN 23-25 X 68 - 6MM - 138260

SKU	Glass / Finish	Dimensions & Weight	Packaging	MSRP
138260-900-084-100	Clear / Chrome	23" - 25" x 68" / 36 lb	5.11 ft³	$ 513
138260-900-084-101				$ 513
138260-900-305-100	Clear / Brushed Nickel			$ 537
138260-900-305-101				$ 537
138260-900-340-100	Clear / Matte Black			$ 563
138260-900-340-101				$ 563

MANHATTAN 25-27 X 68 - 6MM - 138261

SKU	Glass / Finish	Dimensions & Weight	Packaging	MSRP
138261-900-084-100	Clear / Chrome	25" - 27" x 68" / 38 lb	42 ft³	$ 550
138261-900-084-101				$ 550
138261-900-305-100	Clear / Brushed Nickel			$ 578
138261-900-305-101				$ 578
138261-900-340-100	Clear / Matte Black			$ 605
138261-900-340-101				$ 605

MANHATTAN 27-29 X 68 - 6MM - 138262

SKU	Glass / Finish	Dimensions & Weight	Packaging	MSRP
138262-900-084-100	Clear / Chrome	27" - 29" x 68" / 40 lb	42 ft³	$ 590
138262-900-084-101				$ 590
138262-900-305-100	Clear / Brushed Nickel			$ 619
138262-900-305-101				$ 619
138262-900-340-100	Clear / Matte Black			$ 648
138262-900-340-101				$ 648

MANHATTAN 29-31 X 68 - 6MM - 138263

SKU	Glass / Finish	Dimensions & Weight	Packaging	MSRP
138263-900-084-100	Clear / Chrome	29" - 31" x 68" / 44 lb	4.43 ft³	$ 630
138263-900-084-101				$ 630
138263-900-305-100	Clear / Brushed Nickel			$ 660
138263-900-305-101				$ 660
138263-900-340-100	Clear / Matte Black			$ 692
138263-900-340-101				$ 692

MANHATTAN 31-33 X 68 - 6MM - 138264

SKU	Glass / Finish	Dimensions & Weight	Packaging	MSRP
138264-900-084-100	Clear / Chrome	31” - 33” x 68” / 46 lb	5.11 ft^3	$ 674
138264-900-084-101				$ 674
138264-900-305-100	Clear / Brushed Nickel			$ 707
138264-900-305-101				$ 707
138264-900-340-100	Clear / Matte Black			$ 741
138264-900-340-101				$ 741

MANHATTAN 33-35 X 68 - 6MM - 138265

SKU	Glass / Finish	Dimensions & Weight	Packaging	MSRP
138265-900-084-100	Clear / Chrome	33” - 35” x 68” / 50 lb	5.11 ft^3	$ 721
138265-900-084-101				$ 721
138265-900-305-100	Clear / Brushed Nickel			$ 758
138265-900-305-101				$ 758
138265-900-340-100	Clear / Matte Black			$ 794
138265-900-340-101				$ 794

ACCESSORIES

SKU	Description	MSRP
10041204-340-001	Manhattan Shower Door Filler 1/2 in. Available finishes: Chrome **(084)**, Brushed Nickel **(305)** and Matte Black **(340)**	$ 95
10041204-305-001		$ 91
10041204-084-001		$ 87

STANDARD

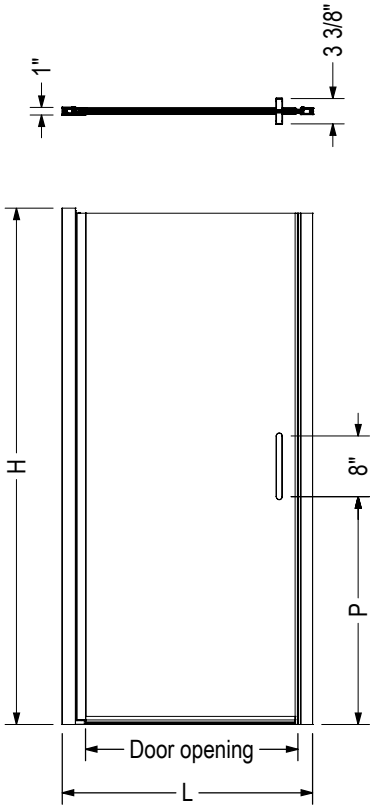

Code	Description	H	L Adjustable	Door opening	P
138260	Manhattan 68" x 23" - 25"	68"	23" - 25"	18 3/8"	30"
138261	Manhattan 68" x 25" - 27"	68"	25" - 27"	20 3/8"	30"
138262	Manhattan 68" x 27" - 29"	68"	27" - 29"	22 3/8"	30"
138263	Manhattan 68" x 29" - 31"	68"	29" - 31"	24 3/8"	30"
138264	Manhattan 68" x 31" - 33"	68"	31" - 33"	26 3/8"	30"
138265	Manhattan 68" x 33" - 35"	68"	33" - 35"	28 3/8"	30"

All dimensions are approximate. Structure measurements must be verified against the unit to ensure proper fit.

Manhattan 2 Panel Shower Doors

Material : Tempered Glass

Features

- Frameless Pivot door for Alcove Installation
- Available in 3 stylish finishes and 18 sizes
- 6mm (1/4") clear tempered glass
- 2" of lateral adjustment integrated into each door. For an additional ½-inch, see filler sold separately (SKU 10041204)
- Door pivoting inside and outside (180 degrees)
- Slim interface of 7/8" (22mm) to fit on most shower bases
- No threshold piece for ease of cleaning and easy access
- No height restrictions
- Wide opening for comfortable access

MANHATTAN 35-37 X 68 - 6MM - 138266

SKU	Glass / Finish	Dimensions & Weight	Packaging	MSRP
138266-900-084-100	Clear / Chrome	35" - 37" x 68" / 54 lb	4.43 ft³	$ 794
138266-900-084-101				$ 794
138266-900-305-100	Clear / Brushed Nickel			$ 832
138266-900-305-101				$ 832
138266-900-340-100	Clear / Matte Black			$ 873
138266-900-340-101				$ 873

MANHATTAN 37-39 X 68 - 6MM - 138267

SKU	Glass / Finish	Dimensions & Weight	Packaging	MSRP
138267-900-084-100	Clear / Chrome	37" - 39" x 68" / 58 lb	5.11 ft³	$ 816
138267-900-084-101				$ 816
138267-900-305-100	Clear / Brushed Nickel			$ 858
138267-900-305-101				$ 858
138267-900-340-100	Clear / Matte Black			$ 900
138267-900-340-101				$ 900

MANHATTAN 39-41 X 68 - 138268

SKU	Glass / Finish	Dimensions & Weight	Packaging	MSRP
138268-900-084-100	Clear / Chrome	39" - 41" x 68" / 60 lb	5.11 ft³	$ 842
138268-900-084-101				$ 842
138268-900-305-100	Clear / Brushed Nickel			$ 883
138268-900-305-101				$ 883
138268-900-340-100	Clear / Matte Black			$ 924
138268-900-340-101				$ 924

MANHATTAN 41-43 X 68 - 6MM - 138269

SKU	Glass / Finish	Dimensions & Weight	Packaging	MSRP
138269-900-084-100	Clear / Chrome	41" - 43" x 68" / 62 lb	4.43 ft³	$ 866
138269-900-084-101				$ 866
138269-900-305-100	Clear / Brushed Nickel			$ 910
138269-900-305-101				$ 910
138269-900-340-100	Clear / Matte Black			$ 954
138269-900-340-101				$ 954

MANHATTAN 43-45 X 68 - 138270

SKU	Glass / Finish	Dimensions & Weight	Packaging	MSRP
138270-900-084-100	Clear / Chrome	43” - 45” x 68” / 66 lb	4.77 ft^3	$ 892
138270-900-084-101				$ 892
138270-900-305-100	Clear / Brushed Nickel			$ 938
138270-900-305-101				$ 938
138270-900-340-100	Clear / Matte Black			$ 982
138270-900-340-101				$ 982

MANHATTAN 45-47 X 68 - 138271

SKU	Glass / Finish	Dimensions & Weight	Packaging	MSRP
138271-900-084-100	Clear / Chrome	45” - 47” x 68” / 70 lb	3.78 ft^3	$ 919
138271-900-084-101				$ 919
138271-900-305-100	Clear / Brushed Nickel			$ 965
138271-900-305-101				$ 965
138271-900-340-100	Clear / Matte Black			$ 1013
138271-900-340-101				$ 1013

MANHATTAN 47-49 X 68 - 6MM - 138272

SKU	Glass / Finish	Dimensions & Weight	Packaging	MSRP
138272-900-084-100	Clear / Chrome	47” - 49” x 68” / 72 lb	4.43 ft^3	$ 947
138272-900-084-101				$ 947
138272-900-305-100	Clear / Brushed Nickel			$ 994
138272-900-305-101				$ 994
138272-900-340-100	Clear / Matte Black			$ 1042
138272-900-340-101				$ 1042

MANHATTAN 49-51 X 68 - 6MM - 138273

SKU	Glass / Finish	Dimensions & Weight	Packaging	MSRP
138273-900-084-100	Clear / Chrome	49” - 51” x 68” / 74 lb	4.77 ft^3	$ 975
138273-900-084-101				$ 975
138273-900-305-100	Clear / Brushed Nickel			$ 1024
138273-900-305-101				$ 1024
138273-900-340-100	Clear / Matte Black			$ 1073
138273-900-340-101				$ 1073

MANHATTAN 51-53 X 68 - 6MM - 138274

SKU	Glass / Finish	Dimensions & Weight	Packaging	MSRP
138274-900-084-100	Clear / Chrome	51” - 53” x 68” / 76 lb	54 ft^3	$ 1005
138274-900-084-101				$ 1005
138274-900-305-100	Clear / Brushed Nickel			$ 1055
138274-900-305-101				$ 1055
138274-900-340-100	Clear / Matte Black			$ 1105
138274-900-340-101				$ 1105

MANHATTAN 53-55 X 68 - 6MM - 138275

SKU	Glass / Finish	Dimensions & Weight	Packaging	MSRP
138275-900-084-100	Clear / Chrome	53” - 55” x 68” / 80 lb	4.77 ft^3	$ 1033
138275-900-084-101				$ 1033
138275-900-305-100	Clear / Brushed Nickel			$ 1085
138275-900-305-101				$ 1085
138275-900-340-100	Clear / Matte Black			$ 1137
138275-900-340-101				$ 1137

MANHATTAN 55-57 X 68 - 6MM - 138276

SKU	Glass / Finish	Dimensions & Weight	Packaging	MSRP
138276-900-084-100	Clear / Chrome	55” - 57” x 68” / 82 lb	4.77 ft^3	$ 1065
138276-900-084-101				$ 1065

MANHATTAN 55-57 X 68 - 6MM - 138276

SKU	Glass / Finish	Dimensions & Weight	Packaging	MSRP
138276-900-305-100	Clear / Brushed Nickel	55” - 57” x 68” / 82 lb	4.77 ft^3	$ 1118
138276-900-305-101				$ 1118
138276-900-340-100	Clear / Matte Black			$ 1172
138276-900-340-101				$ 1172

MANHATTAN 57-59 X 68 - 138277

SKU	Glass / Finish	Dimensions & Weight	Packaging	MSRP
138277-900-084-100	Clear / Chrome	57” - 59” x 68” / 84 lb	54 ft^3	$ 1098
138277-900-084-101				$ 1098
138277-900-305-100	Clear / Brushed Nickel			$ 1153
138277-900-305-101				$ 1153
138277-900-340-100	Clear / Matte Black			$ 1208
138277-900-340-101				$ 1208

ACCESSORIES

SKU	Description	MSRP
10041204-340-001	Manhattan Shower Door Filler 1/2 in. Available finishes: Chrome **(084)**, Brushed Nickel **(305)** and Matte Black **(340)**	$ 95
10041204-305-001		$ 91
10041204-084-001		$ 87

STANDARD

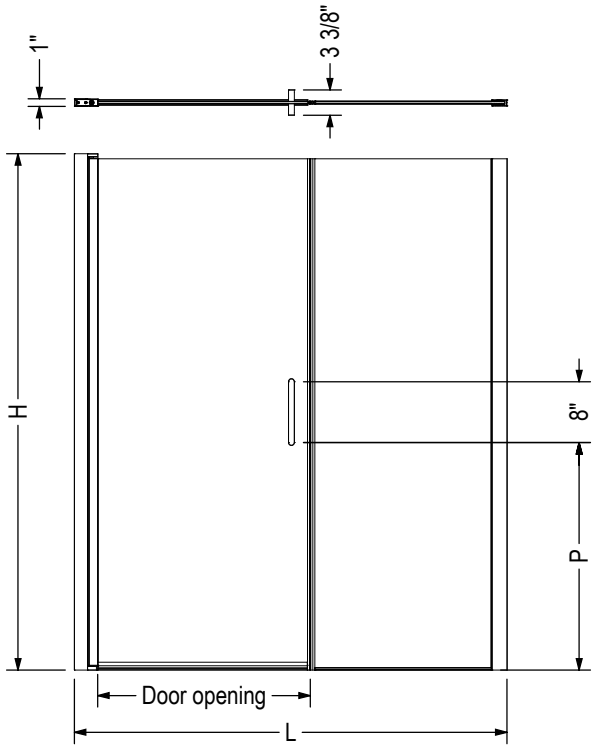

Code	Description	H	L Adjustable	Door opening	P
138266	Manhattan 68" x 35" - 37"	68"	35" - 37"	24 3/8"	30"
138267	Manhattan 68" x 37" - 39"	68"	37" - 39"	26 3/8"	30"
138268	Manhattan 68" x 39" - 41"	68"	39" - 41"	28 3/8"	30"
138269	Manhattan 68" x 41" - 43"	68"	41" - 43"	24 3/8"	30"
138270	Manhattan 68" x 43" - 45"	68"	43" - 45"	26 3/8"	30"
138271	Manhattan 68" x 45" - 47"	68"	45" - 47"	28 3/8"	30"
138272	Manhattan 68" x 47" - 49"	68"	47" - 49"	24 3/8"	30"
138273	Manhattan 68" x 49" - 51"	68"	49" - 51"	26 3/8"	30"
138274	Manhattan 68" x 51" - 53"	68"	51" - 53"	28 3/8"	30"
138275	Manhattan 68" x 53" - 55"	68"	53" - 55"	24 3/8"	30"
138276	Manhattan 68" x 55" - 57"	68"	55" - 57"	26 3/8"	30"
138277	Manhattan 68" x 57" - 59"	68"	57" - 59"	28 3/8"	30"

All dimensions are approximate. Structure measurements must be verified against the unit to ensure proper fit.

Pivolok Deluxe Shower Doors

Material : Tempered Glass

Features

- 1-panel framed pivot door for alcove shower
- Full-length magnetic catch concealed in the door edge which allows the door to close tightly
- Reversible door for left or right installation
- Framed integrated channel redirects water toward the inside of the shower
- Fixed panel allows to increase the adjustment to fit wider shower openings

PIVOLOK DELUXE 32 ½-37 X 64 ½ IN. - 136435

SKU	Glass / Finish	Dimensions & Weight	Packaging	MSRP
136435-900-084-000	Clear / Chrome	32 1/2” - 37” x 64 1/2” / 44 lb	3.48 ft^3	$ 632

Pivolok Shower Doors

Material : Tempered Glass

Features

- 1-panel framed pivot door for alcove shower
- Full-length magnetic catch allows the door to close tightly
- Reversible door for left or right installation
- Integrated channel redirects water toward the inside of the shower
- Full-length aluminum pull reinforces door and doubles as a handle

PIVOLOK 19-20 ¾ X 64 ½ IN. - 136605

SKU	Glass / Finish	Dimensions & Weight	Packaging	MSRP
136605-900-084-000	Clear / Chrome	19” - 20 3/4” x 64 1/2” / 25 lb	2.25 ft³	$ 406
136605-970-084-000	Raindrop / Chrome			$ 406

PIVOLOK 21-22 ¾ X 64 ½ IN. - 136615

SKU	Glass / Finish	Dimensions & Weight	Packaging	MSRP
136615-900-084-000	Clear / Chrome	21” - 22 3/4” x 64 1/2” / 28 lb	2.41 ft³	$ 406
136615-970-084-000	Raindrop / Chrome			$ 406

PIVOLOK 23-24 ¾ X 64 ½ IN. - 136625

SKU	Glass / Finish	Dimensions & Weight	Packaging	MSRP
136625-900-084-000	Clear / Chrome	23” - 24 3/4” x 64 1/2” / 32 lb	2.64 ft³	$ 424
136625-970-084-000	Raindrop / Chrome			$ 424

PIVOLOK 25-26 ¾ X 64 ½ IN. - 136626

SKU	Glass / Finish	Dimensions & Weight	Packaging	MSRP
136626-900-084-000	Clear / Chrome	25” - 26 3/4” x 64 1/2” / 31 lb	2.53 ft³	$ 424
136626-970-084-000	Raindrop / Chrome			$ 424

PIVOLOK 27-28 ¾ X 64 ½ IN. - 136635

SKU	Glass / Finish	Dimensions & Weight	Packaging	MSRP
136635-900-084-000	Clear / Chrome	27” - 28 3/4” x 64 1/2” / 34 lb	3.96 ft³	$ 439
136635-970-084-000	Raindrop / Chrome		38 ft³	$ 439

PIVOLOK 29-30 ¾ X 64 ½ IN. - 136645

SKU	Glass / Finish	Dimensions & Weight	Packaging	MSRP
136645-900-084-000	Clear / Chrome	29” - 30 3/4” x 64 1/2” / 35 lb	3.23 ft³	$ 457
136645-970-084-000	Raindrop / Chrome			$ 457

PIVOLOK 31-32 ¾ X 64 ½ IN. - 136655

SKU	Glass / Finish	Dimensions & Weight	Packaging	MSRP
136655-900-084-000	Clear / Chrome	31” - 32 3/4” x 64 1/2” / 37 lb	3.96 ft³	$ 474
136655-970-084-000	Raindrop / Chrome			$ 474

PIVOLOK 33-34 ¾ X 64 ½ IN. - 136656

SKU	Glass / Finish	Dimensions & Weight	Packaging	MSRP
136656-900-084-000	Clear / Chrome	33” - 34 3/4” x 64 1/2” / 38 lb	3.35 ft³	$ 489

PIVOLOK 33-34 ¾ X 64 ½ IN. - 136656

SKU	Glass / Finish	Dimensions & Weight	Packaging	MSRP
136656-970-084-000	Raindrop / Chrome	33” - 34 3/4” x 64 1/2” / 38 lb	3.35 ft^3	$ 489

ACCESSORIES

SKU	Description	MSRP
10041702-000-601	Wall jamb kit to fit Mirolin units	$ 109

STANDARD

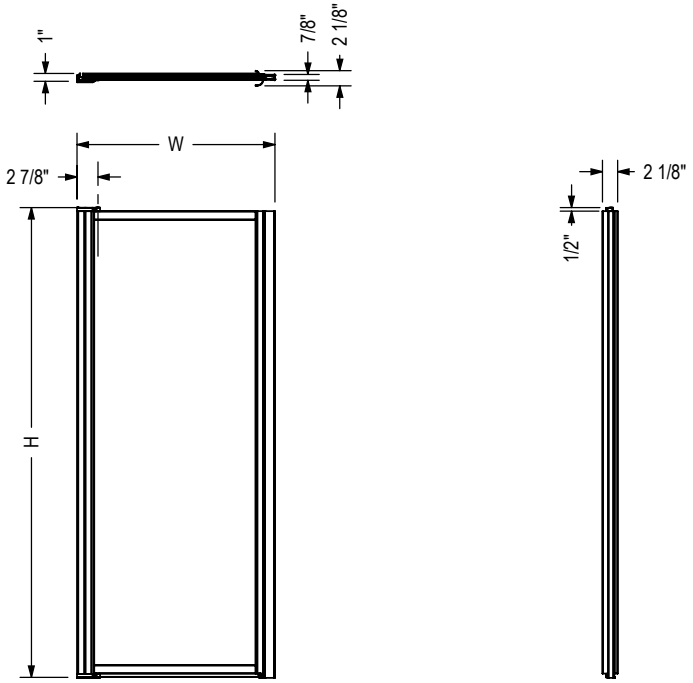

Code	Description	H	W
136605	Door Pivolok 19" - 20 3/4"	64 1/2"	19" - 20 3/4"
136615	Door Pivolok 21" - 22 3/4"	64 1/2"	21" - 22 3/4"
136625	Door Pivolok 23" - 24 3/4"	64 1/2"	23" - 24 3/4"
136626	Door Pivolok 25" - 26 3/4"	64 1/2"	25" - 26 3/4"
136635	Door Pivolok 27" - 28 3/4"	64 1/2"	27" - 28 3/4"
136645	Door Pivolok 29" - 30 3/4"	64 1/2"	29" - 30 3/4"
136655	Door Pivolok 31" - 32 3/4"	64 1/2"	31" - 32 3/4"
136656	Door Pivolok 33" - 34 3/4"	64 1/2"	33" - 34 3/4"

All dimensions are approximate. Structure measurements must be verified against the unit to ensure proper fit.

Go to Table of Contents

Polar Shower Doors

Material : Tempered Glass

Features

- Raindrop 4 mm tempered glass for more privacy
- Chrome finish frame with integrated vertical handle for a clean look
- Pivoting door provides a wide opening for ease of access in and out of the shower
- Reversible, allowing for left or right opening to accommodate different bathroom layouts
- Full-length magnetic door latch ensures the door remains securely closed
- Out-of-plumb adjustment in the wall profile
- Door made of luxurious ANSI certified tempered glass for your safety
- Proudly made in Canada
- Warranty: 10 years

POLAR PIVOT 27-28 ¾ X 64 ½ IN. - 136730

SKU	Glass / Finish	Dimensions & Weight	Packaging	MSRP
136730-970-084-000	Raindrop / Chrome	27” - 28 3/4” x 64 1/2” / 34 lb	38 ft^3	$ 439

POLAR PIVOT 31-32 ¾ X 64 ½ IN. - 136731

SKU	Glass / Finish	Dimensions & Weight	Packaging	MSRP
136731-970-084-000	Raindrop / Chrome	31” - 31 3/4” x 64 1/2” / 34 lb	38 ft^3	$ 474

POLAR PIVOT 29-30 ¾ X 64 ½ IN. - 136732

SKU	Glass / Finish	Dimensions & Weight	Packaging	MSRP
136732-970-084-000	Raindrop / Chrome	29” - 30 3/4” x 64 1/2” / 34 lb	38 ft^3	$ 457

POLAR PIVOT 33-34 ¾ X 64 ½ IN. - 136733

SKU	Glass / Finish	Dimensions & Weight	Packaging	MSRP
136733-970-084-000	Raindrop / Chrome	33” - 34 3/4” x 64 1/2” / 34 lb	38 ft^3	$ 489

Go to Table of Contents

STANDARD

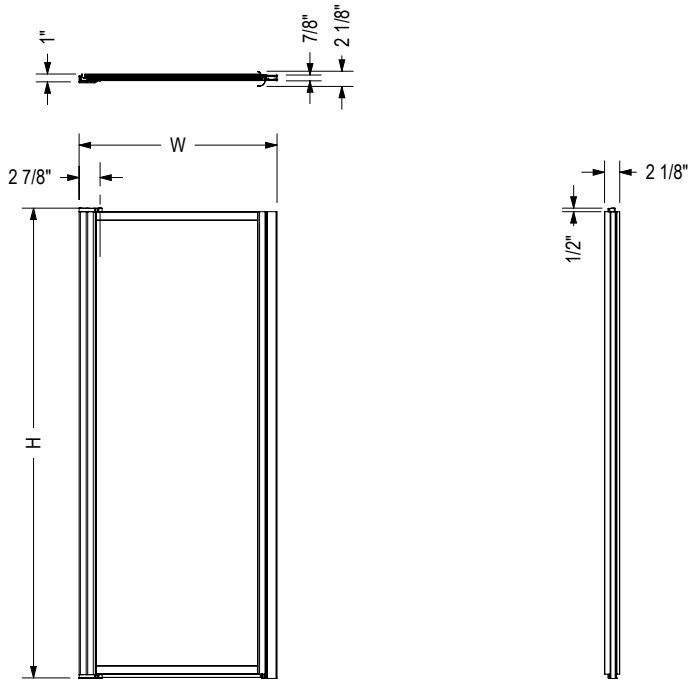

Code	Description	H	W
136730	Door Polar Pivot 27" - 28 3/4"	64 1/2"	27" - 28 3/4"
136732	Door Polar Pivot 29" - 30 3/4"	64 1/2"	29" - 30 3/4"
136731	Door Polar Pivot 31" - 32 3/4"	64 1/2"	31" - 32 3/4"
136733	Door Polar Pivot 33" - 34 3/4"	64 1/2"	33" - 34 3/4"

All dimensions are approximate. Structure measurements must be verified against the unit to ensure proper fit.

Go to Table of Contents

Reveal 71 Shower Doors

Material : Tempered Glass

Features

- 8 mm tempered glass panels
- Available in 3 finishes: Chrome, Brushed Nickel, Matte Black to match your bathroom
- Pivoting door provides a wide opening for ease of access in and out of the shower
- The frameless design brings a sense of spaciousness to the room and creates a sleek, minimalist look
- Reversible, allowing for left or right opening to accommodate different bathroom layouts
- 3 in. of lateral adjustment to fit many shower opening
- Proudly made in Canada
- Warranty: 10 years
- MAAX shower doors come with a proven history of quality and style, leading the market in bathware solutions

REVEAL 71 44-47 X 71 ½ - 8MM - 136671

SKU	Glass / Finish	Dimensions & Weight	Packaging	MSRP
136671-900-084-000	Clear / Chrome	44” - 47” x 71 1/2” / 118 lb	5.22 ft³	$ 1369
136671-900-173-000	Clear / Dark Bronze			$ 1472
136671-900-305-000	Clear / Brushed Nickel			$ 1436

REVEAL 71 56-59 X 71 ½ - 8MM - 136672

SKU	Glass / Finish	Dimensions & Weight	Packaging	MSRP
136672-900-084-000	Clear / Chrome	56” - 59” x 71 1/2” / 142 lb	5.22 ft³	$ 1505
136672-900-173-000	Clear / Dark Bronze			$ 1608
136672-900-305-000	Clear / Brushed Nickel			$ 1575

REVEAL 71 32 ½-35 ½ X 71 ½ - 8MM - 136676

SKU	Glass / Finish	Dimensions & Weight	Packaging	MSRP
136676-900-084-000	Clear / Chrome	32 1/2” - 35 1/2” x 71 1/2” / 110 lb	5.2 ft³	$ 1233
136676-900-173-000	Clear / Dark Bronze	32 1/2” - 35 1/2” x 71 1/2” / 100 lb		$ 1335
136676-900-305-000	Clear / Brushed Nickel			$ 1301

REVEAL 71 41 ½-44 ½ X 71 ½ - 8MM - 136677

SKU	Glass / Finish	Dimensions & Weight	Packaging	MSRP
136677-900-084-000	Clear / Chrome	41 1/2” - 44 1/2” x 71 1/2” / 121 lb	5.2 ft³	$ 1335
136677-900-173-000	Clear / Dark Bronze	41 1/2” - 44 1/2” x 71 1/2” / 111 lb		$ 1436
136677-900-305-000	Clear / Brushed Nickel			$ 1405

REVEAL 71 38-41 X 71 ½ - 8 MM - 136679

SKU	Glass / Finish	Dimensions & Weight	Packaging	MSRP
136679-900-084-000	Clear / Chrome	38” - 41” x 71 1/2” / 114 lb	5.2 ft³	$ 1301
136679-900-173-000	Clear / Dark Bronze	38” - 41” x 71 1/2” / 104 lb		$ 1405
136679-900-305-000	Clear / Brushed Nickel			$ 1369

REVEAL 71 51 ½-54 ½ X 71 ½ - 8MM - 136883

SKU	Glass / Finish	Dimensions & Weight	Packaging	MSRP
136883-900-084-000	Clear / Chrome	51 1/2” - 54 1/2” x 71 1/2” / 142 lb	5.2 ft³	$ 1429
136883-900-173-000	Clear / Dark Bronze	51 1/2” - 54 1/2” x 71 1/2” / 132 lb		$ 1532

REVEAL 71 51 ½-54 ½ X 71 ½ - 8MM - 136883

SKU	Glass / Finish	Dimensions & Weight	Packaging	MSRP
136883-900-305-000	Clear / Brushed Nickel	51 1/2” - 54 1/2” x 71 1/2” / 132 lb	5.2 ft^3	$ 1498

STANDARD

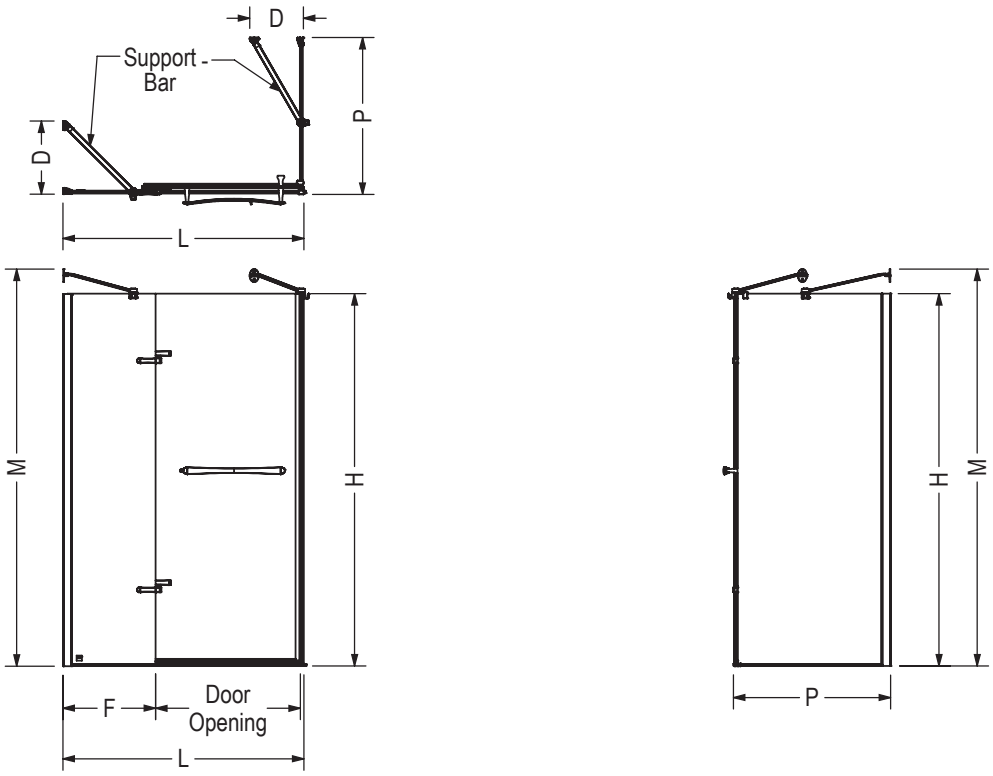

Code	Description	H	M	L Adjustable	F	P Adjustable	D Adjustable	Door Opening	Wall Adjustment	Support Bar
136676	Reveal 71.5 x 32.5"- 35.5"	71 1/2"	76 1/4"	32.5" - 35.5"	6 1/4"			23" - 26"	3/4"	
136679	Reveal 71.5 x 38" - 41"	71 1/2"	76 1/4"	38" - 41"	11 3/4"			23" - 26"	3/4"	
136677	Reveal 71.5 x 41.5"- 44.5"	71 1/2"	76 1/4"	41.5" - 44.5"	15 1/4"			23" - 26"	3/4"	
136671	Reveal 71.5 x 44"- 47"	71 1/2"	76 1/4"	44" - 47"	17 1/4"		9" - 15"	23" - 26"	3/4"	X
136883	Reveal 71.5 x 51.5" - 54.5"	71 1/2"	76 1/4"	51.5" - 54.5"	25 1/4"		9" - 15"	23" - 26"	3/4"	X
136672	Reveal 71.5 x 56"- 59"	71 1/2"	76 1/4"	56" - 59"	30"		9" - 15"	23" - 26"	3/4"	X
136673	Return Panel 32"	71 1/2"	76 1/4"			29 7/8"	9" - 15"		3/4"	X
136674	Return Panel 34"	71 1/2"	76 1/4"			31 7/8"	9" - 15"		3/4"	X
136675	Return Panel 36"	71 1/2"	76 1/4"			33 7/8"	9" - 15"		3/4"	X

All dimensions are approximate. Structure measurements must be verified against the unit to ensure proper fit.

Go to Table of Contents

Reveal Sleek 71 Shower Doors

Material : Glass

Features

- Wide opening for comfortable access
- Strongly built sill, permanently fixed on the base, better water barrier
- Hinge with patent mechanism that offers 3 in. of lateral adjustment
- Additional 3/4 in. of out-of-plumb adjustment
- Header-less door, no height restriction
- New design, 1 7/8 in. deep, makes it compatible with many bases and tile solutions
- Magnetized closure provides watertightness solution
- Combine with a Reveal Sleek Return Panel, for a corner shower solution
- The minimalist design adds a touch of sophistication to any bathroom décor

REVEAL SLEEK 71 32 1/2-35 1/2 X 71 1/2 - 8MM - 139575

SKU	Glass / Finish	Dimensions & Weight	Packaging	MSRP
139575-900-084-000	Clear / Chrome	32 1/2” - 35 1/2” x 71 1/2” / 80 lb	57 ft^3	$ 1264
139575-900-173-000	Clear / Dark Bronze			$ 1359
139575-900-305-000	Clear / Brushed Nickel			$ 1328
139575-900-340-000	Clear / Matte Black			$ 1359

REVEAL SLEEK 71 38-41 X 71 1/2 - 8MM - 139576

SKU	Glass / Finish	Dimensions & Weight	Packaging	MSRP
139576-900-084-000	Clear / Chrome	38” - 41” x 71 1/2” / 90 lb	51 ft^3	$ 1334
139576-900-173-000	Clear / Dark Bronze			$ 1435
139576-900-305-000	Clear / Brushed Nickel			$ 1401
139576-900-340-000	Clear / Matte Black			$ 1435

REVEAL SLEEK 71 41 1/2-44 1/2 X 71 1/2 - 8MM - 139577

SKU	Glass / Finish	Dimensions & Weight	Packaging	MSRP
139577-900-084-000	Clear / Chrome	41 1/2” - 44 1/2” x 71 1/2” / 98 lb	5.51 ft^3	$ 1369
139577-900-173-000	Clear / Dark Bronze			$ 1472
139577-900-305-000	Clear / Brushed Nickel			$ 1436
139577-900-340-000	Clear / Matte Black			$ 1472

REVEAL SLEEK 71 44-47 X 71 1/2 - 8MM - 139578

SKU	Glass / Finish	Dimensions & Weight	Packaging	MSRP
139578-900-084-000	Clear / Chrome	44” - 47” x 71 1/2” / 102 lb	5.1 ft^3	$ 1405
139578-900-173-000	Clear / Dark Bronze			$ 1508
139578-900-305-000	Clear / Brushed Nickel			$ 1473
139578-900-340-000	Clear / Matte Black			$ 1508

REVEAL SLEEK 71 51 1/2-54 1/2 X 71 1/2 - 8MM - 139579

SKU	Glass / Finish	Dimensions & Weight	Packaging	MSRP
139579-900-084-000	Clear / Chrome	51 1/2” - 54 1/2” x 71 1/2” / 117 lb	51 ft^3	$ 1468
139579-900-173-000	Clear / Dark Bronze			$ 1578
139579-900-305-000	Clear / Brushed Nickel			$ 1543
139579-900-340-000	Clear / Matte Black			$ 1578

REVEAL SLEEK 71 56-59 X 71 1/2 - 8MM - 139580

SKU	Glass / Finish	Dimensions & Weight	Packaging	MSRP
139580-900-084-000	Clear / Chrome	56” - 59” x 71 1/2” / 126 lb	5.51 ft^3	$ 1545
139580-900-173-000	Clear / Dark Bronze			$ 1659
139580-900-305-000	Clear / Brushed Nickel			$ 1622
139580-900-340-000	Clear / Matte Black			$ 1659

STANDARD

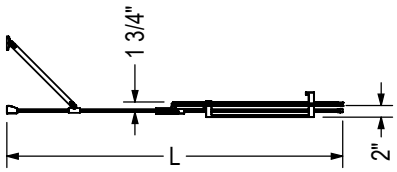

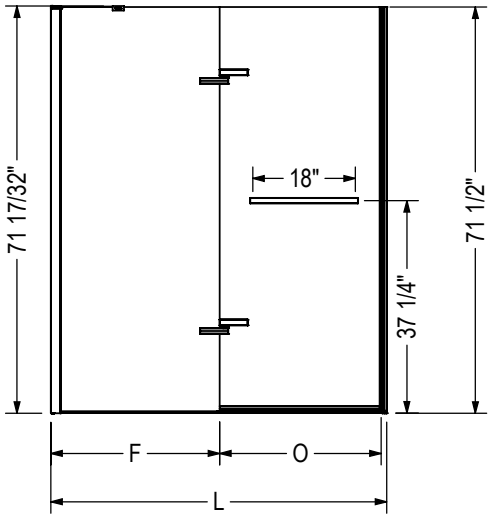

Code	Description	L	F	O
139575	Reveal Sleek 71 1/2" x 32 1/2" - 35 1/2"	32 1/2" - 35 1/2"	5 3/8"	23 3/4" - 26 3/4"
139576	Reveal Sleek 71 1/2" x 38" - 41"	38" - 41"	10 7/8"	23 3/4" - 26 3/4"
139577	Reveal Sleek 71 1/2" x 41 1/2" - 44 1/2"	41 1/2" - 44 1/2"	14 3/8"	23 3/4" - 26 3/4"
139578	Reveal Sleek 71 1/2" x 44" - 47"	44" - 47"	16 7/8"	23 3/4" - 26 3/4"
139579	Reveal Sleek 71 1/2" x 51 1/2" - 54 1/2"	51 1/2" - 54 1/2"	24 3/8"	23 3/4" - 26 3/4"
139580	Reveal Sleek 71 1/2" x 56" - 59"	56" - 59"	28 7/8"	23 3/4" - 26 3/4"

- Wall adjustment = 3/4"

All dimensions are approximate. Structure measurements must be verified against the unit to ensure proper fit.

Uptown Pivot Shower Doors

Material : Tempered Glass

Features

- 8 mm (5/16") tempered glass
- 76in high clear glass panel (Walkthrough 73-7/8in)
- Thin header structure for a minimalist look
- Handle available in Stylish fashion mixed material finish
- Designed in North America
- DIY Product for an easy installation
- Pivoting doors provide a wide opening for ease of access in and out of the shower
- 16 in. long handle provides an heavy feel & elegance
- 1/2" out-of-plumb adjustment

UPTOWN 45-47 X 76 IN. 8 MM - 135325

SKU	Glass / Finish	Dimensions & Weight	Packaging	MSRP
135325-900-084-000	Clear / Chrome	45" - 47" x 76" / 111 lb	68 ft³	$ 1547
135325-900-173-000	Clear / Dark Bronze			$ 1661
135325-900-282-000	Clear / Chrome and White Marble			$ 1621
135325-900-283-000	Clear / Dark Bronze and Beige Marble			$ 1735
135325-900-285-000	Clear / Matte Black and Wood			$ 1735
135325-900-305-000	Clear / Brushed Nickel			$ 1629
135325-900-340-000	Clear / Matte Black			$ 1661

UPTOWN 57-59 X 76 IN. 8 MM - 135326

SKU	Glass / Finish	Dimensions & Weight	Packaging	MSRP
135326-900-084-000	Clear / Chrome	57" - 59" x 76" / 139 lb	117 ft³	$ 1642
135326-900-173-000	Clear / Dark Bronze			$ 1765
135326-900-282-000	Clear / Chrome and White Marble			$ 1716
135326-900-283-000	Clear / Dark Bronze and Beige Marble			$ 1840
135326-900-285-000	Clear / Matte Black and Wood			$ 1840
135326-900-305-000	Clear / Brushed Nickel			$ 1723
135326-900-340-000	Clear / Matte Black			$ 1765

ACCESSORIES

SKU	Description	MSRP
10068840-282-600	Mixed Finish Replacement Handle for Uptown Pivot and Slider. Available finishes: Chrome and White Marble **(282)**, Dark Bronze and Beige Marble **(283)**, Matte Black and Wood **(285)**	$ 89
10068840-283-600		$ 89
10068840-285-600		$ 89

STANDARD

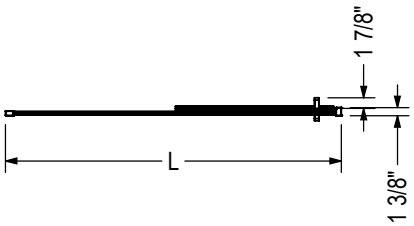

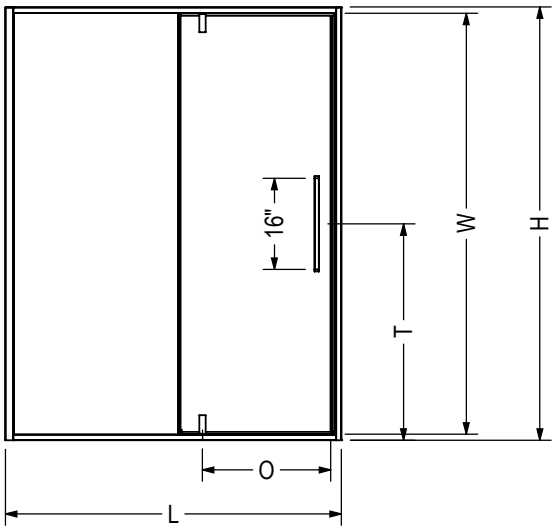

Code	Description	H	L	O	T	W
135325	Uptown Pivot 76" x 45" - 47"	76"	45" - 47"	22 3/4"	38"	73 7/8"
135326	Uptown Pivot 76" x 57" - 59"	76"	57" - 59"	22 3/4"	38"	73 7/8"

Wall adjustment = 1/2"

All dimensions are approximate. Structure measurements must be verified against the unit to ensure proper fit.

Edge Duo Shower Screen

Material : Tempered Glass

Features

- Thin interface makes it compatible with most standard tubs, offering flexibility for remodels or upgrades
- Double glass; 1 fixed panel 24 in. and 1 pivoting panel 18 in. this gives you a wide access to get in and out while making the corner watertight
- Easy access to faucets
- Space-saving design makes it perfect for compact bathrooms without compromising on functionality or style
- Frameless 8 mm tempered glass with a square pivot
- Fast and easy installation with a low number of parts
- Reversible, allowing for left or right opening to accommodate different bathroom layouts.
- The moving panel can tilt slightly inside the tub to prevent water spill
- Lotus super-hydrophobic easy clean glass protection included, to make cleaning a breeze

EDGE DUO 42 X 75 - 8MM - 137504

SKU	Color	Dimensions & Weight	Packaging	MSRP
137504-900-084-000	Clear / Chrome	41” - 42” x 75” / 67 lb	3.46 ft^3	$ 1222
137504-900-305-000	Clear / Brushed Nickel			$ 1312

STANDARD

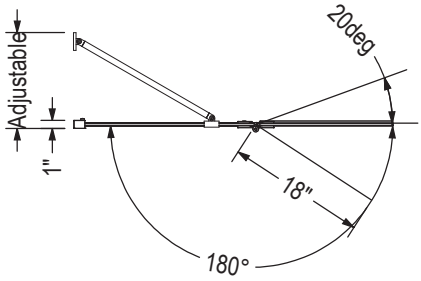

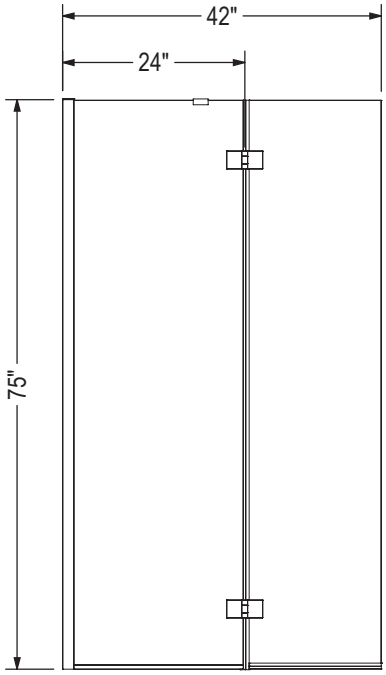

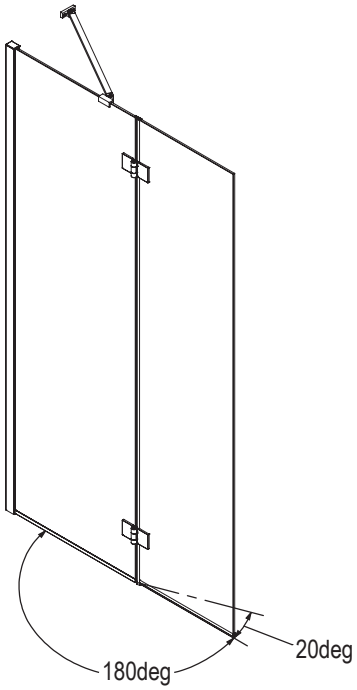

Code	Description	Wall Adjustment
137504	EDGE Duo Shower 42" X 75"	3/8"

All dimensions are approximate. Structure measurements must be verified against the unit to ensure proper fit.

Capella Return Panels

Material : Tempered Glass

Features

- GlassShield® technology pre-installed - provides extra layer of security for homes with children or elderly residents
- 8 mm (5/16 in.) tempered glass with a height of 78 in.
- Includes a support arm to stabilize the panel
- 3 finishes: Chrome, Brushed Nickel and Matte Black
- Can be installed on the left or right side
- Offered in 32 and 36 in. wide to fit standard bases dimensions

CAPELLA 78 RETURN PANEL FOR 32 IN. - 139588

SKU	Color	Dimensions & Weight	MSRP
139588-810-084-000	Clear with GlassShield / Chrome	29 5/8” - 30 5/8” x 78” / 77 lb	$ 772
139588-810-305-000	Clear with GlassShield / Brushed Nickel		$ 827
139588-810-340-000	Clear with GlassShield / Matte Black		$ 864

CAPELLA 78 RETURN PANEL FOR 36 IN. - 139590

SKU	Color	Dimensions & Weight	Packaging	MSRP
139590-810-084-000	Clear with GlassShield / Chrome	33 5/8” - 34 5/8” x 78” / 75 lb	5.35 ft^3	$ 816
139590-810-305-000	Clear with GlassShield / Brushed Nickel			$ 875
139590-810-340-000	Clear with GlassShield / Matte Black			$ 915

STANDARD

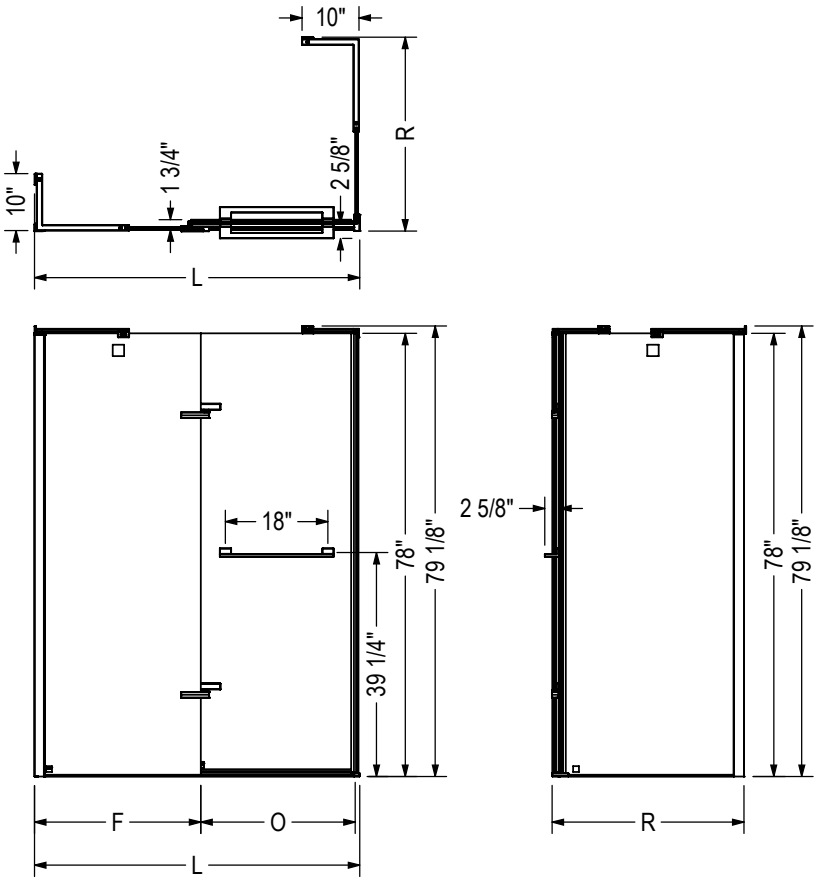

Code	Description	L	F	R	O
139584	Capella 78" x 32 1/2" - 35 1/2"	32 1/2" - 35 1/2"	5 3/8"	-	23 3/4" - 26 3/4"
139586	Capella 78" x 44" - 47"	44" - 47"	16 7/8"	-	23 3/4" - 26 3/4"
139587	Capella 78" x 56" - 59"	56" - 59"	28 7/8"	-	23 3/4" - 26 3/4"
139588	Capella Return Panel 32"	-	-	29 11/16" - 30 11/16"	-
139590	Capella Return Panel 36"	-	-	33 11/16" - 34 11/16"	-

- Wall adjustment door = 3/4"
- Wall adjustment return panel = 1"

All dimensions are approximate. Structure measurements must be verified against the unit to ensure proper fit.

Duel Alto Return Panels

Material : Tempered Glass

Features

- 8mm (5/16 in) tempered certified glass panel
- 78in high clear glass panel
- Glass panels come with the Lotus Easy Clean Glass Protection to repel soap and water stains for carefree maintenance
- Configuration consists of a single panel to be combined with a Duel Alto shower door
- For corner showers and for tile or pre-cast wall installations 78” and higher. For an optimal fit we recommand the Duel Alto collection doors.
- Reversible panel for easy corner installation on the left or on the right
- Out of plumb adjustment in the wall profile
- GlassShield® technology pre-installed - provides extra layer of security for homes with children or elderly residents
- Due to the weight and height of the glass, we recommend a 2 person team to install this product

DUEL ALTO RETURN PANEL 32 X 78 - 8 MM - 139953

SKU	Color	Dimensions & Weight	MSRP
139953-810-084-000	Clear with GlassShield / Chrome	30” - 31” x 78” / 65 lb	$ 772
139953-810-305-000	Clear with GlassShield / Brushed Nickel		$ 827
139953-810-340-000	Clear with GlassShield / Matte Black		$ 864

DUEL ALTO RETURN PANEL 36 X 78 - 8 MM - 139954

SKU	Color	Dimensions & Weight	MSRP
139954-810-084-000	Clear with GlassShield / Chrome	35” - 34” x 78” / 75 lb	$ 816
139954-810-305-000	Clear with GlassShield / Brushed Nickel		$ 875
139954-810-340-000	Clear with GlassShield / Matte Black		$ 915

STANDARD

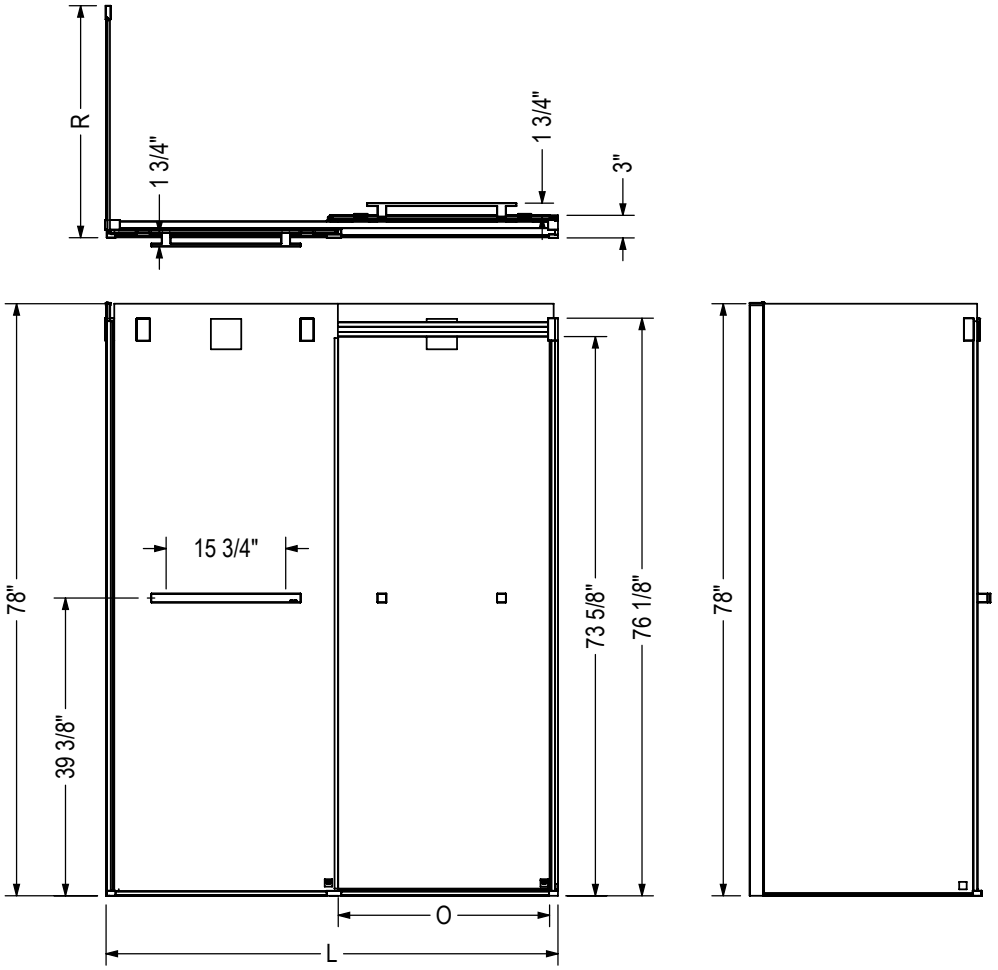

Code	Description	L	O	R
136955	Duel Alto Bypass 56" - 59" x 78"	56" - 59"	24 1/2" - 27 1/2"	-
136956	Duel Alto Bypass 44" - 47" x 78"	44" - 47"	18 1/2" - 21 1/2"	
136953	Duel Alto Return Panel 32"	-	-	30" - 31"
136954	Duel Alto Return Panel 36"			34" - 35"

All dimensions are approximate. Structure measurements must be verified against the unit to ensure proper fit.

- Wall adjustment door = 1/2"
- Wall adjustment return panel = 1"

Nebula Return Panel

Material : Tempered Glass

Features

- 8 mm (5/16 in.) tempered glass with a height of 78 3/4 in.
- Lotus easy clean protection for effortless maintenance
- Return panel for 36” wide shower bases
- Add 1 return panel to a Nebula sliding alcove door for a corner unit
- 3 finishes: Chrome, Brushed Nickel, Matte Black

NEBULA RETURN PANEL FOR 36 IN. - 135865

SKU	Color	Dimensions & Weight	Packaging	MSRP
135865-900-084-000	Clear / Chrome	34 1/4” - 35” x 78 3/4” / 83 lb	5 ft^3	$ 666
135865-900-305-000	Clear / Brushed Nickel			$ 693
135865-900-340-000	Clear / Matte Black			$ 714

STANDARD

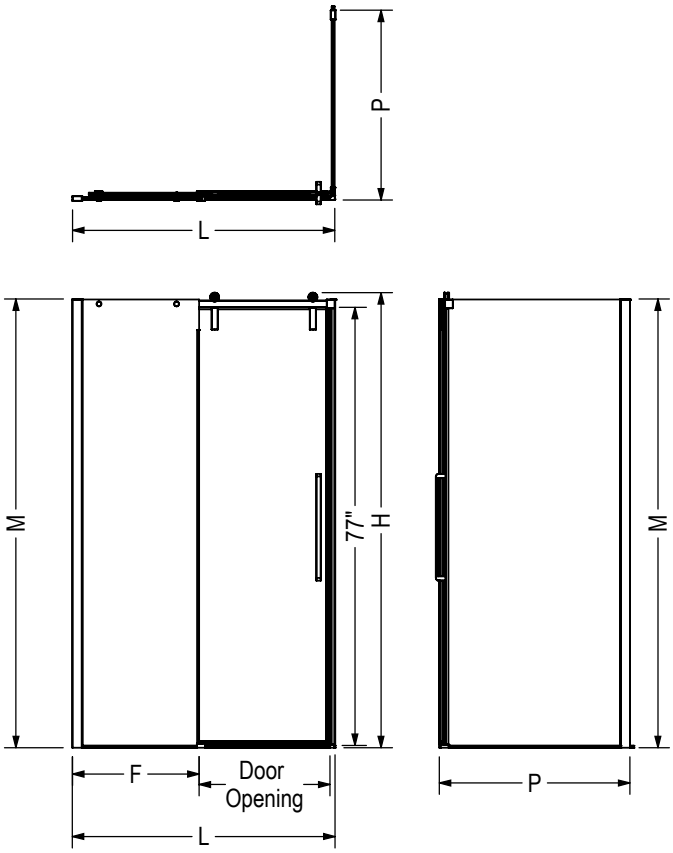

Code	Description	H	M	L Adjustable	F	P Adjustable	Door Opening	Wall Adjustment
135870	Nebula 44 1/2" x 46 1/2" x 78 3/4"	80"	78 3/4"	44 1/2" - 46 1/2"	21 1/2"	-	17 1/8" - 19 1/8"	3/4"
135875	Nebula 56 1/2" x 58 1/2" x 78 3/4"	80"	78 3/4"	56 1/2" - 58 1/2"	27 1/2"	-	23 1/8" - 25 1/8"	3/4"
135865	Return Panel 36"	80"	78 3/4"	-	-	34 1/4" - 35"	-	3/4"

All dimensions are approximate. Structure measurements must be verified against the unit to ensure proper fit.

Connect Pro Return Panels

Material : Tempered Glass

Features

- Configuration consists of a Stationary Panel to be combined with a Connect Pro shower door
- Frame and hardware finish: Chrome
- For corner showers and for tile or pre-cast wall installations 76” and higher, we suggest Connect Pro doors.
- Requires no cutting the door frame expands to adjust to the walls
- 1/4in (6mm) Glass panels come with the Lotus Easy Clean Glass Protection to repel soap and water stains for carefree maintenance
- Designed in North America
- Pre-installed aluminum profile on return panels
- Fast, no-cut installation
- Out of plumb adjustment in the wall profile

CONNECT PRO RETURN PANEL 32 X 76 - 6MM - 135239

SKU	Color	Dimensions & Weight	Packaging	MSRP
135239-900-084-000	Clear / Chrome	30 1/8” - 30 7/8” x 76” / 57 lb	7.31 ft^3	$ 399
135239-900-340-000	Clear / Matte Black			$ 478

CONNECT PRO RETURN PANEL 36 X 76 - 6MM - 135240

SKU	Color	Dimensions & Weight	Packaging	MSRP
135240-900-084-000	Clear / Chrome	34 1/8” - 34 7/8” x 76” / 65 lb	8.34 ft^3	$ 433
135240-900-340-000	Clear / Matte Black			$ 516

STANDARD

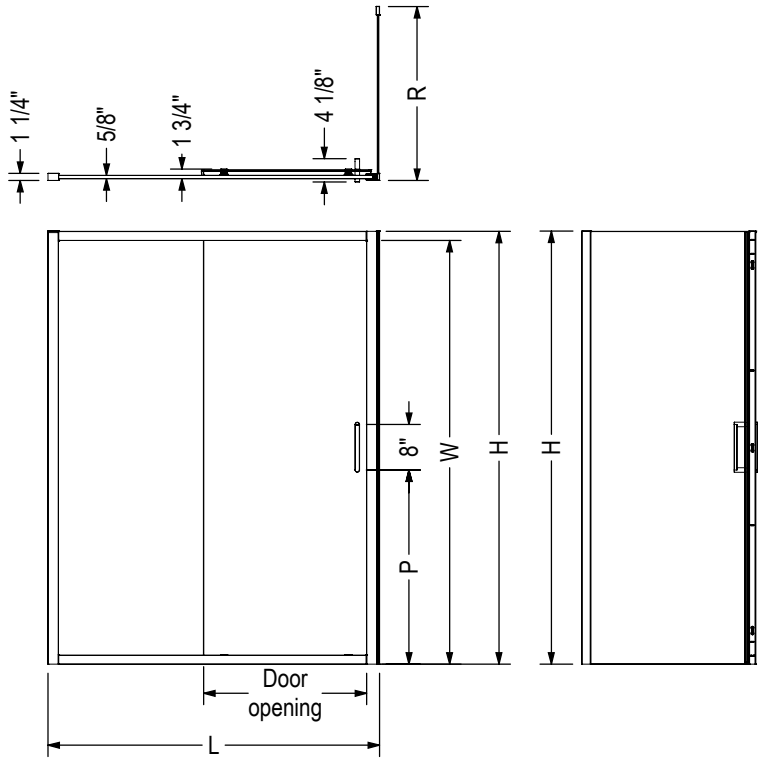

Code	Description	H	W	L Adjustable	Door opening	P	R
135235	Connect Pro 76" x 43 1/2" - 45"	76"	74 3/8"	43 1/2" - 45"	17 13/16" - 18 9/16"	34 1/8"	-
135236	Connect Pro 76" x 45" - 46 1/2"	76"	74 3/8"	45" - 46 1/2"	18 9/16" - 19 5/16"	34 1/8"	-
135237	Connect Pro 76" x 55 1/2" - 57"	76"	74 3/8"	55 1/2" - 57"	23 13/16" - 24 9/16"	34 1/8"	-
135238	Connect Pro 76" x 57" - 58 1/2"	76"	74 3/8"	57" - 58 1/2"	24 9/16" - 25 5/16"	34 1/8"	-
135239	Connect Pro Return panel 32"	76"	-	-	-	-	30 1/8" - 30 7/8"
135240	Connect Pro Return panel 36"	76"	-	-	-	-	34 1/8" - 34 1/8"

All dimensions are approximate. Structure measurements must be verified against the unit to ensure proper fit.

- Wall adjustment return panel = 3/4"

Halo Pro GS Return Panels

Material : Tempered Glass

Features

- 8 mm tempered glass panels with MAAX new Shatter-Resistant Technology, GlassShield®
- Available in 2 finishes: Chrome and Matte Black
- Return Panel for Corner Shower, compatible with Halo Pro GlassShield® (GS)
- The frameless design brings a sense of spaciousness to the room and creates a sleek, minimalist look
- Reversible panel for easy corner installation on the left or on the right
- Glass panels come with the Lotus Easy Clean Glass Protection to repel soap and water stains for carefree maintenance
- Easy assembly between door and return panel
- Compatible with MAAX's Utile wall system, allowing for a seamless and coordinated installation with the shower door, creating a cohesive and stylish bathroom design
- Warranty: 10 years

HALO PRO GS RETURN PANEL FOR 32 IN. - 136542

SKU	Color	Dimensions & Weight	Packaging	MSRP
136542-810-084-000	Clear with GlassShield / Chrome	28 3/4" - 29 7/8" x 78 3/4" / 52 lb	4.67 ft^3	$ 772
136542-810-340-000	Clear with GlassShield / Matte Black			$ 864

HALO PRO GS RETURN PANEL FOR 36 IN. - 136543

SKU	Color	Dimensions & Weight	Packaging	MSRP
136543-810-084-000	Clear with GlassShield / Chrome	32 3/4" - 33 7/8" x 78 3/4" / 62 lb	5.34 ft^3	$ 816
136543-810-340-000	Clear with GlassShield / Matte Black			$ 915

STANDARD

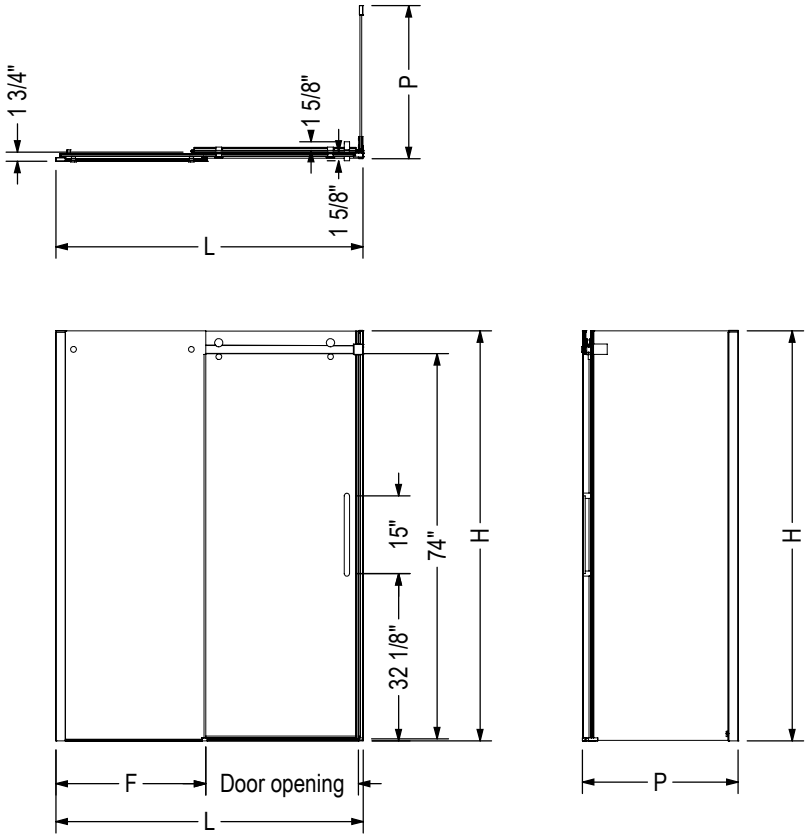

Code	Description	H	L Adjustable	F	P Adjustable	Door Opening	Wall Adjustment
136540	Halo Pro GS 78 3/4" x 47"	78 3/4"	44 1/2" - 47"	22 1/2"	-	16 1/4" - 18 3/4"	1"
136541	Halo Pro GS 78 3/4" x 59"	78 3/4"	56 1/2" - 59"	28 5/8"	-	22 1/8" - 24 5/8"	1"
136542	Halo Pro GS RP 32"	78 3/4"	-	-	29 7/8"	-	1"
136543	Halo Pro GS RP 36"	78 3/4"	-	-	33 7/8"	-	1"

All dimensions are approximate. Structure measurements must be verified against the unit to ensure proper fit.

Duel and Inverto Return Panels

Material : Tempered Glass

Features

- Configuration consists of a single panel to be combined with a Duel or Inverto shower door
- For corner showers and for tile or pre-cast wall installations 74” and higher
- 74in high clear glass panel
- 8mm (5/16 in) tempered certified glass panel
- Glass panels come with the Lotus Easy Clean Glass Protection to repel soap and water stains for carefree maintenance
- Reversible panel for easy corner installation on the left or on the right
- Out-of-plumb adjustment in the wall profile
- Easy assembly between door and return panel
- Due to the weight and height of the glass, we recommend a 2 person team to install this product

DUEL AND INVERTO RETURN PANEL 32 - 8 MM - 137310

SKU	Color	Dimensions & Weight	Packaging	MSRP
137310-900-084-000	Clear / Chrome	30 1/4” - 31” x 74” / 56 lb	3.71 ft^3	$ 491
137310-900-173-000	Clear / Dark Bronze			$ 568
137310-900-305-000	Clear / Brushed Nickel			$ 530
137310-900-340-000	Clear / Matte Black			$ 568

DUEL AND INVERTO RETURN PANEL 36 - 8 MM - 137311

SKU	Color	Dimensions & Weight	MSRP
137311-900-084-000	Clear / Chrome	34 1/4” - 35” x 74” / 70 lb	$ 563
137311-900-173-000	Clear / Dark Bronze		$ 647
137311-900-305-000	Clear / Brushed Nickel		$ 605

DUEL AND INVERTO RETURN PANEL 34 - 8 MM - 137312

SKU	Color	Dimensions & Weight	Packaging	MSRP
137312-900-084-000	Clear / Chrome	32 1/4” - 33” x 74” / 63 lb	4.41 ft^3	$ 529
137312-900-173-000	Clear / Dark Bronze			$ 611
137312-900-305-000	Clear / Brushed Nickel			$ 563

STANDARD

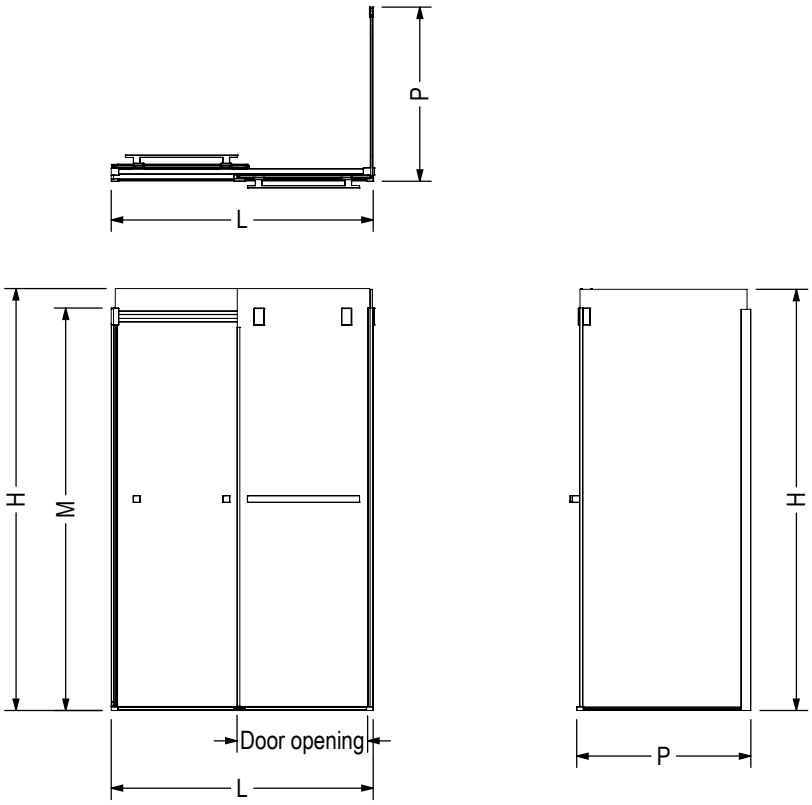

Code	Description	H	M	L Adjustable	P Adjustable	Door Opening	Wall Adjustment
136271	Duel 44" - 47" x 70 1/2"	74"	70 1/2"	44" - 47"	-	18 1/2" - 21 1/2"	3/4"
136272	Duel 56" - 59" x 70 1/2"	74"	70 1/2"	56" - 59"	-	24 1/2" - 27 1/2"	3/4"
138761	Inverto 44" - 47" x 70 1/2"	74"	70 1/2"	44" - 47"	-	18 1/2" - 21 1/2"	3/4"
138762	Inverto 56" - 59" x 70 1/2"	74"	70 1/2"	56" - 59"	-	24 1/2" - 27 1/2"	3/4"
137310	Return Panel 74 for 32"	74"	70 1/2"	-	30 1/4" - 31"	-	3/4"
137312	Return Panel 74 for 34"	74"	70 1/2"	-	32 1/4" - 33"	-	3/4"
137311	Return Panel 74 for 36"	74"	70 1/2"	-	34 1/4" - 35"	-	3/4"

All dimensions are approximate. Structure measurements must be verified against the unit to ensure proper fit.

Go to Table of Contents

Halo Return Panels

Material : Tempered Glass

Features

- 8 mm tempered glass panels
- Available in 4 finishes: Chrome, Brushed Nickel, Dark Bronze, Matte Black
- Return Panel for Corner Shower, compatible with Halo, Halo Pro and Vela doors
- The frameless design brings a sense of spaciousness to the room and creates a sleek, minimalist look
- Reversible panel for easy corner installation on the left or on the right
- Glass panels come with the Lotus Easy Clean Glass Protection to repel soap and water stains for carefree maintenance
- Easy assembly between door and return panel
- Compatible with MAAX's Utile wall system, allowing for a seamless and coordinated installation with the shower door, creating a cohesive and stylish bathroom design
- Warranty: 10 years

HALO RETURN PANEL FOR 30 IN. - 139393

SKU	Color	Dimensions & Weight	Packaging	MSRP
139393-900-084-000	Clear / Chrome	26 3/4" - 27 7/8" x 78 3/4" / 60 lb	4.87 ft^3	$ 691
139393-900-173-000	Clear / Dark Bronze			$ 781
139393-900-305-000	Clear / Brushed Nickel			$ 744
139393-900-340-000	Clear / Matte Black			$ 781

HALO RETURN PANEL FOR 42 IN. - 139394

SKU	Color	Dimensions & Weight	Packaging	MSRP
139394-900-084-000	Clear / Chrome	38 7/8" - 39 7/8" x 78 3/4" / 82 lb	6.79 ft^3	$ 784
139394-900-173-000	Clear / Dark Bronze			$ 882
139394-900-305-000	Clear / Brushed Nickel			$ 843
139394-900-340-000	Clear / Matte Black			$ 882

HALO RETURN PANEL FOR 34 IN. - 139395

SKU	Color	Dimensions & Weight	Packaging	MSRP
139395-900-084-000	Clear / Chrome	30 7/8" - 31 7/8" x 78 3/4" / 68 lb	6 ft^3	$ 737
139395-900-173-000	Clear / Dark Bronze			$ 829
139395-900-305-000	Clear / Brushed Nickel			$ 791
139395-900-340-000	Clear / Matte Black			$ 829

HALO RETURN PANEL FOR 36 IN. - 139396

SKU	Color	Dimensions & Weight	Packaging	MSRP
139396-900-084-000	Clear / Chrome	32 7/8" - 33 7/8" x 78 3/4" / 72 lb	6.51 ft^3	$ 758
139396-900-173-000	Clear / Dark Bronze			$ 856
139396-900-305-000	Clear / Brushed Nickel			$ 815
139396-900-340-000	Clear / Matte Black			$ 856

HALO RETURN PANEL FOR 32 IN. - 139998

SKU	Color	Dimensions & Weight	Packaging	MSRP
138998-900-084-000	Clear / Chrome	28 3/4" - 29 7/8" x 78 3/4" / 131 lb	7.7 ft^3	$ 714
138998-900-173-000	Clear / Dark Bronze	28 3/4" - 29 7/8" x 78 3/4" / 118 lb		$ 804

HALO RETURN PANEL FOR 32 IN. - 139998

SKU	Color	Dimensions & Weight	Packaging	MSRP
138998-900-305-000	Clear / Brushed Nickel	28 3/4” - 29 7/8” x 78 3/4” / 118 lb	7.7 ft^3	$ 767
138998-900-340-000	Clear / Matte Black			$ 804

STANDARD

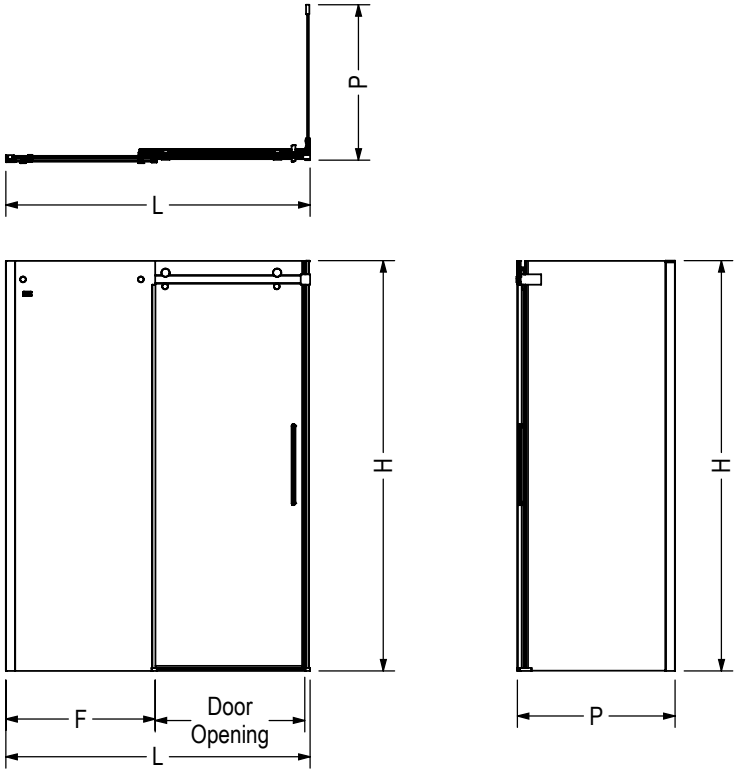

Code	Description	H	L Adjustable	F	P Adjustable	Door Opening	Wall Adjustment
138996	Halo 78 3/4" x 47"	78 3/4"	44 1/2" - 47"	22 1/2"	-	16 1/4" - 18 3/4"	1"
138997	Halo 78 3/4" x 59"	78 3/4"	56 1/2" - 59"	28 5/8"	-	22 1/8" - 24 5/8"	1"
139393	Return Panel 30"	78 3/4"	-	-	27 7/8"	-	1"
138998	Return Panel 32"	78 3/4"	-	-	29 7/8"	-	1"
139395	Return Panel 34"	78 3/4"	-	-	31 7/8"	-	1"
139396	Return Panel 36"	78 3/4"	-	-	33 7/8"	-	1"
139394	Return Panel 42"	78 3/4"	-	-	39 7/8"	-	1"

All dimensions are approximate. Structure measurements must be verified against the unit to ensure proper fit.

Incognito 76 Return Panels

Material : Tempered Glass

Features

- Tempered Glass panels 5/16 in. (8 mm) with 76 in. high
- Return Panels available in 32 in. and 36 in. wide
- Add 1 return panel to a Incognito bypass alcove door for a corner unit
- 4 finishes: Chrome, Brushed Nickel, Matte Black and Shaker pattern

INCOGNITO 76 RETURN PANEL FOR 32 IN. BASE - 136560

SKU	Color	Dimensions & Weight	Packaging	MSRP
136560-900-084-000	Clear / Chrome	30” - 31” x 76” / 70 lb	5.48 ft³	$ 539
136560-900-305-000	Clear / Brushed Nickel			$ 568
136560-900-340-000	Clear / Matte Black			$ 580
136560-972-340-000	Shaker / Matte Black			$ 596

Odyssey SC Return Panel

Material : Tempered Glass

Features

- 8 mm (5/16 in) tempered certified glass panel
- Glass panels come with the Lotus Easy Clean Glass Protection to repel soap and water stains for carefree maintenance
- Reversible panel for easy corner installation on the left or on the right
- For corner showers and for tile or pre-cast wall installations 78” and higher, we suggest Odyssey SC doors.
- Out of plumb adjustment in the wall profile
- Configuration consists of a Stationary Panel to be combined with an Odyssey SC shower door
- 78” high clear glass panel
- Easy assembly between door and return panel
- Due to the weight and height of the glass, we recommend a 2 person team to install this product

ODYSSEY SC RETURN PANEL 32 X 78 - 8 MM - 137422

SKU	Color	Dimensions & Weight	Packaging	MSRP
137422-900-084-000	Clear / Chrome	57” - 59 1/2” x 78” / 65.39 lb	4.7 ft³	$ 800
137422-900-305-000	Clear / Brushed Nickel			$ 840
137422-900-340-000	Clear / Matte Black			$ 880

ODYSSEY SC RETURN PANEL 32 X 78 - 8 MM - 137422

SKU	Color	Dimensions & Weight	Packaging	MSRP
137422-900-343-000	Clear / Brushed Gold	57” - 59 1/2” x 78” / 68.39 lb	4.7 ft^3	$ 1096

STANDARD

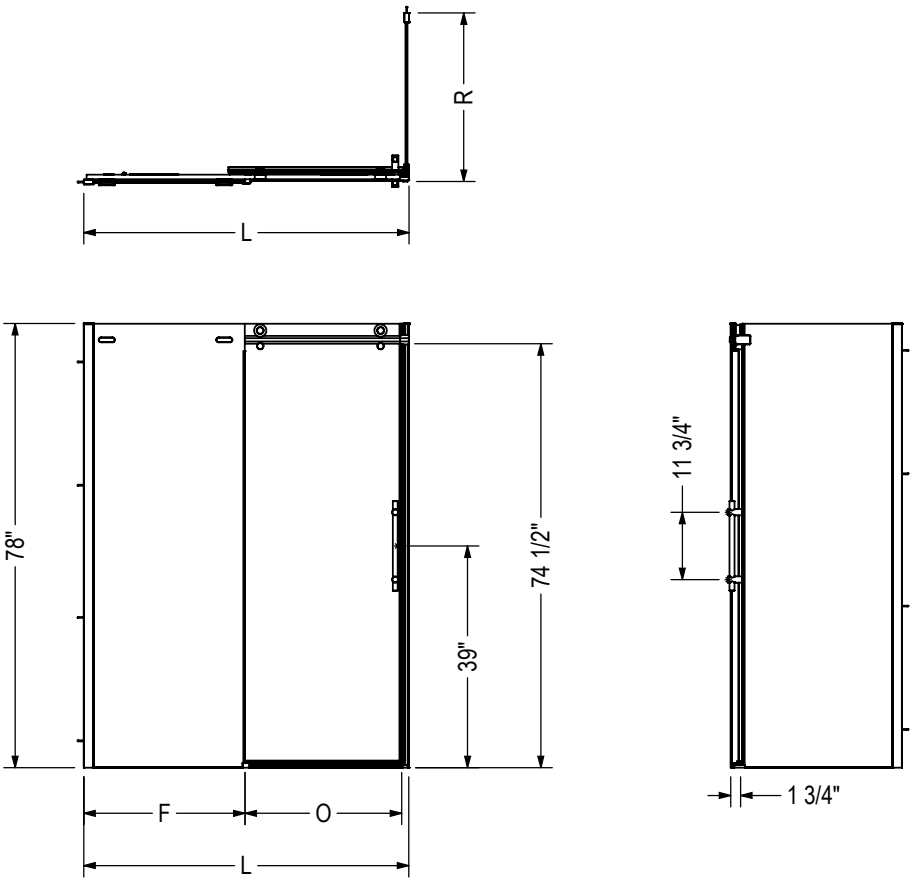

Code	Description	L Adjustable	F	O	R	Wall adjustment
137420	Odyssey Slider door 57"-59 1/2" x 78"	57" - 59 1/2"	27 7/8"	24 1/2" - 25"	-	5/8"
137421	Odyssey Slider door 45"-47 1/2" x 78"	45" - 47 1/2"	21 7/8"	18 1/4" - 18 3/4"	-	5/8"
137422	ODYSSEY RETURN PANEL 32"	-	-	-	29 3/4" - 30 1/2"	3/4"
137423	ODYSSEY RETURN PANEL 36"	-	-	-	33 3/4" - 34 1/2"	3/4"

All dimensions are approximate. Structure measurements must be verified against the unit to ensure proper fit.

Odyssey SC Return Panel 36 x 78 - 8 mm

Material : Tempered Glass

Features

- 8 mm (5/16 in) tempered certified glass panel
- Glass panels come with the Lotus Easy Clean Glass Protection to repel soap and water stains for carefree maintenance
- Reversible panel for easy corner installation on the left or on the right
- For corner showers and for tile or pre-cast wall installations 78" and higher, we suggest Odyssey SC doors.
- Out of plumb adjustment in the wall profile
- Configuration consists of a Stationary Panel to be combined with an Odyssey SC shower door
- 78" high clear glass panel
- Easy assembly between door and return panel
- Due to the weight and height of the glass, we recommend a 2 person team to install this product

ODYSSEY SC RETURN PANEL 36 X 78 - 8 MM - 137423

SKU	Color	Dimensions & Weight	Packaging	MSRP
137423-900-084-000	Clear / Chrome	33 3/4" - 34 1/2" x 78" / 75.2 lb	5.25 ft^3	$ 872
137423-900-305-000	Clear / Brushed Nickel			$ 913
137423-900-340-000	Clear / Matte Black			$ 959
137423-900-343-000	Clear / Brushed Gold			$ 1193

STANDARD

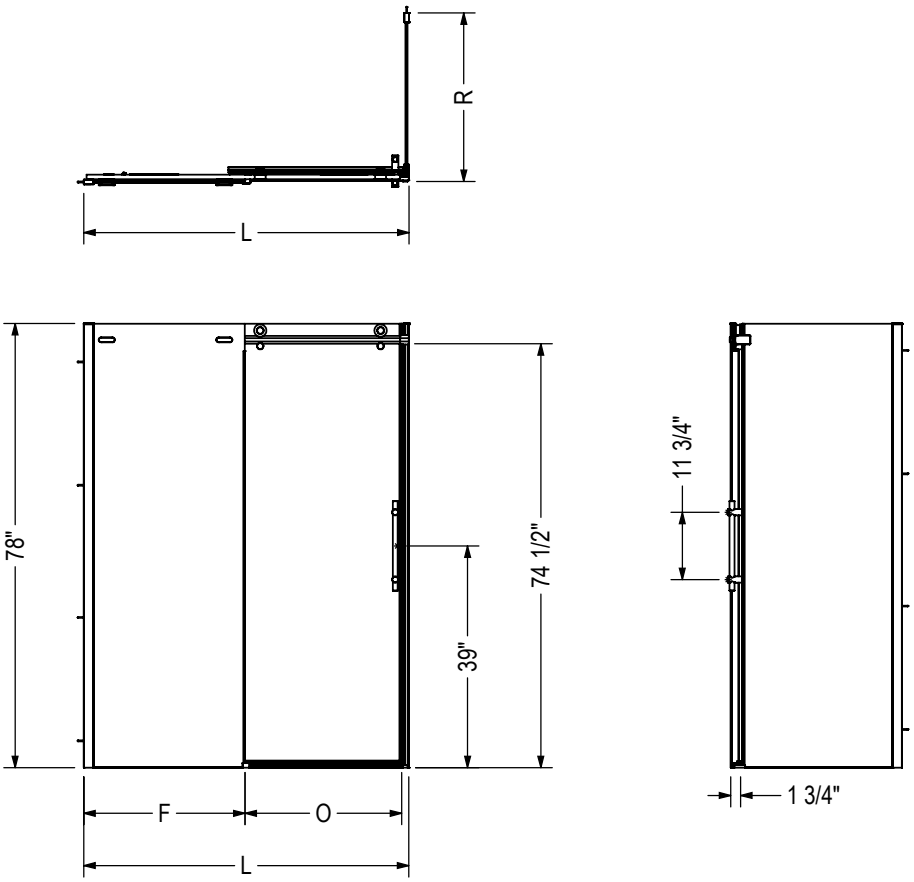

Code	Description	L Adjustable	F	O	R	Wall adjustment
137420	Odyssey Slider door 57"-59 1/2" x 78"	57" - 59 1/2"	27 7/8"	24 1/2" - 25"	-	5/8"
137421	Odyssey Slider door 45"-47 1/2" x 78"	45" - 47 1/2"	21 7/8"	18 1/4" - 18 3/4"	-	5/8"
137422	ODYSSEY RETURN PANEL 32"	-	-	-	29 3/4" - 30 1/2"	3/4"
137423	ODYSSEY RETURN PANEL 36"	-	-	-	33 3/4" - 34 1/2"	3/4"

All dimensions are approximate. Structure measurements must be verified against the unit to ensure proper fit.

Reveal 71 Return Panels

Material : Tempered Glass

Features

- 8 mm tempered glass panels
- Available in 3 finishes: Chrome, Brushed Nickel, Matte Black to match your bathroom
- Return Panel for Corner Shower
- The frameless design brings a sense of spaciousness to the room and creates a sleek, minimalist look
- Reversible panel for easy corner installation on the left or on the right
- Add 1 return panel to a Reveal 71 alcove door for a corner unit
- Easy assembly between door and return panel
- Proudly made in Canada
- Warranty: 10 years

REVEAL 71 32 X 71 ½ - 8MM - 136673

SKU	Color	Dimensions & Weight	Packaging	MSRP
136673-900-084-000	Clear / Chrome	28 3/4” - 29 7/8” x 71 1/2” / 74 lb	5.22 ft³	$ 790
136673-900-173-000	Clear / Dark Bronze			$ 911
136673-900-305-000	Clear / Brushed Nickel			$ 850

REVEAL 71 RETURN PANEL FOR 34 IN. - 136674

SKU	Color	Dimensions & Weight	Packaging	MSRP
136674-900-084-000	Clear / Chrome	30 3/4” - 31 7/8” x 71 1/2” / 75 lb	5.3 ft³	$ 811
136674-900-173-000	Clear / Dark Bronze			$ 931
136674-900-305-000	Clear / Brushed Nickel			$ 872

REVEAL 71 RETURN PANEL FOR 36 IN. - 136675

SKU	Color	Dimensions & Weight	Packaging	MSRP
136675-900-084-000	Clear / Chrome	32 3/4” - 33 7/8” x 71 1/2” / 80 lb	5.3 ft³	$ 832
136675-900-173-000	Clear / Dark Bronze			$ 957
136675-900-305-000	Clear / Brushed Nickel			$ 899

Reveal Sleek 71 Return Panels

Material : Tempered Glass

Features

- For installation on acrylic walls, ceramic and Utile
- For a corner unit, add 1 return panel to a Reveal Sleek alcove door
- For a corner unit, add 1 return panel to a Reveal Sleek alcove door
- 8 mm (5/16 in.) tempered glass with a height of 71 ½ in.
- Includes a support arm to stabilize the panel
- Can be installed on the left or right side
- Offered in 32, 34 and 36 in. wide to fit standard bases dimensions

REVEAL SLEEK 71 RETURN PANEL FOR 32 IN. - 139581

SKU	Color	Dimensions & Weight	Packaging	MSRP
139581-900-084-000	Clear / Chrome	29 3/8” - 30 3/8” x 71 1/2” / 74 lb	4.72 ft^3	$ 511
139581-900-173-000	Clear / Dark Bronze			$ 547
139581-900-305-000	Clear / Brushed Nickel			$ 536
139581-900-340-000	Clear / Matte Black			$ 547

REVEAL SLEEK 71 RETURN PANEL FOR 34 IN. - 139582

SKU	Color	Dimensions & Weight	Packaging	MSRP
139582-900-084-000	Clear / Chrome	31 3/8” - 32 3/8” x 71 1/2” / 75 lb	5.97 ft^3	$ 543
139582-900-173-000	Clear / Dark Bronze			$ 586
139582-900-305-000	Clear / Brushed Nickel			$ 570
139582-900-340-000	Clear / Matte Black			$ 586

REVEAL SLEEK 71 RETURN PANEL FOR 36 IN. - 139583

SKU	Color	Dimensions & Weight	Packaging	MSRP
139583-900-084-000	Clear / Chrome	33 3/8” - 34 3/8” x 71 1/2” / 80 lb	5.97 ft^3	$ 578
139583-900-173-000	Clear / Dark Bronze			$ 621
139583-900-305-000	Clear / Brushed Nickel			$ 607
139583-900-340-000	Clear / Matte Black			$ 621

STANDARD

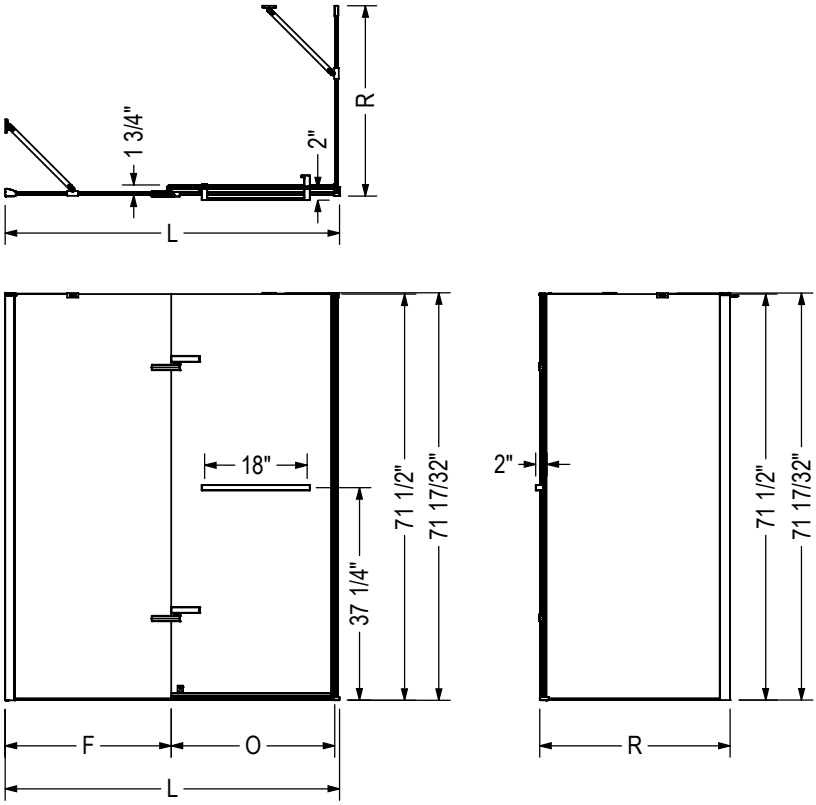

Code	Description	L	F	R	O	Wall Adjustment Return panel (R)	Wall Adjustment Fixed panel (F)
139575	Reveal Sleek 71 1/2" x 32 1/2" - 35 1/2"	32 1/2" - 35 1/2"	5 3/8"	-	23 3/4" - 26 3/4"	-	3/4"
139576	Reveal Sleek 71 1/2" x 38" - 41"	38" - 41"	10 7/8"	-	23 3/4" - 26 3/4"	-	3/4"
139577	Reveal Sleek 71 1/2" x 41 1/2" - 44 1/2"	41 1/2" - 44 1/2"	14 3/8"	-	23 3/4" - 26 3/4"	-	3/4"
139578	Reveal Sleek 71 1/2" x 44" - 47"	44" - 47"	16 7/8"	-	23 3/4" - 26 3/4"	-	3/4"
139579	Reveal Sleek 71 1/2" x 51 1/2" - 54 1/2"	51 1/2" - 54 1/2"	24 3/8"	-	23 3/4" - 26 3/4"	-	3/4"
139580	Reveal Sleek 71 1/2" x 56" - 59"	56" - 59"	28 7/8"	-	23 3/4" - 26 3/4"	-	3/4"
139581	Reveal Sleek Return Panel 32"	-	-	29 7/16" - 30 7/16"	-	1"	-
139582	Reveal Sleek Return Panel 34"	-	-	31 7/16" - 32 7/16"	-	1"	-
139583	Reveal Sleek Return Panel 36"	-	-	33 7/16" - 34 7/16"	-	1"	-

All dimensions are approximate. Structure measurements must be verified against the unit to ensure proper fit.

Uptown Return Panels

Material : Tempered Glass

Features

- 8 mm (5/16”) tempered glass
- Configuration consists of a single panel to be combined with a Uptown shower door (Bypass, Slider, Pivot)
- Configuration consists of a single panel to be combined with a Uptown shower door (Bypass, Slider, Pivot)
- 76in high clear glass panel
- Glass panels come with the Lotus Easy Clean Glass Protection to repel soap and water stains for carefree maintenance
- Reversible panel for easy corner installation on the left or on the right
- Out-of-plumb adjustment in the wall profile
- Easy assembly between door and return panel
- Due to the weight and height of the glass, we recommend a 2 person team to install this product

UPTOWN RETURN PANEL 32 X 76 - 8 MM - 135327

SKU	Color	Dimensions & Weight	Packaging	MSRP
135327-900-084-000	Clear / Chrome	30 1/8” - 30 7/8” x 76” / 67 lb	5.63 ft^3	$ 578
135327-900-305-000	Clear / Brushed Nickel			$ 613
135327-900-340-000	Clear / Matte Black			$ 627

UPTOWN RETURN PANEL 36 X 76 - 8 MM - 135328

SKU	Color	Dimensions & Weight	Packaging	MSRP
135328-900-084-000	Clear / Chrome	34 1/8” - 34 7/8” x 76” / 73 lb	6.34 ft^3	$ 646
135328-900-305-000	Clear / Brushed Nickel			$ 680
135328-900-340-000	Clear / Matte Black			$ 703

STANDARD

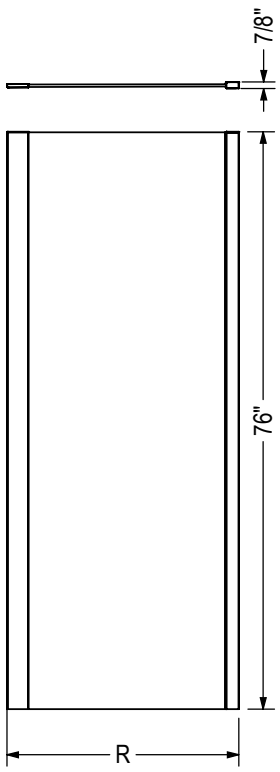

Code	Description	R
137391	Uptown Return Panel for 32" base	30 1/8" - 30 7/8"
137392	Uptown Return Panel for 36" base	34 1/8" - 34 7/8"

- Wall adjustment = 3/4"

All dimensions are approximate. Structure measurements must be verified against the unit to ensure proper fit.

Incognito 76 Return Panels

Material : Tempered Glass

Features

- Tempered Glass panels 5/16 in. (8 mm) with 76 in. high
- Return Panels available in 32 in. and 36 in. wide
- Add 1 return panel to a Incognito bypass alcove door for a corner unit
- 4 finishes: Chrome, Brushed Nickel, Matte Black and Shaker pattern

INCOGNITO 76 RETURN PANEL FOR 36IN. - 136561

SKU	Color	Dimensions & Weight	Packaging	MSRP
136561-900-084-000	Clear / Chrome	34” - 35” x 76” / 74 lb	5.44 ft^3	$ 605
136561-900-305-000	Clear / Brushed Nickel			$ 635
136561-900-340-000	Clear / Matte Black			$ 651
136561-972-340-000	Shaker / Matte Black			$ 666

STANDARD

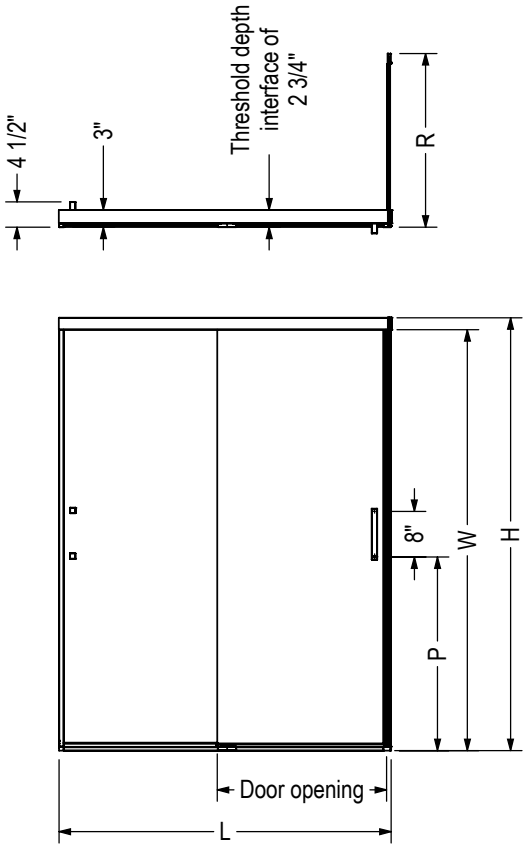

Code	Description	H	W	L Adjustable	Door opening	P	R	Wall adjustment
135334	Incognito 76" 44 - 47" x 76"	76"	73 7/8"	44" - 47"	18 1/4" - 22 1/4"	33 7/8"	-	1/2"
135335	Incognito 76" 56 - 59" x 76"	76"	73 7/8"	56" - 59"	24 1/4" - 28 1/4"	33 7/8"	-	1/2"
136560	Incognito RP 32"	76"	-	-	-	-	30" - 31"	1"
136561	Incognito RP 36"	76"	-	-	-	-	34" - 35"	1"

All dimensions are approximate. Structure measurements must be verified against the unit to ensure proper fit.

Halo Pro 60 x 32 x 78 3/4 - 8mm

Material : Tempered Glass

Features

- 8 mm tempered glass panels
- Available in 2 finishes: Chrome and Matte Black
- Halo Pro is specifically designed for the trained installer in mind
- Configuration consists of: Sliding Door, Stationary Panel and Return Panel
- The door provides a watertight seal, ensuring no leaks or spills occur during use
- Reversible, allowing for left or right opening to accommodate different bathroom layouts
- This convinient shower enclosure configuration is preset with all the necessary glass for a left or right corner for fit a corner base and wall in 60in by 32in
- Glass panels come with the Lotus Easy Clean Glass Protection to repel soap and water stains for carefree maintenance
- Compatible with MAAX's full line of shower bases and walls, making it a versatile addition to any bathroom, validate all dimensions and measure on site before your final selection.

HALO PRO 60 X 32 X 78 3/4 - 8MM - 134951

SKU	Color	Dimensions & Weight	Packaging	MSRP
134951-900-084-000	Clear / Chrome	59” x 32” x 78 3/4” / 195 lb	152 ft^3	$ 2245
134951-900-340-000	Clear / Matte Black			$ 2452

Halo Pro Corner

Material : Tempered Glass

Features

- 8 mm tempered glass panels
- Available in 2 finishes: Chrome and Matte Black
- Halo Pro is specifically designed for the trained installer in mind
- Configuration consists of: Sliding Door, Stationary Panel and Return Panel
- The door provides a watertight seal, ensuring no leaks or spills occur during use
- Reversible, allowing for left or right opening to accommodate different bathroom layouts
- This convinient shower enclosure configuration is preset with all the necessary glass for a left or right corner for fit a corner base and wall in 48in by 32in
- Glass panels come with the Lotus Easy Clean Glass Protection to repel soap and water stains for carefree maintenance
- Compatible with MAAX's full line of shower bases and walls, making it a versatile addition to any bathroom, validate all dimensions and measure on site before your final selection.

HALO PRO 48 X 32 X 78 3/4 - 8MM - 134950

SKU	Color	Dimensions & Weight	Packaging	MSRP
134950-900-084-000	Clear / Chrome	47” x 32” x 78 3/4” / 181 lb	152 ft^3	$ 2109
134950-900-340-000	Clear / Matte Black			$ 2305

HALO PRO 48 X 36 X 78 3/4 - 8MM - 134952

SKU	Color	Dimensions & Weight	Packaging	MSRP
134952-900-084-000	Clear / Chrome	47” x 36” x 78 3/4” / 191 lb	16.97 ft^3	$ 2152
134952-900-340-000	Clear / Matte Black			$ 2356

HALO PRO 60 X 36 X 78 3/4 - 8MM - 134955

SKU	Color	Dimensions & Weight	Packaging	MSRP
134955-900-084-000	Clear / Chrome	59” x 36” x 78 3/4” / 205 lb	16.97 ft^3	$ 2288
134955-900-340-000	Clear / Matte Black			$ 2502

STANDARD

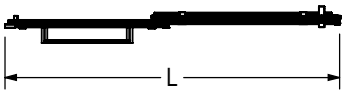

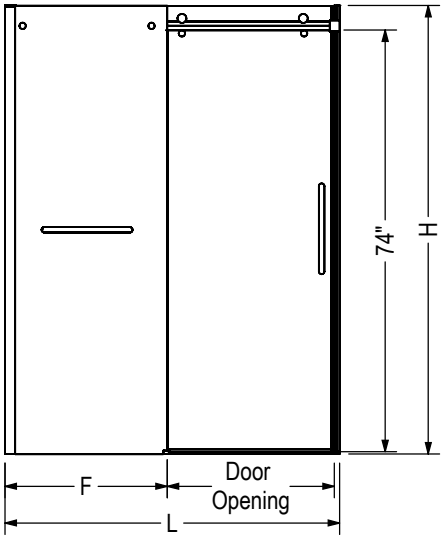

Code	Description	H	L Adjustable	F	Door Opening	Wall Adjustment
138950	Halo Pro 78 3/4" x 47" without Towel bar	78 3/4"	44 1/2" - 47"	22 1/2"	16 1/4" - 18 3/4"	1"
138954	Halo Pro 78 3/4" x 47" with Towel bar	78 3/4"	44 1/2" - 47"	22 1/2"	16 1/4" - 18 3/4"	1"
138952	Halo Pro 78 3/4" x 59" without Towel bar	78 3/4"	56 1/2" - 59"	28 5/8"	22 1/8" - 24 5/8"	1"
138956	Halo Pro 78 3/4" x 59" with Towel bar	78 3/4"	56 1/2" - 59"	28 5/8"	22 1/8" - 24 5/8"	1"

All dimensions are approximate. Structure measurements must be verified against the unit to ensure proper fit.

Halo Pro Corner With Towel Bar

Material : Tempered Glass

Features

- 8 mm tempered glass panels
- Available in 2 finishes: Chrome and Matte Black
- Halo Pro is specifically designed for the trained installer in mind
- Configuration consists of: Sliding Door, Stationary Panel with a towel bar and Return Panel
- The door provides a watertight seal, ensuring no leaks or spills occur during use
- Reversible, allowing for left or right opening to accommodate different bathroom layouts
- This convinient shower enclosure configuration is preset with all the necessary glass for a left or right corner for fit a corner base and wall in 48in by 32in
- Glass panels come with the Lotus Easy Clean Glass Protection to repel soap and water stains for carefree maintenance
- Compatible with MAAX's full line of shower bases and walls, making it a versatile addition to any bathroom, validate all dimensions and measure on site before your final selection.

HALO PRO TB 48 X 32 X 78 3/4 - 8MM - 134954

SKU	Color	Dimensions & Weight	Packaging	MSRP
134954-900-084-000	Clear / Chrome	47” x 32” x 78 3/4” / 181 lb	159 ft^3	$ 2210
134954-900-340-000	Clear / Matte Black			$ 2414

HALO PRO TB 60 X 36 X 78 3/4 - 8MM - 134957

SKU	Color	Dimensions & Weight	Packaging	MSRP
134957-900-084-000	Clear / Chrome	59” x 36” x 78 3/4” / 205 lb	16.74 ft^3	$ 2390
134957-900-340-000	Clear / Matte Black			$ 2612

STANDARD

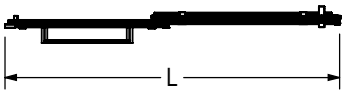

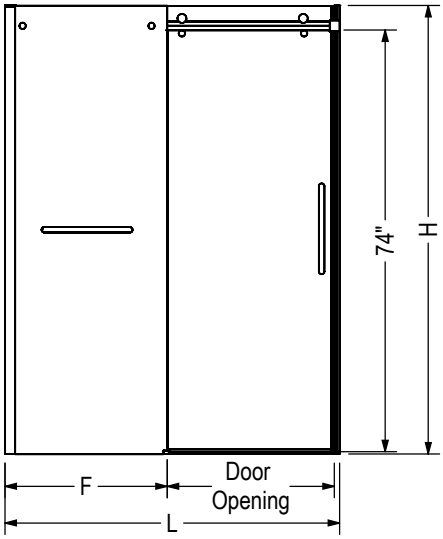

Code	Description	H	L Adjustable	F	Door Opening	Wall Adjustment
138950	Halo Pro 78 3/4" x 47" without Towel bar	78 3/4"	44 1/2" - 47"	22 1/2"	16 1/4" - 18 3/4"	1"
138954	Halo Pro 78 3/4" x 47" with Towel bar	78 3/4"	44 1/2" - 47"	22 1/2"	16 1/4" - 18 3/4"	1"
138952	Halo Pro 78 3/4" x 59" without Towel bar	78 3/4"	56 1/2" - 59"	28 5/8"	22 1/8" - 24 5/8"	1"
138956	Halo Pro 78 3/4" x 59" with Towel bar	78 3/4"	56 1/2" - 59"	28 5/8"	22 1/8" - 24 5/8"	1"

All dimensions are approximate. Structure measurements must be verified against the unit to ensure proper fit.

Halo Pro TB 48 x 36 x 78 3/4 - 8mm

Material : Tempered Glass

Features

- 8 mm tempered glass panels
- Available in 2 finishes: Chrome and Matte Black
- Halo Pro is specifically designed for the trained installer in mind
- Configuration consists of: Sliding Door, Stationary Panel with a towel bar and Return Panel
- The door provides a watertight seal, ensuring no leaks or spills occur during use
- Reversible, allowing for left or right opening to accommodate different bathroom layouts
- This convinient shower enclosure configuration is preset with all the necessary glass for a left or right corner for fit a corner base and wall in 48in by 36in
- Glass panels come with the Lotus Easy Clean Glass Protection to repel soap and water stains for carefree maintenance
- Compatible with MAAX's full line of shower bases and walls, making it a versatile addition to any bathroom, validate all dimensions and measure on site before your final selection.

HALO PRO TB 48 X 36 X 78 3/4 - 8MM - 134956

SKU	Color	Dimensions & Weight	Packaging	MSRP
134956-900-084-000	Clear / Chrome	47” x 36” x 78 3/4” / 191 lb	17.12 ft^3	$ 2255
134956-900-340-000	Clear / Matte Black			$ 2464

Halo Pro TB 60 x 32 x 78 3/4 - 8mm

Material : Tempered Glass

Features

- 8 mm tempered glass panels
- Available in 2 finishes: Chrome and Matte Black
- Halo Pro is specifically designed for the trained installer in mind
- Configuration consists of: Sliding Door, Stationary Panel with a towel bar and Return Panel
- The door provides a watertight seal, ensuring no leaks or spills occur during use
- Reversible, allowing for left or right opening to accommodate different bathroom layouts
- This convinient shower enclosure configuration is preset with all the necessary glass for a left or right corner for fit a corner base and wall in 60in by 32in
- Glass panels come with the Lotus Easy Clean Glass Protection to repel soap and water stains for carefree maintenance
- Compatible with MAAX's full line of shower bases and walls, making it a versatile addition to any bathroom, validate all dimensions and measure on site before your final selection.

HALO PRO TB 60 X 32 X 78 3/4 - 8MM - 134953

SKU	Color	Dimensions & Weight	Packaging	MSRP
134953-900-084-000	Clear / Chrome	59” x 32” x 78 3/4” / 195 lb	14.7 ft^3	$ 2347
134953-900-340-000	Clear / Matte Black			$ 2561

Halo Round

Features

- 75 5/8” high luxury clear glass panel
- 8mm (5/16”) tempered glass with chrome hardware
- Ball bearing roller technology allowing for 1/4” adjustment
- For installation with round shower base and ceramic walls
- Available as left or right opening specify when ordering

HALO ROUND - 139399L

SKU	Glass / Finish	Door Opening	Dimensions & Weight	Packaging	MSRP
139399-900-084-001	Clear / Chrome	Left	36” x 36” x 75 5/8” / 185 lb	21.4 ft^3	$ 1661

HALO ROUND - 139399R

SKU	Glass / Finish	Door Opening	Dimensions & Weight	Packaging	MSRP
139399-900-084-002	Clear / Chrome	Right	36” x 36” x 75 5/8” / 185 lb	21.4 ft^3	$ 1661

STANDARD

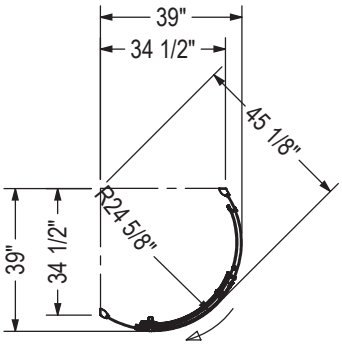

- Closing direction of the door
- Door opening : 22"

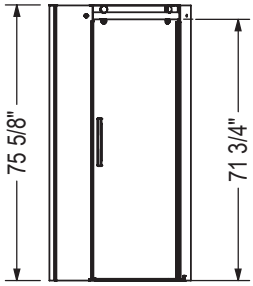

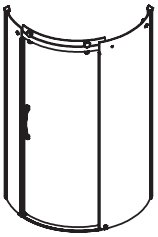

LEFT

139399-900-084-001
or 139399-L-900-084

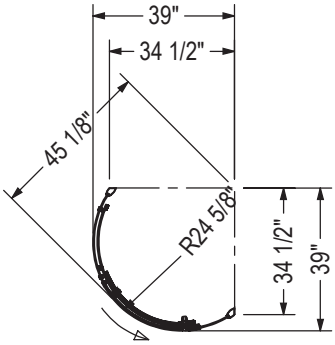

- Closing direction of the door
- Door opening : 22"

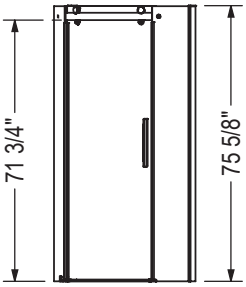

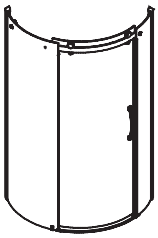

RIGHT

139399-900-084-002
or 139399-R-900-084

All dimensions are approximate. Structure measurements must be verified against the unit to ensure proper fit.

Go to Table of Contents

Odyssey SC Enclosure 48 x 32 x 78 - 8mm

Material : Tempered Glass

Features

- 8 mm (5/16”) tempered glass with Lotus easy clean protection
- Slim stainless header that requires no cut to ease installation
- Innovative double SOFT CLOSE by MAAX prevents slamming
- Double-sided handle designed for comfort
- Detachable door guide to distance the glass when cleaning
- 78” high clear glass panel
- High quality rollers for smooth glide
- Reversible shower door for left or right opening
- 5/8” out-of-plumb adjustment

ODYSSEY SC ENCLOSURE 48 X 32 X 78 - 8MM - 107545

SKU	Color	Dimensions & Weight	Packaging	MSRP
107545-900-084-000	Clear / Chrome	48” x 32” x 78” / 174 lb	10.42 ft^3	$ 2414
107545-900-305-000	Clear / Brushed Nickel			$ 2534
107545-900-340-000	Clear / Matte Black			$ 2616
107545-900-343-000	Clear / Brushed Gold			$ 3032

STANDARD

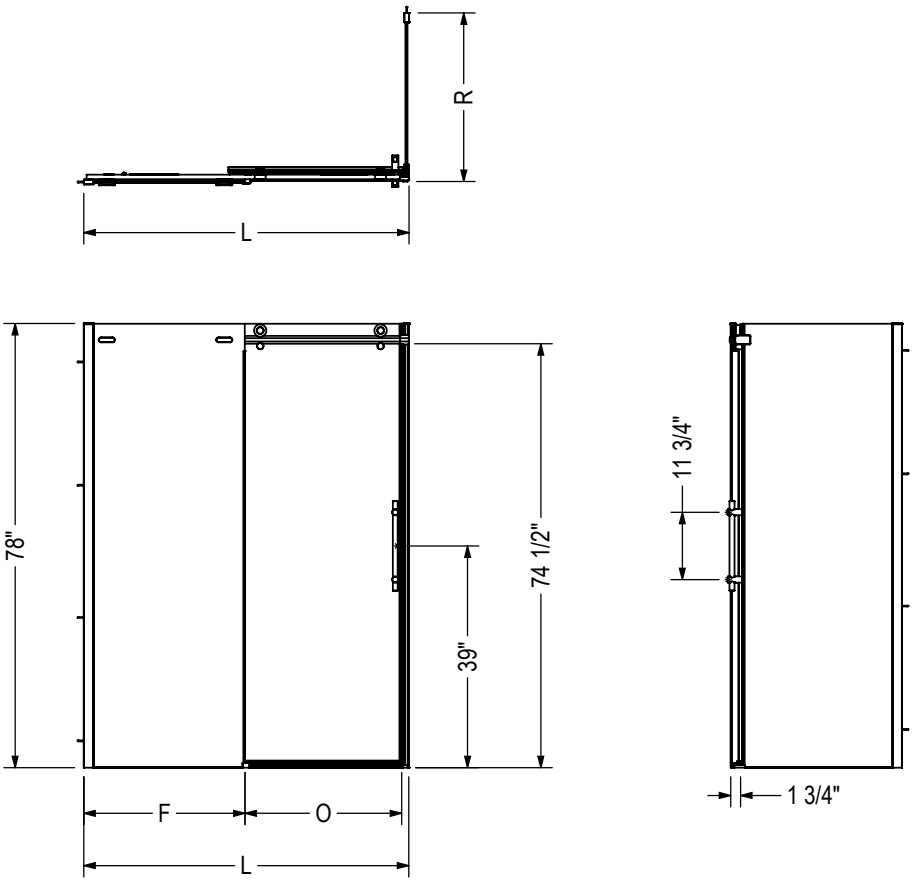

Code	Description	L Adjustable	F	O	R	Wall adjustment
137420	Odyssey Slider door 57"-59 1/2" x 78"	57" - 59 1/2"	27 7/8"	24 1/2" - 25"	-	5/8"
137421	Odyssey Slider door 45"-47 1/2" x 78"	45" - 47 1/2"	21 7/8"	18 1/4" - 18 3/4"	-	5/8"
137422	ODYSSEY RETURN PANEL 32"	-	-	-	29 3/4" - 30 1/2"	3/4"
137423	ODYSSEY RETURN PANEL 36"	-	-	-	33 3/4" - 34 1/2"	3/4"

All dimensions are approximate. Structure measurements must be verified against the unit to ensure proper fit.

Odyssey SC Enclosure 60 x 32 x 78 - 8mm

Material : Tempered Glass

Features

- 8 mm (5/16") tempered glass with Lotus easy clean protection
- Slim stainless header that requires no cut to ease installation
- Innovative double SOFT CLOSE by MAAX prevents slamming
- Double-sided handle designed for comfort
- Detachable door guide to distance the glass when cleaning
- 78" high clear glass panel
- High quality rollers for smooth glide
- Reversible shower door for left or right opening
- 5/8" out-of-plumb adjustment

ODYSSEY SC ENCLOSURE 60" X 32" X 78" - 8MM - 107546

SKU	Color	Dimensions & Weight	Packaging	MSRP
107546-900-084-000	Clear / Chrome	60" x 32" x 78" / 202 lb	11.67 ft^3	$ 2592
107546-900-305-000	Clear / Brushed Nickel			$ 2722
107546-900-340-000	Clear / Matte Black			$ 2808
107546-900-343-000	Clear / Brushed Gold			$ 3246

STANDARD

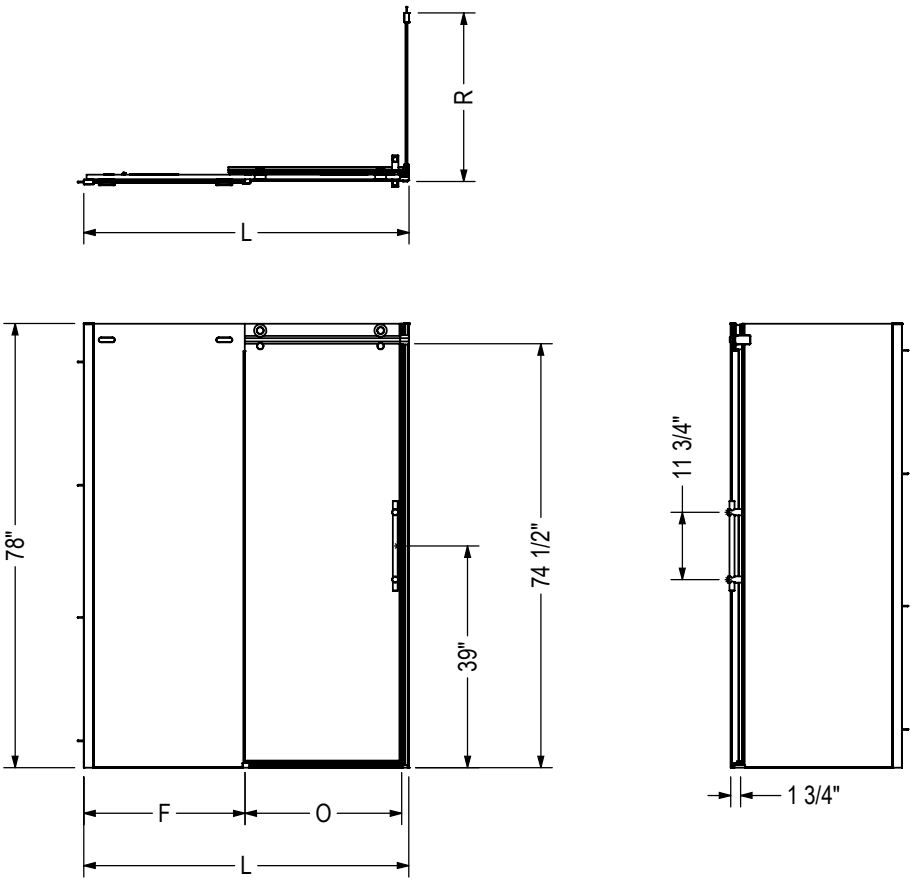

Code	Description	L Adjustable	F	O	R	Wall adjustment
137420	Odyssey Slider door 57"-59 1/2" x 78"	57" - 59 1/2"	27 7/8"	24 1/2" - 25"	-	5/8"
137421	Odyssey Slider door 45"-47 1/2" x 78"	45" - 47 1/2"	21 7/8"	18 1/4" - 18 3/4"	-	5/8"
137422	ODYSSEY RETURN PANEL 32"	-	-	-	29 3/4" - 30 1/2"	3/4"
137423	ODYSSEY RETURN PANEL 36"	-	-	-	33 3/4" - 34 1/2"	3/4"

All dimensions are approximate. Structure measurements must be verified against the unit to ensure proper fit.

Radia Neo-angle

Material : Tempered Glass

Features

- Magnetic and aluminium extrusion for a better watertight closure as well as provide panel rigidity
- Features MAAX Clip-and-Push System that allows to detach the bottom wheels to clean the track
- Reversible door for right or left opening, panels are pre-assembled with the hardware and side jambs for fast and easy installation
- 3/4-inch of out of plumb adjustment for those not so perfect walls
- Ensure fit with MAAX Acrylic base # 101422-000-001-000

RADIA NEO-ANGLE 36 X 36 X 71 ½ - 6MM - 137440

SKU	Glass / Finish	Dimensions & Weight	Packaging	MSRP
137440-900-084-000	Clear / Chrome	36” x 36” x 71 1/2” / 121 lb	5.54 ft^3	$ 1077
137440-900-305-000	Clear / Brushed Nickel			$ 1159
137440-900-340-000	Clear / Matte Black	36” x 36” x 71 1/2” / 108 lb		$ 1159

RADIA NEO-ANGLE 40 X 40 X 71 ½ - 6MM - 137442

SKU	Glass / Finish	Dimensions & Weight	Packaging	MSRP
137442-900-084-000	Clear / Chrome	40” x 40” x 71 1/2” / 134 lb	5.97 ft^3	$ 1160
137442-900-305-000	Clear / Brushed Nickel			$ 1249
137442-900-340-000	Clear / Matte Black	40” x 40” x 71 1/2” / 121 lb		$ 1249

STANDARD

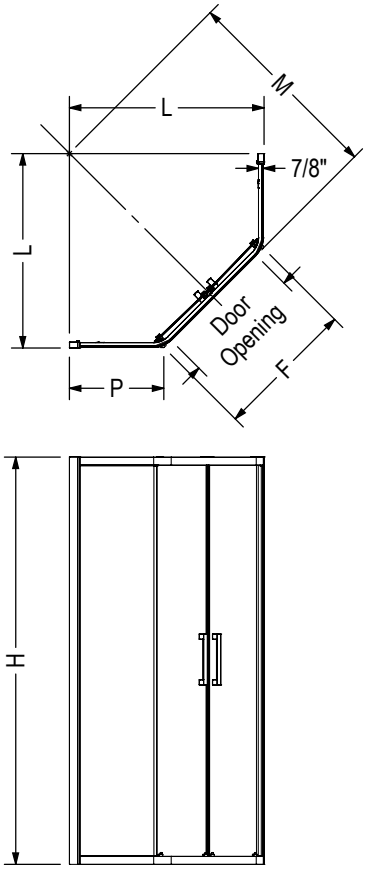

Code	Description	H	M	L	P Adjustable	F	Door Opening	Wall Adjustment
137440	RADIA N-A 36" X 36" X 71.5"	71 5/8"	35 5/8"	34 1/2"	14 9/16" - 15 1/4"	26 3/8"	18 5/16"	3/4"
137441	RADIA N-A 38" X 38" X 71.5"	71 5/8"	37 7/8"	35 5/8"	16 1/8" - 16 13/16	26 7/16"	18 5/16"	3/4"
137442	RADIA N-A 40" X 40" X 71.5"	71 5/8"	40 15/16"	37 13/16"	18 3/16" - 18 7/8"	26 1/2"	18 5/16"	3/4"

All dimensions are approximate. Structure measurements must be verified against the unit to ensure proper fit.

Radia Neo-round

Material : Tempered Glass

Features

- 6 mm tempered glass with Lotus Easy Clean Glass Protection - repels soap and water stains for care-free maintenance
- Magnetic and aluminium extrusion for a better watertight closure as well as provide panel rigidity
- Features MAAX Clip-and-Push System that allows to detach the bottom wheels to clean the track
- Reversible door for right or left opening, panels are pre-assembled with the hardware and side jambs for fast and easy installation
- 3/4-inch of out of plumb adjustment for those not so perfect walls
- Ensure fit with MAAX Acrylic base # 101426-000-001-000

RADIA NEO-ROUND 32 X 32 X 71 ½ - 6MM - 137443

SKU	Glass / Finish	Dimensions & Weight	Packaging	MSRP
137443-900-084-000	Clear / Chrome	32” x 32” x 71 1/2” / 112 lb	5.3 ft³	$ 1104
137443-900-305-000	Clear / Brushed Nickel			$ 1189
137443-900-340-000	Clear / Matte Black	32” x 32” x 71 1/2” / 99 lb		$ 1189

RADIA NEO-ROUND 36 X 36 X 71 ½ - 6MM - 137444

SKU	Glass / Finish	Dimensions & Weight	Packaging	MSRP
137444-900-084-000	Clear / Chrome	36” x 36” x 71 5/8” / 118 lb	6 ft³	$ 1145
137444-900-305-000	Clear / Brushed Nickel			$ 1233
137444-900-340-000	Clear / Matte Black	36” x 36” x 71 5/8” / 105 lb		$ 1233

RADIA NEO-ROUND 40 X 40 X 71 ½ - 6MM - 137445

SKU	Glass / Finish	Dimensions & Weight	Packaging	MSRP
137445-900-084-000	Clear / Chrome	40” x 40” x 71 1/2” / 125 lb	6.25 ft³	$ 1189
137445-900-305-000	Clear / Brushed Nickel			$ 1275
137445-900-340-000	Clear / Matte Black	40” x 40” x 71 1/2” / 112 lb		$ 1275

RADIA NEO-ROUND 38 X 38 X 71 ½ - 6MM - 137449

SKU	Glass / Finish	Dimensions & Weight	Packaging	MSRP
137449-900-084-000	Clear / Chrome	38” x 38” x 71 1/2” / 112 lb	85 ft³	$ 1174
137449-900-340-000	Clear / Matte Black			$ 1261

STANDARD

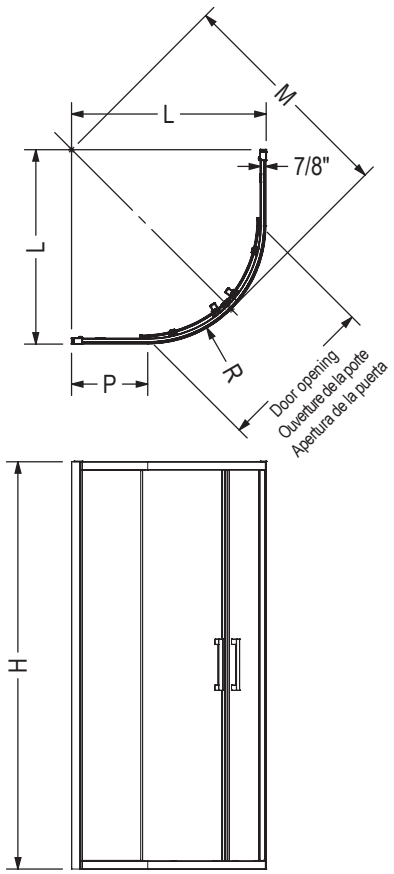

Code Código	Description Descripción	H	M	L	P Adjustable	R	Door opening Ouverture de la porte Apertura de la puerta	Wall adjustment Ajustement du mur Ajuste de la pared
137443	RADIA N-R 32" X 32" X 71.5"	71 1/2"	37 7/8"	29 7/8"	14 7/8" - 15 5/8"	14 9/16"	17 1/2"	3/4"
137444	RADIA N-R 36" X 36" X 71.5"	71 1/2"	39 5/8"	34 1/8"	13" - 13 3/4"	20 5/8"	20 1/2"	3/4"
137449	RADIA N-R 38" X 38" X 71.5"	71 1/2"	42 3/8"	36 1/8"	15" - 15 3/4"	20 5/8"	21 1/4"	3/4"
137445	RADIA N-R 40" X 40" X 71.5"	71 1/2"	44 5/8"	37 5/8"	16 1/2" - 17 1/4"	20 11/16"	22 5/8"	3/4"

All dimensions are approximate. Structure measurements must be verified against the unit to ensure proper fit.

Toutes ces dimensions sont approximatives. Afin d'assurer une installation parfaite, les dimensions de la structure doivent être vérifiées à partir de l'unité.

Todas las dimensiones son aproximadas. Las medidas de la estructura deben ser verificadas contra la unidad para asegurar el ajuste apropiado.

Radia Round

Material : Tempered Glass

Features

- Magnetic and aluminium extrusion for a better watertight closure as well as provide panel rigidity
- Features MAAX Clip-and-Push System that allows to detach the bottom wheels to clean the track
- Reversible door for right or left opening, panels are pre-assembled with the hardware and side jambs for fast and easy installation
- 3/4-inch of out of plumb adjustment for those not so perfect walls
- Ensure fit with MAAX Acrylic base # 105049-000-001-000

RADIA ROUND 36 X 36 X 71 ½ - 6MM - 137446

SKU	Glass / Finish	Dimensions & Weight	Packaging	MSRP
137446-900-084-000	Clear / Chrome	36” x 36” x 71 1/2” / 118 lb	8.48 ft^3	$ 1327
137446-900-305-000	Clear / Brushed Nickel			$ 1426
137446-900-340-000	Clear / Matte Black	36” x 36” x 71 1/2” / 108 lb		$ 1426

STANDARD

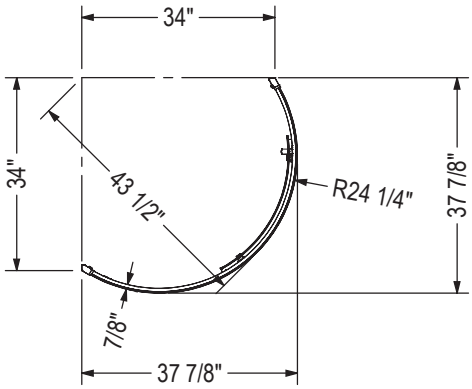

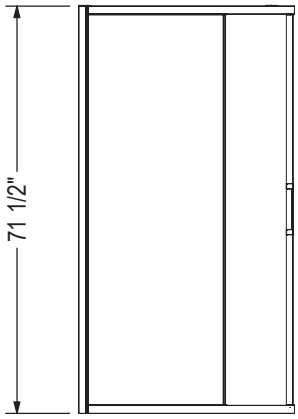

Code	Description	Door Opening	Wall Adjustment
137446	RADIA Round 36" X 36" X 71.5"	22 1/8"	3/4"

All dimensions are approximate. Structure measurements must be verified against the unit to ensure proper fit.

Radia Square

Material : Tempered Glass

Features

- 6 mm tempered glass with Lotus Easy Clean Glass Protection - repels soap and water stains for care-free maintenance
- Magnetic and aluminium extrusion for a better watertight closure as well as provide panel rigidity
- Features MAAX Clip-and-Push System that allows to detach the bottom wheels to clean the track
- Reversible door for right or left opening, panels are pre-assembled with the hardware and side jambs for fast and easy installation
- 3/4-inch of out of plumb adjustment for those not so perfect walls
- Ensure fit with MAAX Acrylic base # 101431-000-001-000

RADIA SQUARE 32 X 32 X 71 ½ - 6MM - 137447

SKU	Glass / Finish	Dimensions & Weight	Packaging	MSRP
137447-900-084-000	Clear / Chrome	32” x 32” x 71 1/2” / 101 lb	4.73 ft³	$ 1189
137447-900-305-000	Clear / Brushed Nickel			$ 1275
137447-900-340-000	Clear / Matte Black			$ 1275
137447-977-340-000	French / Matte Black			$ 1405

RADIA SQUARE 36 X 36 X 71 ½ - 6MM - 137448

SKU	Glass / Finish	Dimensions & Weight	Packaging	MSRP
137448-900-084-000	Clear / Chrome	36” x 36” x 71 1/2” / 108 lb	5.26 ft³	$ 1230
137448-900-305-000	Clear / Brushed Nickel			$ 1323
137448-900-340-000	Clear / Matte Black			$ 1323
137448-972-340-000	Shaker / Matte Black			$ 1455
137448-977-340-000	French / Matte Black			$ 1455

RADIA SQUARE 42 X 42 X 71 ½ - 6MM - 137451

SKU	Glass / Finish	Dimensions & Weight	Packaging	MSRP
137451-900-084-000	Clear / Chrome	42” x 42” x 71 1/2” / 125 lb	6.5 ft³	$ 1271
137451-900-340-000	Clear / Matte Black			$ 1366
137451-977-340-000	French / Matte Black			$ 1502

STANDARD

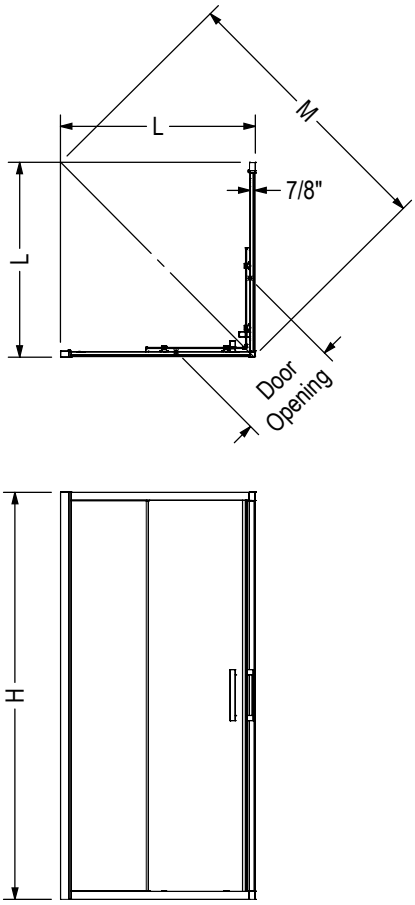

Code	Description	H	L Adjustable	M	Door Opening	Wall Adjustment
137447	RADIA Square 32" X 32" X 71.5"	71 1/2"	29 7/8" - 30 5/8"	42 5/8"	15 3/16"	3/4"
137448	RADIA Square 36" X 36" X 71.5"	71 1/2"	32 15/16" - 33 3/4"	48 1/4"	18 5/16"	3/4"
137451	RADIA Square 42" X 42" X 71.5"	71 1/2"	39 7/8" - 40 5/8"	54 15/16"	22" - 22 7/8"	3/4"

All dimensions are approximate. Structure measurements must be verified against the unit to ensure proper fit.

ModulR Corner Shower Doors

Material : Tempered Glass

Features

- Pivot door
- 8mm tempered glass with lotus glass protection
- Magnetic closure for increased watertightness
- Reversible doors for left or right opening

MODULR 36 X 36 X 78 - 8MM - 137856

SKU	Glass / Finish	Dimensions & Weight	MSRP
137856-900-084-000	Clear / Chrome	36” x 36” x 78” / 162.52 lb	$ 1913
137856-900-305-000	Clear / Brushed Nickel		$ 2066

MODULR 48 X 36 X 78 - 8MM - 137857

SKU	Glass / Finish	Dimensions & Weight	MSRP
137857-900-084-000	Clear / Chrome	48” x 36” x 78” / 202.24 lb	$ 2148
137857-900-305-000	Clear / Brushed Nickel		$ 2308

MODULR 48 X 34 X 78 - 8MM - 137858

SKU	Glass / Finish	Dimensions & Weight	MSRP
137858-900-084-000	Clear / Chrome	48” x 34” x 78” / 196.24 lb	$ 2143
137858-900-305-000	Clear / Brushed Nickel		$ 2302

MODULR 48 X 32 X 78 - 8MM - 137859

SKU	Glass / Finish	Dimensions & Weight	MSRP
137859-900-084-000	Clear / Chrome	48” x 32” x 78” / 190.24 lb	$ 2134
137859-900-305-000	Clear / Brushed Nickel		$ 2295

MODULR 60 X 36 X 78 - 8MM - 137869

SKU	Glass / Finish	Dimensions & Weight	MSRP
137869-900-084-000	Clear / Chrome	60” x 36” x 78” / 229.78 lb	$ 2377
137869-900-305-000	Clear / Brushed Nickel		$ 2559

MODULR 60 X 32 X 78 - 8MM - 137870

SKU	Glass / Finish	Dimensions & Weight	MSRP
137870-900-084-000	Clear / Chrome	60” x 32” x 78” / 217.78 lb	$ 2364
137870-900-305-000	Clear / Brushed Nickel		$ 2544

ACCESSORIES

SKU	Description	MSRP
10060311	Corner glass shelf (9 3/8 x 9 3/8 in.) (sold separately) 10 mm frosted glass with a clear band along the edge Compatible with Utile and tile shower walls	$ 174
10068586-305-603	10068586-XXX-603 - Designer handle 8” Available colours: Chrome (**084**), Brushed Nickel (**305**)	$ 255
10068586-084-603		$ 236

All dimensions are approximate. Structure measurements must be verified against the unit to ensure proper fit.

ModuIR PIVOT SHOWER DOOR:
CORNER 36" (500)

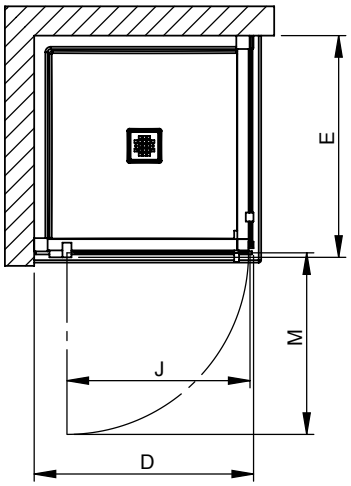

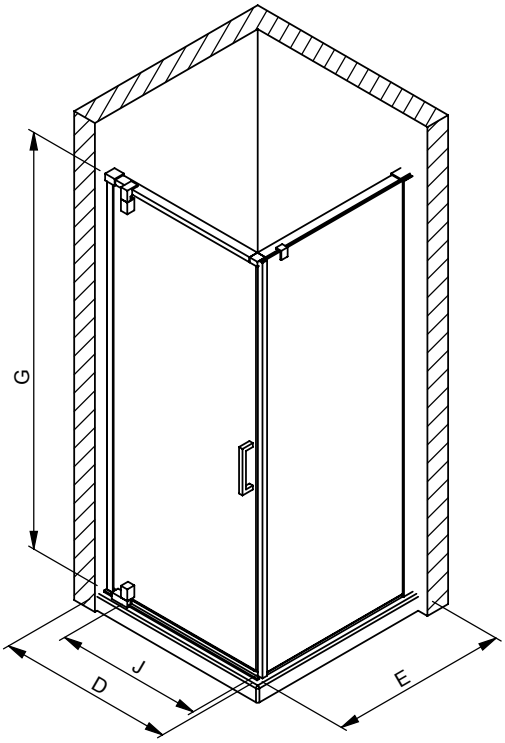

All complementary installation can be also build from the same listed product

CLOSE ON PANEL (RECOMMENDED)

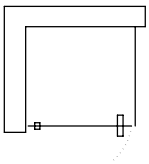

500 (AS SHOWN)

CLOSE ON WALL (LIMITED ADJUSTMENT)

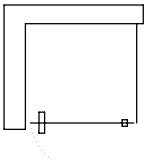

500 (OPTIONAL)

PRODUCT	BASE SIZE	G	D	E	J	M
		HEIGHT (top of glass)	WIDTH (min-max)	DEPTH (min-max)	DOOR ACCESS (maximum)	ENCUM-BRANCE
137856	36X36	78"	34-5/8"	34-1/8" - 35-3/8"	26-1/2"	27-8/7"

Link Curve Neo-angle

Material : Tempered Glass

Features

- 8 mm frameless neo-angle door with Lotus glass protection
- Chrome, brushed nickel or dark bronze hardware available
- Flush mount hinges on inside glass for easy cleaning
- Reversible door for right or left-hand door opening
- Rounded handle and hinges

LINK CURVE NEO-ANGLE 38 X 38 X 75 - 8MM - 137280

SKU	Glass / Finish	Dimensions & Weight	Packaging	MSRP
137280-900-084-000	Clear / Chrome	38” x 38” x 75” / 143 lb	3.67 ft^3	$ 1327
137280-900-173-000	Clear / Dark Bronze			$ 1532
137280-900-305-000	Clear / Brushed Nickel			$ 1425

LINK CURVE NEO-ANGLE 40 X 40 X 75 - 8MM - 137281

SKU	Glass / Finish	Dimensions & Weight	Packaging	MSRP
137281-900-084-000	Clear / Chrome	40” x 40” x 75” / 147.7 lb	3.67 ft^3	$ 1426
137281-900-173-000	Clear / Dark Bronze			$ 1649
137281-900-305-000	Clear / Brushed Nickel			$ 1534

STANDARD

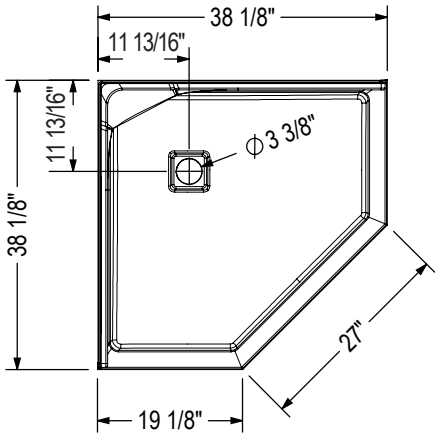

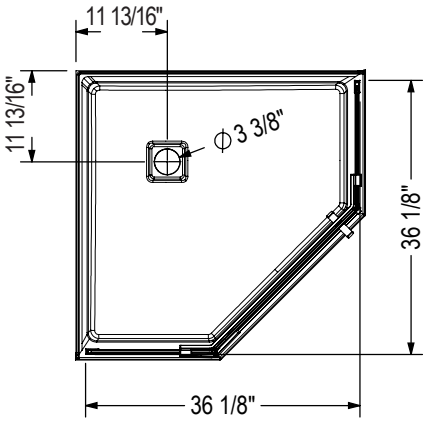

-Door opening : 26 1/8"
-Wall jamb adjustment : 3/4"

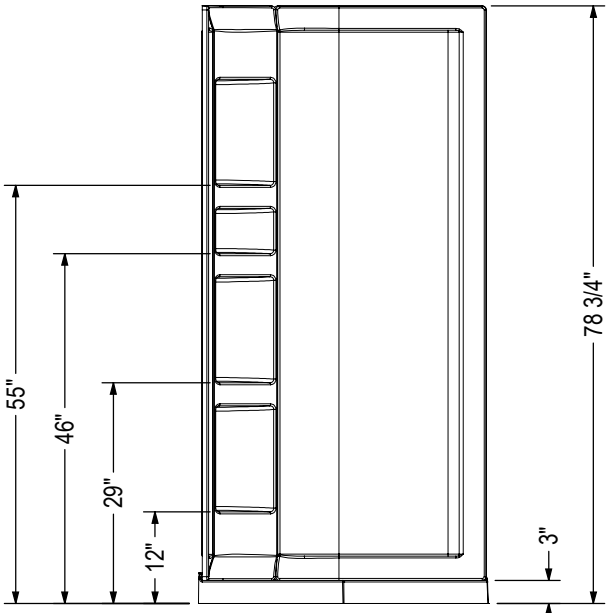

ACRYLIC WALLS - WITHOUT DOOR

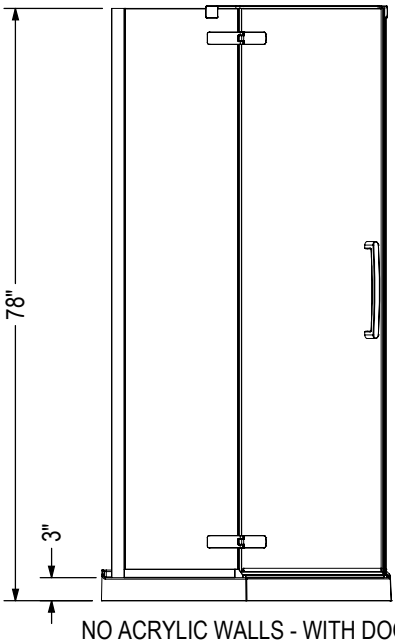

NO ACRYLIC WALLS - WITH DOOR

All dimensions are approximate. Structure measurements must be verified against the unit to ensure proper fit.

Link Curve Rectangular

Material : Tempered Glass

Features

- 8 mm frameless rectangular door with Lotus glass protection
- Chrome, Brushed Nickel or Dark Bronze hardware available
- Flush mount hinges on inside glass for easy cleaning
- Rounded handle and hinges

LINK CURVE RECTANGULAR 42 X 34 X 75 - 8MM - 133302

SKU	Glass / Finish	Dimensions & Weight	Packaging	MSRP
133302-900-084-000	Clear / Chrome	42” x 34” x 75” / 165 lb	4.66 ft^3	$ 1711
133302-900-173-000	Clear / Dark Bronze			$ 1974
133302-900-305-000	Clear / Brushed Nickel			$ 1838
133302-900-340-000	Clear / Matte Black			$ 1974

STANDARD

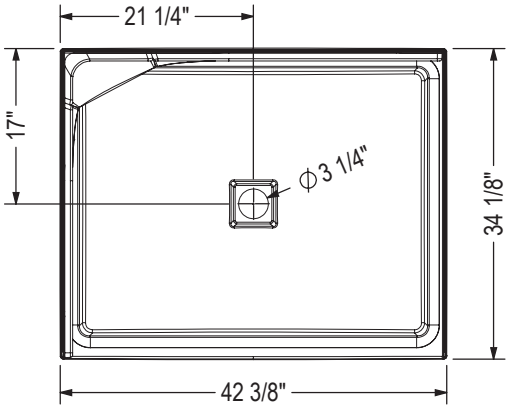

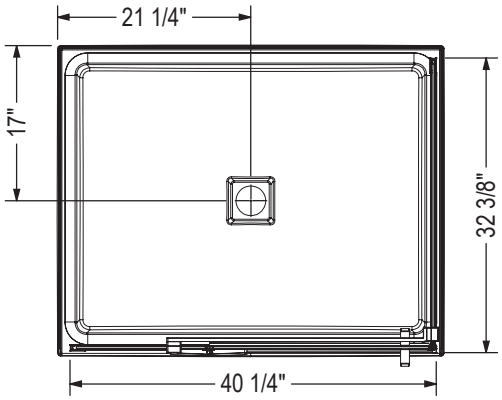

-Door opening : 23 3/4"
-Wall jamb adjustment : 3/4"

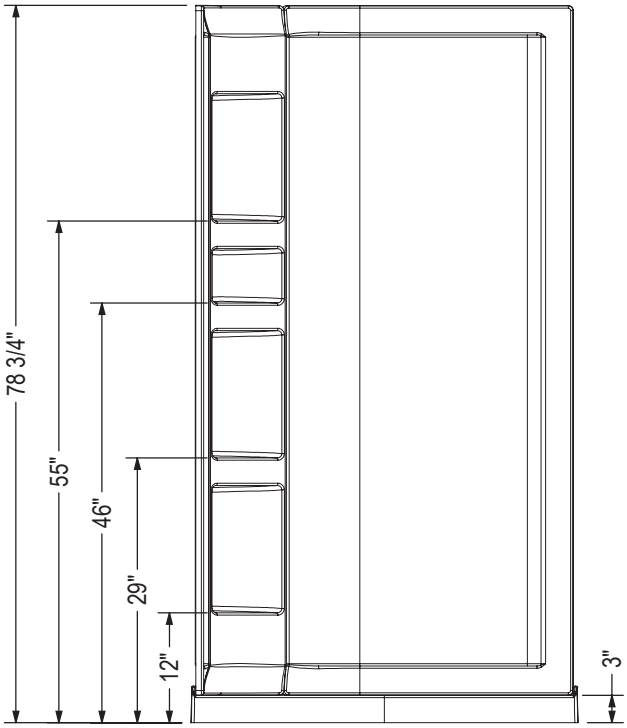

ACRYLIC WALLS - WITHOUT DOOR

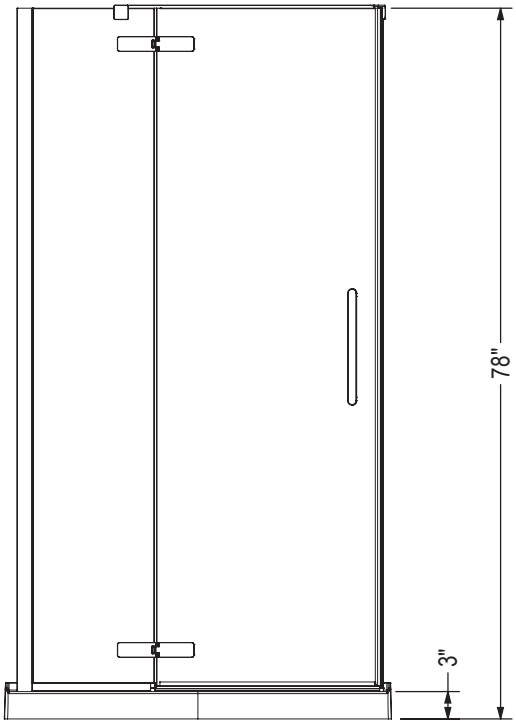

NO ACRYLIC WALLS - WITH DOOR

All dimensions are approximate. Structure measurements must be verified against the unit to ensure proper fit.

Go to Table of Contents

Link Neo-angle

Material : Tempered Glass

Features

- 8 mm frameless neo-angle door with Lotus glass protection
- Chrome, Brushed Nickel or Dark Bronze hardware available
- Flush mount hinges on inside glass for easy cleaning
- Reversible right or left-hand door opening
- Straight handle and hinges

LINK NEO-ANGLE 38 X 38 X 75 - 8MM - 136315

SKU	Glass / Finish	Dimensions & Weight	Packaging	MSRP
136315-900-084-000	Clear / Chrome	38” x 38” x 75” / 143 lb	3.67 ft^3	$ 1327
136315-900-173-000	Clear / Dark Bronze			$ 1532
136315-900-305-000	Clear / Brushed Nickel			$ 1425
136315-900-340-000	Clear / Matte Black			$ 1327

LINK NEO-ANGLE 40 X 40 X 75 - 8MM - 136321

SKU	Glass / Finish	Dimensions & Weight	Packaging	MSRP
136321-900-084-000	Clear / Chrome	40” x 40” x 75” / 148 lb	3.67 ft^3	$ 1426
136321-900-173-000	Clear / Dark Bronze			$ 1649
136321-900-305-000	Clear / Brushed Nickel			$ 1534
136321-900-340-000	Clear / Matte Black			$ 1649

STANDARD

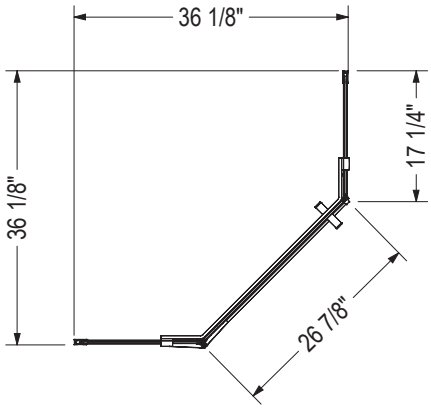

-Door opening : 26 1/8"
-Wall jamb adjustment : 3/4"

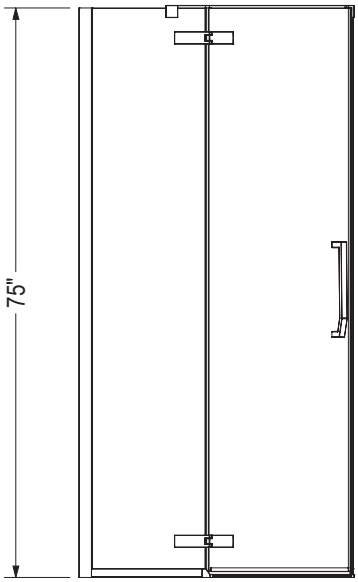

All dimensions are approximate. Structure measurements must be verified against the unit to ensure proper fit.

Link Rectangular

Material : Tempered Glass

Features

- 8 mm frameless rectangular door with Lotus glass protection
- Chrome, Brushed Nickel or Dark Bronze hardware available
- Flush mount hinges on inside glass for easy cleaning
- Reversible right or left-hand door opening
- Straight handle and hinges

LINK RECTANGULAR 42 X 34 X 75 - 8MM - 136330

SKU	Glass / Finish	Dimensions & Weight	Packaging	MSRP
136330-900-084-000	Clear / Chrome	42” x 34” x 75” / 165 lb	4.66 ft^3	$ 1711
136330-900-173-000	Clear / Dark Bronze			$ 1974
136330-900-305-000	Clear / Brushed Nickel			$ 1838

STANDARD

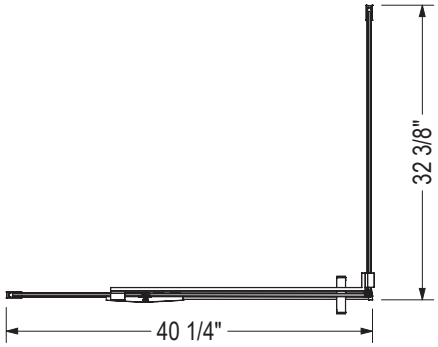

-Door opening : 23 3/4"
-Wall jamb adjustment : 3/4"

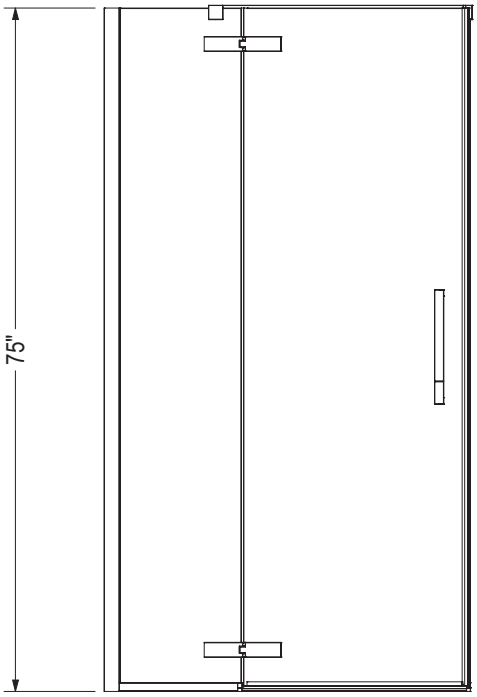

All dimensions are approximate. Structure measurements must be verified against the unit to ensure proper fit.

Manhattan Square 3636

Features

- Model Size: 36 in. L x 36 in. W x 72 in. H
- Shower enclosure includes: Manhattan shower door and return panel
- Frameless pivot door for corner installation
- Choose between a square or a rounded handle design to match any decor
- Available in chrome or matte black finish
- Magnetic closing system ensuring your door stays in place while showering
- No height restrictions
- No threshold piece for ease of cleaning and easy access
- Reversible for left or right-hand opening, giving you flexibility in design.

MANHATTAN SQUARE 3636 - 135230

SKU	Color	Dimensions & Weight	Packaging	MSRP
135230-900-084-100	Clear / Chrome	36” x 36” x 72” / 84 lb	5.14 ft^3	$ 1230
135230-900-084-101				$ 1230
135230-900-340-100	Clear / Matte Black			$ 1323
135230-900-340-101				$ 1323

STANDARD

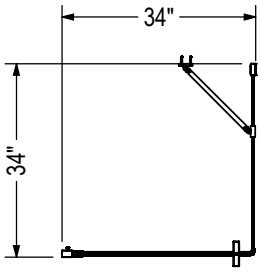

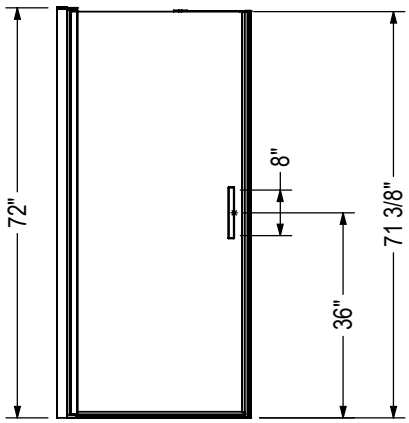

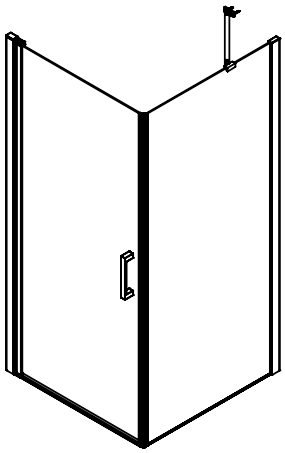

- Pivot door with left or right opening
- Fixed wall jamb adjustment = 3/8'' each side

Code	Description	Door opening
135230	Manhattan Corner door 36"-36" x 72"	30"

All dimensions are approximate. Structure measurements must be verified against the unit to ensure proper fit.

Radia Neo-angle

Material : Tempered Glass

Features

- 6 mm tempered glass with Lotus Easy Clean Glass Protection - repels soap and water stains for care-free maintenance
- Magnetic and aluminium extrusion for a better watertight closure as well as provide panel rigidity
- Features MAAX Clip-and-Push System that allows to detach the bottom wheels to clean the track
- Reversible door for right or left opening, panels are pre-assembled with the hardware and side jambs for fast and easy installation
- 3/4-inch of out of plumb adjustment for those not so perfect walls
- Ensure fit with MAAX Acrylic base # 101423-000-001-000

RADIA NEO-ANGLE 38 X 38 X 71 ½ - 6MM - 137441

SKU	Glass / Finish	Dimensions & Weight	Packaging	MSRP
137441-900-084-000	Clear / Chrome	37 13/16” x 37 13/16” x 71 5/8” / 127 lb	59.75 ft^3	$ 1116
137441-900-305-000	Clear / Brushed Nickel			$ 1201
137441-900-340-000	Clear / Matte Black	37 13/16” x 37 13/16” x 71 5/8” / 103.6 lb		$ 1201

Go to Table of Contents

STANDARD

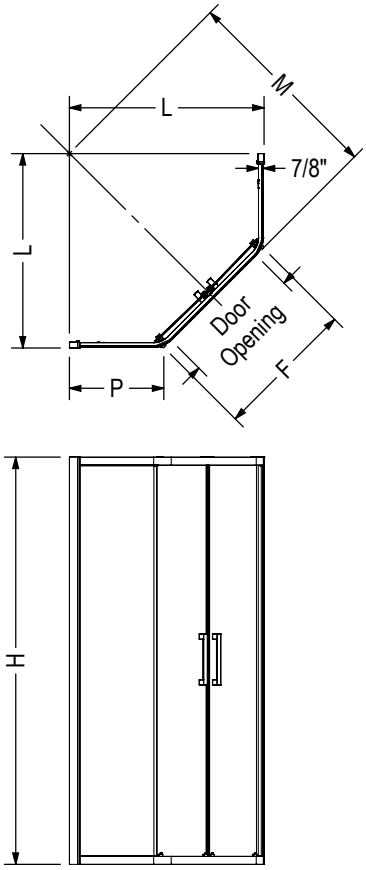

Code	Description	H	M	L	P Adjustable	F	Door Opening	Wall Adjustment
137440	RADIA N-A 36" X 36" X 71.5"	71 5/8"	35 5/8"	34 1/2"	14 9/16" - 15 1/4"	26 3/8"	18 5/16"	3/4"
137441	RADIA N-A 38" X 38" X 71.5"	71 5/8"	37 7/8"	35 5/8"	16 1/8" - 16 13/16	26 7/16"	18 5/16"	3/4"
137442	RADIA N-A 40" X 40" X 71.5"	71 5/8"	40 15/16"	37 13/16"	18 3/16" - 18 7/8"	26 1/2"	18 5/16"	3/4"

All dimensions are approximate. Structure measurements must be verified against the unit to ensure proper fit.

Silhouette Neo-angle

Material : Tempered Glass

Features

- Neo-angle framed pivot door for corner shower
- Full-length aluminium pull adds reinforcement and doubles as a handle
- Reversible door for left or right opening
- Gutter is integrated in the inside of the door
- Adjustable pivot mechanism

SILHOUETTE NEO-ANGLE PIVOT 38 X 38 X 70 IN. - 137901

SKU	Glass / Finish	Dimensions & Weight	Packaging	MSRP
137901-900-084-000	Clear / Chrome	38” x 38” x 70” / 77 lb	5.76 ft^3	$ 923
137901-970-084-000	Raindrop / Chrome			$ 923

SILHOUETTE NEO-ANGLE PIVOT 36 X 36 X 70 IN. - 137904

SKU	Glass / Finish	Dimensions & Weight	Packaging	MSRP
137904-900-084-000	Clear / Chrome	36” x 36” x 70” / 74 lb	5.44 ft^3	$ 892
137904-970-084-000	Raindrop / Chrome			$ 892

STANDARD

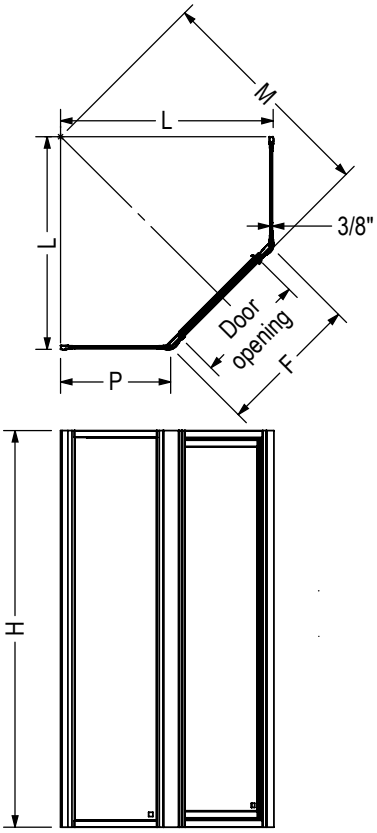

Code	Description	H	M Adjustable	L Adjustable	Door opening	F Adjustable	P Adjustable	Wall adjustment
137700	Silhouette Plus Pivot 36" x 70"	69 5/8"	32 1/4" - 35 1/8"	31 1/4" - 33 3/4"	17 3/4"	23 3/8" - 24 7/8"	14 3/8" - 15 7/8"	2 1/2"
137710	Silhouette Plus Pivot 38" x 70"	69 5/8"	37 1/4" - 40 1/8"	34 3/4" - 37 1/4"	17 1/2"	23 3/8" - 24 7/8"	17 7/8" - 19 3/8"	2 1/2"
137720	Silhouette Plus Pivot 36" x 70"	69 5/8"	34 5/8" - 37 1/2"	33 1/8" - 35 3/4"	18 1/2"	24 1/8" - 25 5/8"	15 3/4" - 17 1/4"	2 1/2"
137730	Silhouette Plus Pivot 38 - 40" x 70"	69 5/8"	37 5/8" - 40 1/2"	35 1/4" - 37 7/8"	18 1/2"	24 1/8" - 25 5/8"	17 7/8" - 19 3/8"	2 1/2"
137750	Silhouette Plus Pivot 38 - 40" x 70"	69 5/8"	38 1/8" - 41"	37" - 39 1/2"	22 1/4"	27 7/8" - 29 3/8"	16 7/8" - 18 3/8"	2 1/2"
137760	Silhouette Plus Pivot 42" x 70"	69 5/8"	41" - 43 7/8"	39" - 41 1/2"	22 1/4"	27 7/8" - 29 3/8"	18 7/8" - 20 3/8"	2 1/2"

All dimensions are approximate. Structure measurement must be verified againtst the unit to ensure proper fit.

Go to Table of Contents

Silhouette Plus Neo-angle

Material : Tempered Glass

Features

- Neo-angle framed pivot door for corner shower
- Full-length aluminium pull reinforces doors and doubles as a handle
- Reversible door for left or right opening
- Gutter is integrated in the inside of the door
- 6 ways to adjust door to irregular base

SILHOUETTE PLUS NEO-ANGLE 38 X 38 X 70 IN. - 137710

SKU	Glass / Finish	Dimensions & Weight	Packaging	MSRP
137710-900-084-000	Clear / Chrome	38” x 38” x 70” / 73 lb	5.39 ft^3	$ 1056
137710-965-084-000	Hammer / Chrome			$ 1056

SILHOUETTE PLUS NEO-ANGLE 36 X 36 X 70 IN. - 137720

SKU	Glass / Finish	Dimensions & Weight	Packaging	MSRP
137720-900-084-000	Clear / Chrome	36” x 36” x 70” / 72 lb	5.55 ft^3	$ 1048
137720-965-084-000	Hammer / Chrome			$ 1048

SILHOUETTE PLUS NEO-ANGLE 38 X 38-40 X 40 X 70 IN. - 137730

SKU	Glass / Finish	Dimensions & Weight	Packaging	MSRP
137730-900-084-000	Clear / Chrome	38” x 38” x 70” / 71 lb	5.42 ft^3	$ 1065
137730-965-084-000	Hammer / Chrome			$ 1065

SILHOUETTE PLUS NEO-ANGLE 38 X 38-40 X 40 X 70 IN. - 137750

SKU	Glass / Finish	Dimensions & Weight	Packaging	MSRP
137750-965-084-000	Hammer / Chrome	38” x 38” x 70” / 78 lb	6.19 ft^3	$ 1079

STANDARD

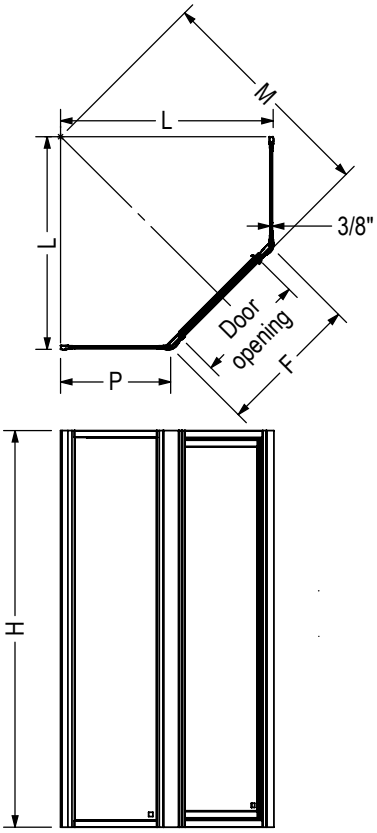

Code	Description	H	M Adjustable	L Adjustable	Door opening	F Adjustable	P Adjustable	Wall adjustment
137700	Silhouette Plus Pivot 36" x 70"	69 5/8"	32 1/4" - 35 1/8"	31 1/4" - 33 3/4"	17 3/4"	23 3/8" - 24 7/8"	14 3/8" - 15 7/8"	2 1/2"
137710	Silhouette Plus Pivot 38" x 70"	69 5/8"	37 1/4" - 40 1/8"	34 3/4" - 37 1/4"	17 1/2"	23 3/8" - 24 7/8"	17 7/8" - 19 3/8"	2 1/2"
137720	Silhouette Plus Pivot 36" x 70"	69 5/8"	34 5/8" - 37 1/2"	33 1/8" - 35 3/4"	18 1/2"	24 1/8" - 25 5/8"	15 3/4" - 17 1/4"	2 1/2"
137730	Silhouette Plus Pivot 38 - 40" x 70"	69 5/8"	37 5/8" - 40 1/2"	35 1/4" - 37 7/8"	18 1/2"	24 1/8" - 25 5/8"	17 7/8" - 19 3/8"	2 1/2"
137750	Silhouette Plus Pivot 38 - 40" x 70"	69 5/8"	38 1/8" - 41"	37" - 39 1/2"	22 1/4"	27 7/8" - 29 3/8"	16 7/8" - 18 3/8"	2 1/2"
137760	Silhouette Plus Pivot 42" x 70"	69 5/8"	41" - 43 7/8"	39" - 41 1/2"	22 1/4"	27 7/8" - 29 3/8"	18 7/8" - 20 3/8"	2 1/2"

All dimensions are approximate. Structure measurement must be verified againtst the unit to ensure proper fit.

Tub Doors

Uptown with Bypass tub door

Edge Access Tub Screen

Material : Tempered Glass

Features

- Tempered glass with easy to clean Lotus glass protection
- Double Pivoting panels: makes it easy to clean the panels and the tub
- Easy access to faucets
- Folds and pivots outward, maximizes the tub access to provide care
- Ideal for slanted ceilings
- Frameless 6 mm tempered glass
- Fast and easy installation with a low number of parts
- Reversible, allowing for left or right opening to accommodate different bathroom layouts.
- Comes with a limited 10 year warranty, ensuring customer satisfaction and peace of mind.

EDGE ACCESS PIVOT 42 X 56 - 6MM - 137600

SKU	Color	Dimensions & Weight	Packaging	MSRP
137600-900-084-000	Clear / Chrome	42” - 42” x 56” / 56 lb	2.8 ft^3	$ 824
137600-900-340-000	Clear / Matte Black			$ 885

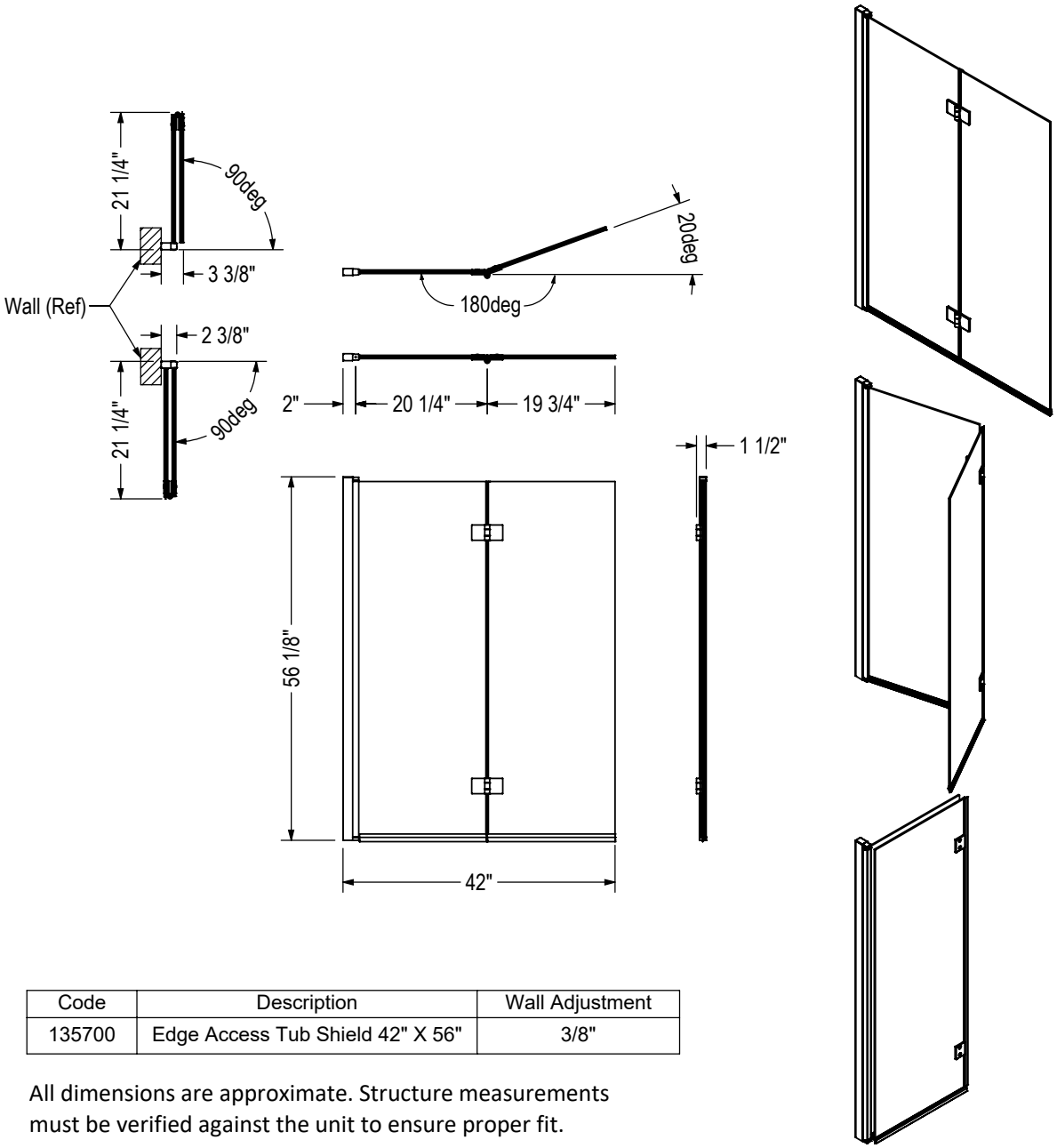

Code	Description	Wall Adjustment
135700	Edge Access Tub Shield 42" X 56"	3/8"

All dimensions are approximate. Structure measurements must be verified against the unit to ensure proper fit.

Edge Duo Tub Screen

Material : Tempered Glass

Features

- Thin interface makes it compatible with most standard tubs, offering flexibility for remodels or upgrades
- Double glass; 1 fixed panel 24 in. and 1 pivoting panel 18 in. this gives you a wide access to get in and out while making the corner watertight
- Easy access to faucets
- Space-saving design makes it perfect for compact bathrooms without compromising on functionality or style
- Frameless 8 mm tempered glass with a square pivot
- Fast and easy installation with a low number of parts
- Reversible, allowing for left or right opening to accommodate different bathroom layouts.
- The moving panel can tilt slightly inside the tub to prevent water spill
- Lotus super-hydrophobic easy clean glass protection included, to make cleaning a breeze

EDGE DUO 42 X 58 - 8MM - 137502

SKU	Color	Dimensions & Weight	Packaging	MSRP
137502-900-084-000	Clear / Chrome	41” - 42” x 58” / 43 lb	2.71 ft^3	$ 979
137502-900-305-000	Clear / Brushed Nickel			$ 1054

STANDARD

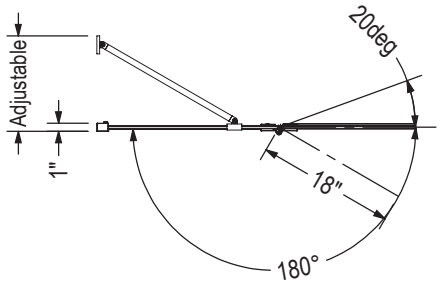

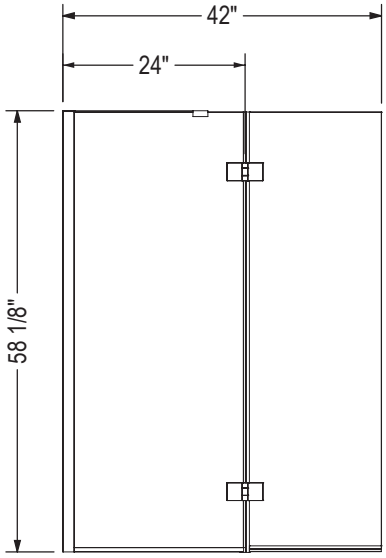

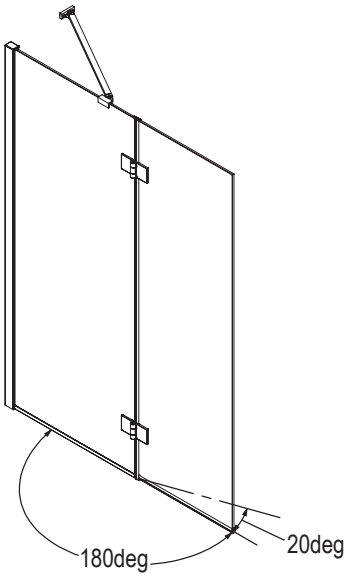

Code	Description	Wall Adjustment
137502	EDGE Duo Tub 42" X 58"	3/8"

All dimensions are approximate. Structure measurements must be verified against the unit to ensure proper fit.

Edge Square Tub Screen

Material : Tempered Glass

Features

- Thin interface makes it compatible with most standard tubs, offering flexibility for remodels or upgrades
- Space-saving design makes it perfect for compact bathrooms without compromising on functionality or style
- Easy access to faucets
- Pivots inward and outward, maximizes the tub access to provide care
- Frameless 8 mm tempered glass with a square pivot
- Fast and easy installation with a low number of parts
- Reversible, allowing for left or right opening to accommodate different bathroom layouts.
- Durable construction ensures long-lasting performance and resistance to daily wear and tear
- Lotus super-hydrophobic easy clean glass protection included, to make cleaning a breeze

EDGE SQUARE 34 X 58 - 8MM - 137501

SKU	Color	Dimensions & Weight	Packaging	MSRP
137501-900-084-000	Clear / Chrome	33” - 34” x 58” / 35 lb	2.5 ft^3	$ 737
137501-900-305-000	Clear / Brushed Nickel			$ 791

STANDARD

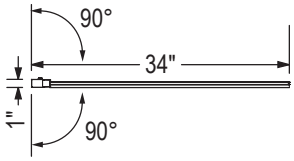

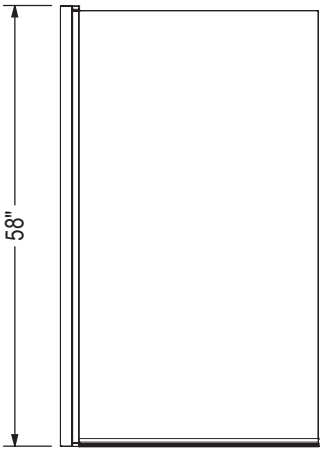

Code	Description	Wall Adjustment
137501	EDGE Square Tub 34" X 58"	3/8"

All dimensions are approximate. Structure measurements must be verified against the unit to ensure proper fit.

Edge Tub Screen

Material : Tempered Glass

Features

- Thin interface makes it compatible with most standard tubs, offering flexibility for remodels or upgrades
- Space-saving design makes it perfect for compact bathrooms without compromising on functionality or style
- Easy access to faucets
- Pivots inward and outward, maximizes the tub access to provide care
- Frameless 6 mm tempered glass with a round pivot
- Fast and easy installation with a low number of parts
- Reversible, allowing for left or right opening to accommodate different bathroom layouts.
- Durable construction ensures long-lasting performance and resistance to daily wear and tear
- Lotus super-hydrophobic easy clean glass protection included, to make cleaning a breeze

EDGE 30 X 55 ½ - 6MM - 137500

SKU	Color	Dimensions & Weight	Packaging	MSRP
137500-900-084-000	Clear / Chrome	29” - 30” x 55 1/2” / 37 lb	3.44 ft^3	$ 666

STANDARD

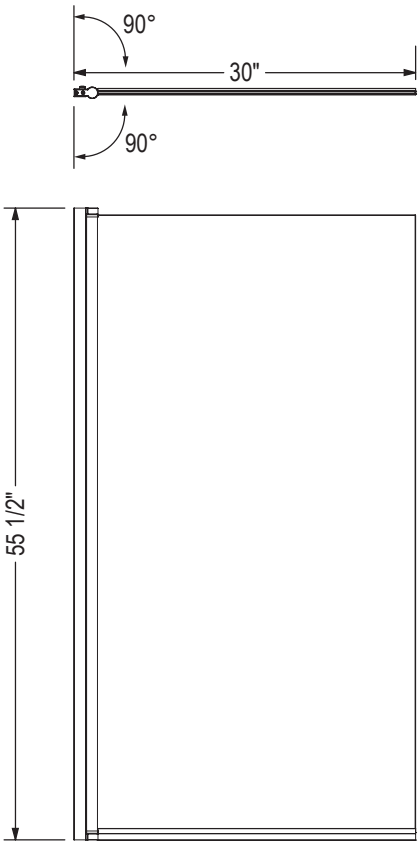

Code	Description	Wall Adjustment
137500	EDGE Tub 30" X 55 1/2"	3/8"

All dimensions are approximate. Structure measurements must be verified against the unit to ensure proper fit.

Vela Tub Door

Material : Tempered Glass

Features

- Rollers and handle offered in 7 different finishes (monochrome or mix-finishes)
- 59” high clear glass panel 8 mm (5/16”) tempered glass with Lotus easy clean protection
- Detachable door guide to distance the glass when cleaning
- Reversible tub shower door for left or right opening
- This configuration is shipped in 2 boxes

VELA 56 ½-59 X 59 - 8MM - 138480

SKU	Color	Dimensions & Weight	Packaging	MSRP
138480-900-084-000	Clear / Chrome	56 1/2” - 59” x 59” / 120 lb	8.82 ft^3	$ 1615
138480-900-280-000	Clear / Chrome and Matte White			$ 1978
138480-900-305-000	Clear / Brushed Nickel			$ 1683
138480-900-340-000	Clear / Matte Black			$ 1751
138480-900-350-000	Clear / Chrome and Matte Black			$ 1683
138480-900-360-000	Clear / Matte Black and Chrome			$ 1751
138480-900-370-000	Clear / Matte Black and Brushed Nickel			$ 1751
138480-900-380-000	Clear / Matte Black and Brushed Gold			$ 1855

ACCESSORIES

SKU	Description	MSRP
10060311	Corner glass shelf (9 3/8 x 9 3/8 in.) (sold separately) 10 mm frosted glass with a clear band along the edge Compatible with Utile and tile shower walls	$ 174

STANDARD

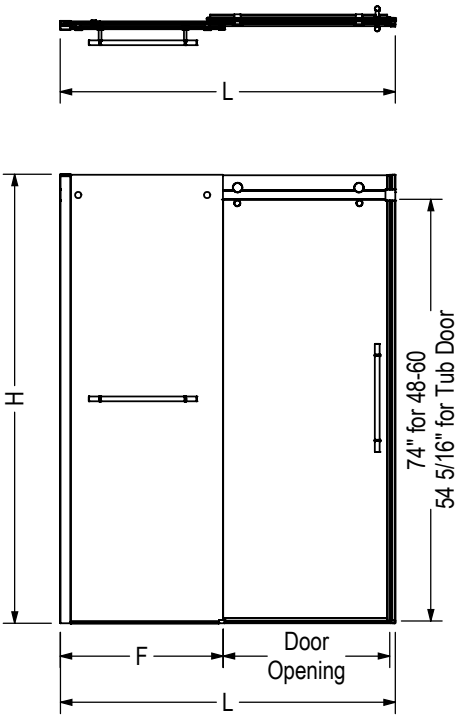

Code	Description	H	L Adjustable	F	Door Opening	Wall Adjustment
138460	Vela 78 3/4" x 47" without towel bar	78 3/4"	44 1/2" - 47"	22 1/2"	16 1/4" - 18 3/4"	1"
138465	Vela 78 3/4" x 47" with towel bar	78 3/4"	44 1/2" - 47"	22 1/2"	16 1/4" - 18 3/4"	1"
138470	Vela 78 3/4" x 59" without towel bar	78 3/4"	56 1/2" - 59"	28 5/8"	22 1/8" - 24 5/8"	1"
138475	Vela 78 3/4" x 59" with towel bar	78 3/4"	56 1/2" - 59"	28 5/8"	22 1/8" - 24 5/8"	1"
138480	Vela 59" x 59" without towel bar	59"	56 1/2" - 59"	28 5/8"	22 1/8" - 24 5/8"	1"
138485	Vela 59" x 59" with towel bar	59"	56 1/2" - 59"	28 5/8"	22 1/8" - 24 5/8"	1"

All dimensions are approximate. Structure measurements must be verified against the unit to ensure proper fit.

Vela Tub Door with Towel Bar

Material : Tempered Glass

Features

- Rollers and handle offered in 7 different finishes (monochrome or mix-finishes)
- 59” high clear glass panel 8 mm (5/16”) tempered glass with Lotus easy clean protection
- Detachable door guide to distance the glass when cleaning
- Reversible tub shower door for left or right opening
- This configuration is shipped in 2 boxes
- With a convenient towel bar on the fix panel

VELA 56 ½-59 X 59 - 8MM - 138485

SKU	Color	Dimensions & Weight	Packaging	MSRP
138485-900-084-000	Clear / Chrome	56 1/2” - 59” x 59” / 120 lb	8.82 ft^3	$ 1718
138485-900-280-000	Clear / Chrome and Matte White			$ 2099
138485-900-305-000	Clear / Brushed Nickel			$ 1785
138485-900-340-000	Clear / Matte Black			$ 1855
138485-900-350-000	Clear / Chrome and Matte Black			$ 1785
138485-900-360-000	Clear / Matte Black and Chrome			$ 1855
138485-900-370-000	Clear / Matte Black and Brushed Nickel			$ 1855
138485-900-380-000	Clear / Matte Black and Brushed Gold			$ 1956

ACCESSORIES

SKU	Description	MSRP
10060311	Corner glass shelf (9 3/8 x 9 3/8 in.) (sold separately) 10 mm frosted glass with a clear band along the edge Compatible with Utile and tile shower walls	$ 174

STANDARD

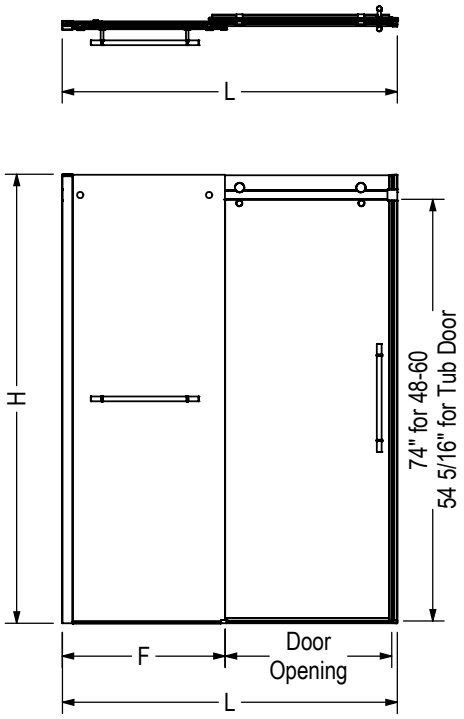

Code	Description	H	L Adjustable	F	Door Opening	Wall Adjustment
138460	Vela 78 3/4" x 47" without towel bar	78 3/4"	44 1/2" - 47"	22 1/2"	16 1/4" - 18 3/4"	1"
138465	Vela 78 3/4" x 47" with towel bar	78 3/4"	44 1/2" - 47"	22 1/2"	16 1/4" - 18 3/4"	1"
138470	Vela 78 3/4" x 59" without towel bar	78 3/4"	56 1/2" - 59"	28 5/8"	22 1/8" - 24 5/8"	1"
138475	Vela 78 3/4" x 59" with towel bar	78 3/4"	56 1/2" - 59"	28 5/8"	22 1/8" - 24 5/8"	1"
138480	Vela 59" x 59" without towel bar	59"	56 1/2" - 59"	28 5/8"	22 1/8" - 24 5/8"	1"
138485	Vela 59" x 59" with towel bar	59"	56 1/2" - 59"	28 5/8"	22 1/8" - 24 5/8"	1"

All dimensions are approximate. Structure measurements must be verified against the unit to ensure proper fit.

Halo Tub Door

Material : Tempered Glass

Features

- 8 mm tempered glass panels
- Available in 4 finishes: Chrome, Brushed Nickel, Dark Bronze, Matte Black
- Compatible with MAAX's Utile tub wall system, allowing for a seamless and coordinated installation with the shower door, creating a cohesive and stylish bathroom design
- Sliding door configuration features one sliding glass panel and one stationary panel
- Ball bearing roller technology along a friction-free stainless steel rail system for a smooth and quiet opening
- The frameless design brings a sense of spaciousness to the room and creates a sleek, minimalist look.
- Glass panels come with the Lotus Easy Clean Glass Protection to repel soap and water stains for carefree maintenance
- Compatible with MAAX's Utile tub wall system, allowing for a seamless and coordinated installation with the shower door, creating a cohesive and stylish bathroom design
- Warranty: 10 years

HALO 56 ½-59 X 59 - 8MM - 139398

SKU	Color	Dimensions & Weight	Packaging	MSRP
139398-900-084-000	Clear / Chrome	56 1/2” - 59” x 59” / 131 lb	7.7 ft^3	$ 1342
139398-900-173-000	Clear / Dark Bronze	56 1/2” - 59” x 59” / 108 lb		$ 1445
139398-900-305-000	Clear / Brushed Nickel			$ 1411
139398-900-340-000	Clear / Matte Black	56 1/2” - 59” x 59” / 118 lb		$ 1445

Kameleon SC Tub Door - 8 mm

Material : Tempered Glass

Features

- Innovative SOFT CLOSE by MAAX prevents slamming
- Silent guide eliminates the rattling noise
- High quality rollers for smooth glide
- Safety features: header lock and panel anti-jump
- 8 mm tempered glass and frame color choice
- Modern towel bar
- Reversible header: one side round and one side flat

KAMELEON SC 55-59 X 57 - 8MM - 134670

SKU	Color	Dimensions & Weight	Packaging	MSRP
134670-900-084-000	Clear / Chrome	55” - 59” x 57” / 110 lb	4.58 ft^3	$ 1233
134670-900-172-000	Clear / Dark Bronze			$ 1310
134670-900-305-000	Clear / Brushed Nickel			$ 1288
134670-900-340-000	Clear / Matte Black			$ 1310

COMMON OPTIONS

SKU	Description	MSRP
OPT20246-084	24 in. T-round towel bar Available colours: Chrome **(084)**, Dark Bronze **(172)** and Brushed Nickel **(305)**	$ 125
OPT20246-305		$ 133
OPT20246-172		$ 137
OPT20248-084	24 in. Square towel bar Available colours: Chrome **(084)**, Dark Bronze **(172)** and Brushed Nickel **(305)**	$ 125
OPT20248-305		$ 133
OPT20248-172		$ 137

ACCESSORIES

SKU	Description	MSRP
10068376-305	24 in. Square towel bar Available colours: Chrome **(084)**, Dark Bronze **(172)** and Brushed Nickel **(305)**	$ 284
10068376-172		$ 293
10068376-084		$ 272
10068402-092-600	Watertight kit for Mirolin tub shower and shower	$ 106
10068410-005-601	Soft Close by MAAX for Kameleon/Aura doors only	$ 204

STANDARD

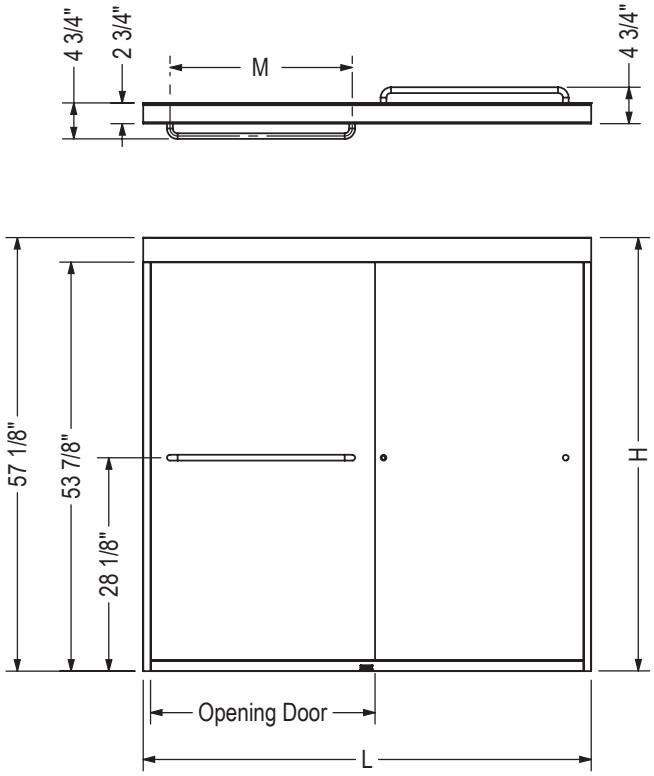

Description	Opening Door Adjustable	M	L Adjustable	H
Tub Door 55"x59"x8mm	23 1/2" - 27 1/2"	24"	55" - 59"	57"

All dimensions are approximate. Structure measurements must be verified against the unit to ensure proper fit.

Go to Table of Contents

Kameleon SC Tub Doors - 6 mm

Material : Tempered Glass

Features

- Innovative SOFT CLOSE by MAAX prevents slamming
- Silent guide eliminates the rattling noise
- High quality rollers for smooth glide
- Safety features: header lock and panel anti-jump
- 6 mm tempered glass and frame color choice
- Modern towel bar
- Reversible header: one side round and one side flat

KAMELEON SC 51-55 X 57 - 6MM - 134660

SKU	Color	Dimensions & Weight	Packaging	MSRP
134660-900-084-000	Clear / Chrome	51” - 55” x 57” / 85 lb	4.11 ft^3	$ 1041

COMMON OPTIONS

SKU	Description	MSRP
OPT20246-084	24 in. T-round towel bar Available colours: Chrome **(084)**, Dark Bronze **(172)** and Brushed Nickel **(305)**	$ 125
OPT20246-305		$ 133
OPT20246-172		$ 137
OPT20248-084	24 in. Square towel bar Available colours: Chrome **(084)**, Dark Bronze **(172)** and Brushed Nickel **(305)**	$ 125
OPT20248-305		$ 133
OPT20248-172		$ 137

ACCESSORIES

SKU	Description	MSRP
10068376-305	24 in. Square towel bar Available colours: Chrome **(084)**, Dark Bronze **(172)** and Brushed Nickel **(305)**	$ 284
10068376-172		$ 293
10068376-084		$ 272
10068402-092-600	Watertight kit for Mirolin tub shower and shower	$ 106
10068410-005-601	Soft Close by MAAX for Kameleon/Aura doors only	$ 204

STANDARD

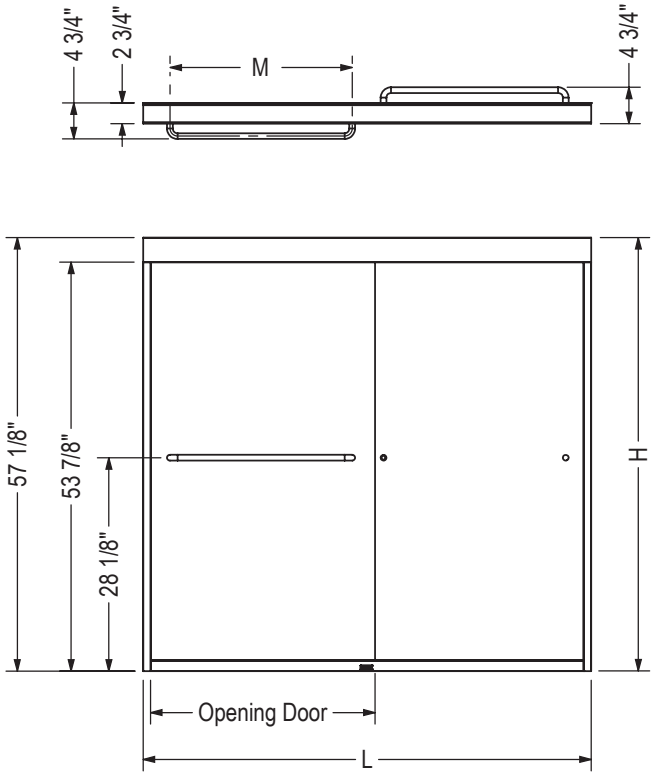

Description	Opening Door Adjustable	M	L Adjustable	H
Tub Door 51"x55"x6mm	21 1/2"- 25 1/2"	24"	51" - 55"	57"
Tub Door 55"x59"x6mm	23 1/2" - 27 1/2"	24"	55" - 59"	57"

All dimensions are approximate. Structure measurements must be verified against the unit to ensure proper fit.

Kameleon SC Tub Doors - 6 mm

Material : Tempered Glass

Features

- Innovative SOFT CLOSE by MAAX prevents slamming
- Silent guide eliminates the rattling noise
- High quality rollers for smooth glide
- Safety features: header lock and panel anti-jump
- 6mm tempered glass and frame color choice
- Modern towel bar
- Reversible header: one side round and one side flat

KAMELEON SC 55-59 X 57 - 6MM - 134661

SKU	Color	Dimensions & Weight	Packaging	MSRP
134661-900-084-000	Clear / Chrome	55” - 59” x 57” / 85 lb	4.58 ft^3	$ 1079
134661-900-172-000	Clear / Dark Bronze			$ 1143
134661-900-305-000	Clear / Brushed Nickel			$ 1130
134661-900-340-000	Clear / Matte Black			$ 1143

COMMON OPTIONS

SKU	Description	MSRP
OPT20246-084	24 in. T-round towel bar Available colours: Chrome **(084)**, Dark Bronze **(172)** and Brushed Nickel **(305)**	$ 125
OPT20246-305		$ 133
OPT20246-172		$ 137
OPT20248-084	24 in. Square towel bar Available colours: Chrome **(084)**, Dark Bronze **(172)** and Brushed Nickel **(305)**	$ 125
OPT20248-305		$ 133
OPT20248-172		$ 137

ACCESSORIES

SKU	Description	MSRP
10068376-305	24 in. Square towel bar Available colours: Chrome **(084)**, Dark Bronze **(172)** and Brushed Nickel **(305)**	$ 284
10068376-172		$ 293
10068376-084		$ 272
10068402-092-600	Watertight kit for Mirolin tub shower and shower	$ 106
10068410-005-601	Soft Close by MAAX for Kameleon/Aura doors only	$ 204

STANDARD

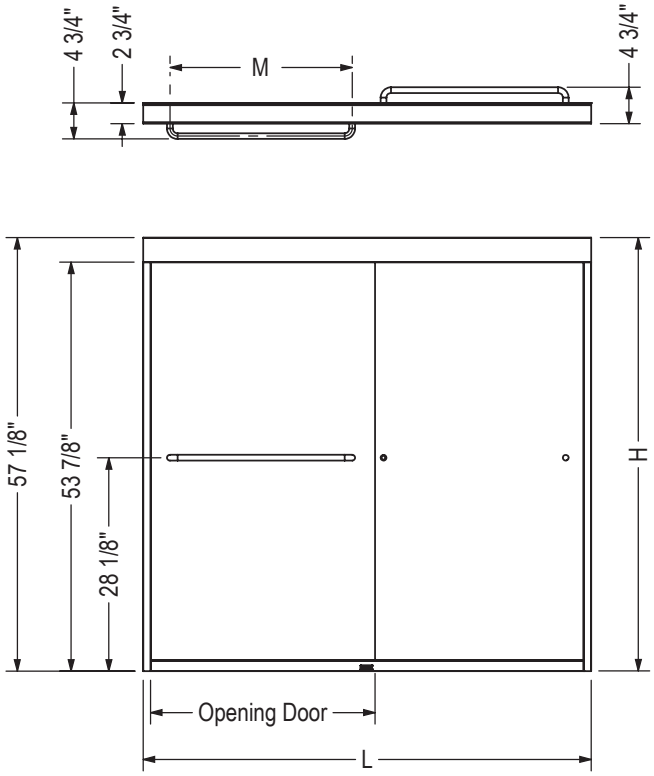

Description	Opening Door Adjustable	M	L Adjustable	H
Tub Door 51"x55"x6mm	21 1/2"- 25 1/2"	24"	51" - 55"	57"
Tub Door 55"x59"x6mm	23 1/2" - 27 1/2"	24"	55" - 59"	57"

All dimensions are approximate. Structure measurements must be verified against the unit to ensure proper fit.

Kameleon Tub Door - 8 mm

Material : Tempered Glass

Features

- Silent guide eliminates the rattling noise
- High quality rollers for smooth glide
- Safety features: header lock and panel anti-jump
- 8 mm tempered glass and frame color choice
- Modern towel bar
- Reversible header: one side round and one side flat

KAMELEON 55-59 X 57 - 8MM - 134573

SKU	Color	Dimensions & Weight	Packaging	MSRP
134573-900-084-000	Clear / Chrome	55” - 59” x 57” / 110 lb	4.58 ft³	$ 1104
134573-900-172-000	Clear / Dark Bronze			$ 1181
134573-900-305-000	Clear / Brushed Nickel			$ 1159
134573-900-340-000	Clear / Matte Black			$ 1181

COMMON OPTIONS

SKU	Description	MSRP
OPT20246-084	24 in. T-round towel bar Available colours: Chrome **(084)**, Dark Bronze **(172)** and Brushed Nickel **(305)**	$ 125
OPT20246-305		$ 133
OPT20246-172		$ 137
OPT20248-084	24 in. Square towel bar Available colours: Chrome **(084)**, Dark Bronze **(172)** and Brushed Nickel **(305)**	$ 125
OPT20248-305		$ 133
OPT20248-172		$ 137

ACCESSORIES

SKU	Description	MSRP
10068376-305	24 in. Square towel bar Available colours: Chrome **(084)**, Dark Bronze **(172)** and Brushed Nickel **(305)**	$ 284
10068376-172		$ 293
10068376-084		$ 272
10068402-092-600	Watertight kit for Mirolin tub shower and shower	$ 106
10068410-005-601	Soft Close by MAAX for Kameleon/Aura doors only	$ 204

STANDARD

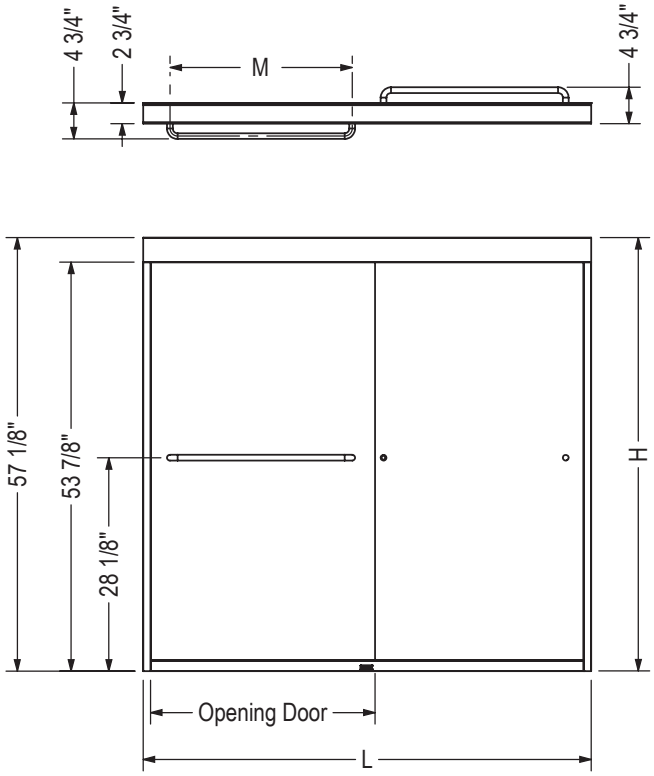

Description	Opening Door Adjustable	M	L Adjustable	H
Tub Door 55"x59"x8mm	23 1/2" - 27 1/2"	24"	55" - 59"	57"

All dimensions are approximate. Structure measurements must be verified against the unit to ensure proper fit.

Kameleon Tub Doors - 6 mm

Material : Tempered Glass

Features

- Tub door for alcove installation
- Bi-directional glass panels for flexible entry and easy access on the left or right-hand side
- Silent guide glides smoothly and quietly, ensuring a seamless shower experience
- 6 mm (1/4") tempered glass ensuring sturdiness and stability
- The minimalist design maximizes the opening space, allowing easy entry and exit into the shower space
- Safety features that keep the glass panel in place: header lock and panel anti-jump
- Reversible header: one side round and one side flat, so you can decide which style suits you
- The horizontal handle can double as a stylish towel bar
- Despite its premium features, the shower door is offered at an affordable price point.

KAMELEON 55-59 X 57 - 6MM - 134561

SKU	Color	Dimensions & Weight	Packaging	MSRP
134561-900-084-000	Clear / Chrome	55" - 59" x 57" / 75 lb	4.13 ft^3	$ 950
134561-900-172-000	Clear / Dark Bronze			$ 1017
134561-900-305-000	Clear / Brushed Nickel			$ 997
134561-900-340-000	Clear / Matte Black			$ 1017
134561-927-084-000	Fluted / Chrome			$ 1117
134561-927-172-000	Fluted / Dark Bronze			$ 1195
134561-927-305-000	Fluted / Brushed Nickel			$ 1173
134561-927-340-000	Fluted / Matte Black			$ 1195
134561-978-084-000	Frosted / Chrome			$ 1123
134561-978-172-000	Frosted / Dark Bronze			$ 1198
134561-978-305-000	Frosted / Brushed Nickel			$ 1177
134561-978-340-000	Frosted / Matte Black			$ 1165

COMMON OPTIONS

SKU	Description	MSRP
OPT20246-084	24 in. T-round towel bar Available colours: Chrome **(084)**, Dark Bronze **(172)** and Brushed Nickel **(305)**	$ 125
OPT20246-305		$ 133
OPT20246-172		$ 137
OPT20248-084	24 in. Square towel bar Available colours: Chrome **(084)**, Dark Bronze **(172)** and Brushed Nickel **(305)**	$ 125
OPT20248-305		$ 133
OPT20248-172		$ 137

ACCESSORIES

SKU	Description	MSRP
10068376-305	24 in. Square towel bar Available colours: Chrome **(084)**, Dark Bronze **(172)** and Brushed Nickel **(305)**	$ 284
10068376-172		$ 293
10068376-084		$ 272
10068402-092-600	Watertight kit for Mirolin tub shower and shower	$ 106
10068410-005-601	Soft Close by MAAX for Kameleon/Aura doors only	$ 204

STANDARD

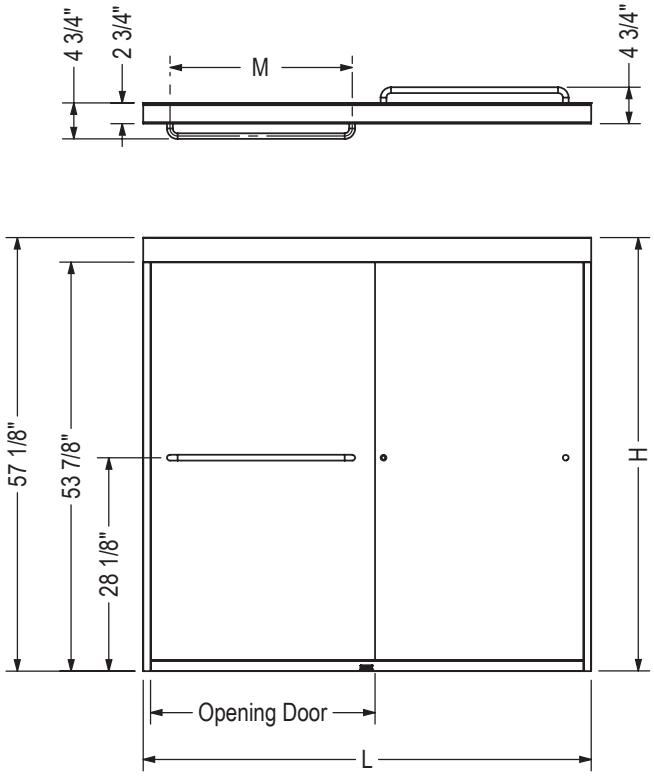

Description	Opening Door Adjustable	M	L Adjustable	H
Tub Door 51"-55" x 57", 6mm	21 1/2"- 25 1/2"	24"	51" - 55"	57"
Tub Door 55"-59"x 57", 6mm	23 1/2" - 27 1/2"	24"	55" - 59"	57"

All dimensions are approximate. Structure measurements must be verified against the unit to ensure proper fit.

Kameleon Tub Doors - 6 mm

Material : Tempered Glass

Features

- Tub door for alcove installation
- Bi-directional glass panels for flexible entry and easy access on the left or right-hand side
- Silent guide glides smoothly and quietly, ensuring a seamless shower experience
- 6 mm (1/4") tempered glass ensuring sturdiness and stability
- The minimalist design maximizes the opening space, allowing easy entry and exit into the shower space
- Safety features that keep the glass panel in place: header lock and panel anti-jump
- Reversible header: one side round and one side flat, so you can decide which style suits you
- The horizontal handle can double as a stylish towel bar
- Despite its premium features, the shower door is offered at an affordable price point.

KAMELEON 51-55 X 57 - 6MM - 134560

SKU	Color	Dimensions & Weight	Packaging	MSRP
134560-900-084-000	Clear / Chrome	51" - 55" x 57" / 75 lb	4.13 ft³	$ 911
134560-900-340-000	Clear / Matte Black			$ 948

COMMON OPTIONS

SKU	Description	MSRP
OPT20246-084	24 in. T-round towel bar Available colours: Chrome **(084)**, Dark Bronze **(172)** and Brushed Nickel **(305)**	$ 125
OPT20246-305		$ 133
OPT20246-172		$ 137
OPT20248-084	24 in. Square towel bar Available colours: Chrome **(084)**, Dark Bronze **(172)** and Brushed Nickel **(305)**	$ 125
OPT20248-305		$ 133
OPT20248-172		$ 137

ACCESSORIES

SKU	Description	MSRP
10068376-305	24 in. Square towel bar Available colours: Chrome **(084)**, Dark Bronze **(172)** and Brushed Nickel **(305)**	$ 284
10068376-172		$ 293
10068376-084		$ 272
10068402-092-600	Watertight kit for Mirolin tub shower and shower	$ 106
10068410-005-601	Soft Close by MAAX for Kameleon/Aura doors only	$ 204

Go to Table of Contents

STANDARD

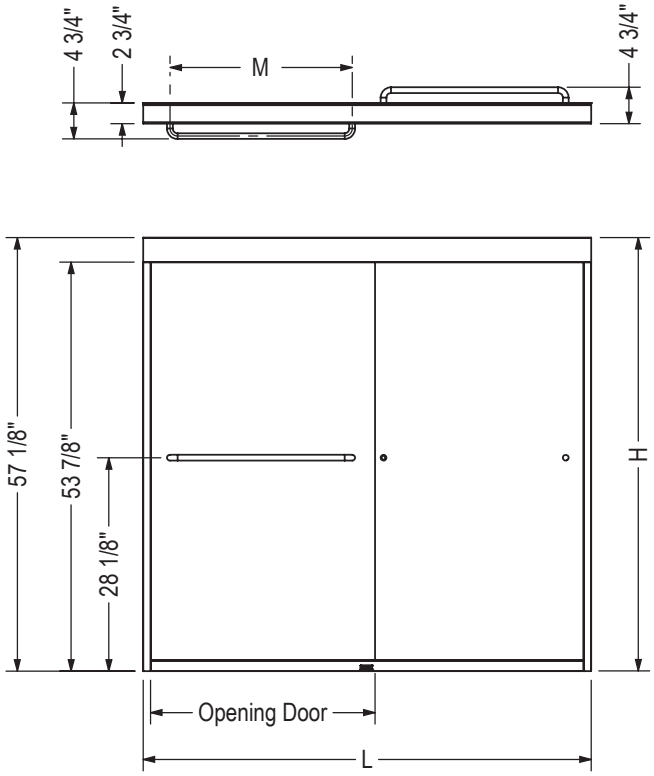

Description	Opening Door Adjustable	M	L Adjustable	H
Tub Door 51"x55"x6mm	21 1/2"- 25 1/2"	24"	51" - 55"	57"
Tub Door 55"x59"x6mm	23 1/2" - 27 1/2"	24"	55" - 59"	57"

All dimensions are approximate. Structure measurements must be verified against the unit to ensure proper fit.

Duel Tub Door

Material : Tempered Glass

Features

- 8 mm (5/16") tempered glass with Lotus easy clean protection
- Fits tub showers with 55 1/2 in. wall clearance, glass extends to 59 in.
- 3in of lateral adjustment to fit many shower opening
- Designed in North America
- Sleek and square elements for a modern look
- High quality rollers for smooth glide
- The frameless design brings a sense of spaciousness to the room and creates a sleek, minimalist look.
- Header leveling and locking System innovation allows for header adjustment
- 3/4" out-of-plumb adjustment

DUEL 56-59 X 55 1/2-59 - 136270

SKU	Color	Dimensions & Weight	Packaging	MSRP
136270-900-084-000	Clear / Chrome	56" - 59" x 59" / 106 lb	3.5 ft^3	$ 1253
136270-900-173-000	Clear / Dark Bronze			$ 1355
136270-900-280-000	Clear / Chrome and Matte White			$ 1345
136270-900-289-000	Clear / Brushed Nickel and Matte Black			$ 1415
136270-900-290-000	Clear / Brushed Nickel and Matte White			$ 1415
136270-900-305-000	Clear / Brushed Nickel			$ 1323
136270-900-340-000	Clear / Matte Black			$ 1355
136270-900-350-000	Clear / Chrome and Matte Black			$ 1345
136270-900-360-000	Clear / Matte Black and Chrome			$ 1448
136270-900-380-000	Clear / Matte Black and Brushed Gold			$ 1448

ACCESSORIES

SKU	Description	MSRP
10068850-291-600	Mixed Finish Hardware Replacement Kit for Duel and Duel Alto. Available colors: Chrome **(084)**, Matte White **(291)**, Matte Black **(340)** and Brushed Gold **(343)**	$ 109
10068850-084-600		$ 109
10068850-343-600		$ 109
10068850-340-600		$ 109

Go to Table of Contents

STANDARD

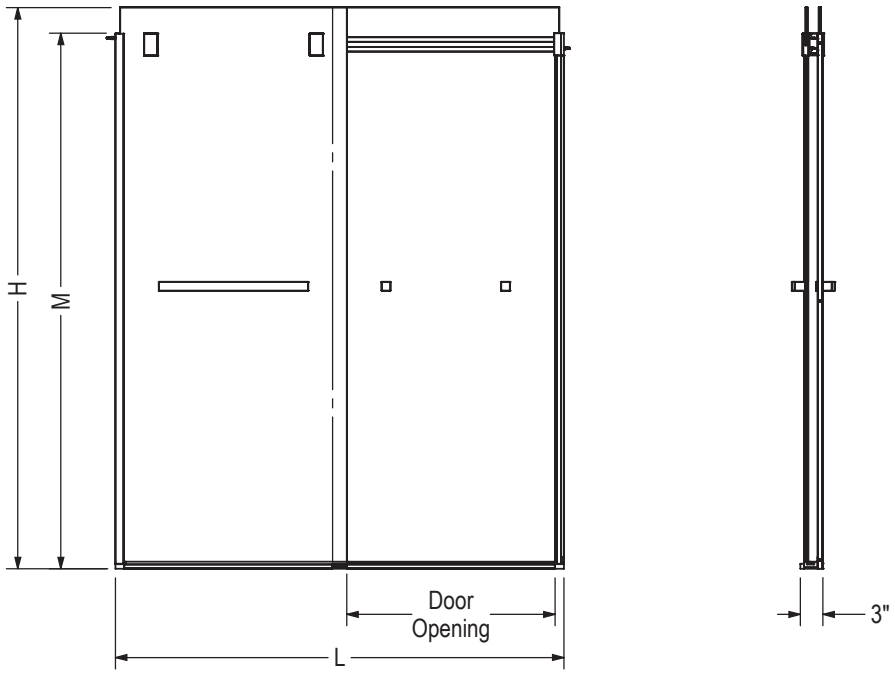

Code	Description	H	M	L Adjustable	Door Opening	Wall Adjustment
136270	Duel 56" - 59" x 55 1/2"	59"	55 1/2"	56" - 59"	24 1/2" - 27 1/2"	3/4"
136271	Duel 44" - 47" x 70 1/2"	74"	70 1/2"	44" - 47"	18 1/2" - 21 1/2"	3/4"
136272	Duel 56" - 59" x 70 1/2"	74"	70 1/2"	56" - 59"	24 1/2" - 27 1/2"	3/4"

All dimensions are approximate. Structure measurements must be verified against the unit to ensure proper fit.

Go to Table of Contents

Incognito 57 Shaker Tub Door

Material : Tempered Glass

Features

- 8mm tempered glass provides durability and safety
- Frameless bypass tubshower door for alcove installation
- Easy, and intuitive parts on parts installation with up to 1/2 in. out of plumb adjustment
- Reversible for left or right-hand opening, giving you a flexible product for your bathroom needs
- Convenient towel bar perfectly integrated in the glass design
- The unique handle features large knobs on the interior for easier opening and closing of the door
- The door catchers prevents the doors from opening unwantedly, which enhances product watertight seal
- Easy installation process saves time and hassle, perfect for any DIY project
- Integrated Anti-jump mechanism provides a smooth, effortless and quiet sliding operation for your shower

INCOGNITO 57 SHAKER 56-59 X 56 3/4 IN. 8MM TUB DOOR - 135330

SKU	Color	Dimensions & Weight	Packaging	MSRP
135330-972-340-000	Shaker / Matte Black	56” - 59” x 56 3/4” / 102 lb	3.84 ft^3	$ 1355

STANDARD

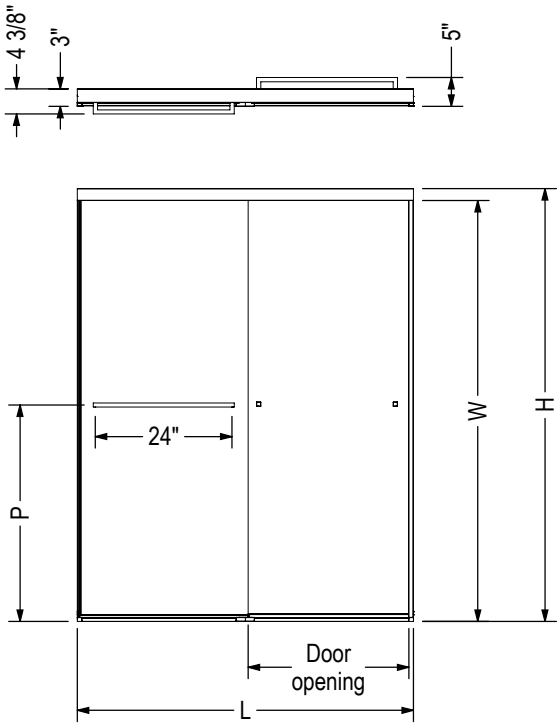

Code	Description	H	W	L Adjustable	Door opening	P	Wall adjustment
135331	Incognito 76 Shaker 8mm 76" x 44 - 47"	76"	73 7/8"	44" - 47"	18 1/4" - 22 1/4"	38"	1/2"
135332	Incognito 76 Shaker 8mm 76" x 56 - 59"	76"	73 7/8"	56" - 59"	24 1/4" - 28 1/4"	38"	1/2"
135330	Incognito Shaker 8mm 56 3/4" x 56 - 59"	56 3/4"	54 5/8"	56" - 59"	24 1/4" - 28 1/4"	28"	1/2"

All dimensions are approximate. Structure measurements must be verified against the unit to ensure proper fit.

Incognito 57 Tub Door - 6 mm

Material : Tempered Glass

Features

- 6mm tempered glass provides durability and safety
- Frame finish available in brushed nickel, chrome, dark bronze and matte black color to complement any bathroom decor
- Semi-frameless bypass tub door for alcove installation
- Easy, and intuitive parts on parts installation with up to 1/2 in. out of plumb adjustment
- Reversible for left or right-hand opening, giving you a flexible product for your bathroom needs
- The door catchers prevents the doors from opening unwantedly, which enhances product watertight seal
- The unique handle features large knobs on the interior for easier opening and closing of the door
- Easy installation process saves time and hassle, making it a great DIY project
- Integrated Anti-jump mechanism provides a smooth, effortless and quiet sliding operation for your shower

INCOGNITO 57 56-59 X 56 3/4 IN. 6MM TUB DOOR - 139351

SKU	Color	Dimensions & Weight	Packaging	MSRP
139351-900-084-000	Clear / Chrome	56” - 59” x 56 3/4” / 80 lb	4.62 ft^3	$ 906
139351-900-173-000	Clear / Dark Bronze			$ 975
139351-900-305-000	Clear / Brushed Nickel			$ 950
139351-900-340-000	Clear / Matte Black			$ 975

STANDARD

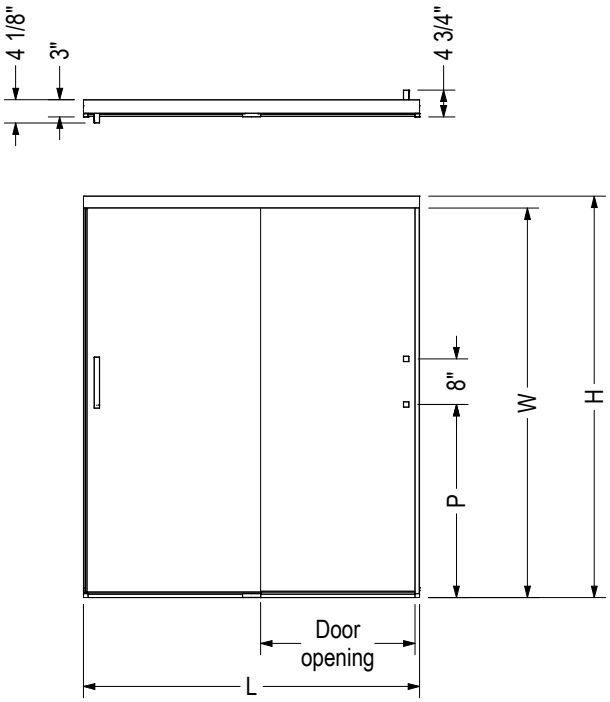

Code	Description	H	W	L Adjustable	Door Opening	P	Wall adjustment
139349	Incognito 6mm 70 1/2" x 44 - 47"	70 1/2"	68 3/8"	44" - 47''	17 1/8" - 21 1/8"	33 7/8"	1/2"
139350	Incognito 6mm 70 1/2" x 56 - 59"	70 1/2"	68 3/8"	56" - 59''	23 1/8" - 27 1/8"	33 7/8"	1/2"
139351	Incognito 6mm 56 3/4" x 56 - 59"	56 3/4"	54 5/8"	56" - 59''	23 1/8" - 27 1/8"	18 7/8"	1/2"
139352	Incognito 8mm 70 1/2" x 44 - 47"	70 1/2"	68 3/8"	44" - 47''	17 1/8" - 21 1/8"	33 7/8"	1/2"
139353	Incognito 8mm 70 1/2" x 56 - 59"	70 1/2"	68 3/8"	56" - 59''	23 1/8" - 27 1/8"	33 7/8"	1/2"
139354	Incognito 8mm 56 3/4" x 56 - 59"	56 3/4"	54 5/8"	56" - 59''	23 1/8" - 27 1/8"	18 7/8"	1/2"

All dimensions are approximate. Structure measurements must be verified against the unit to ensure proper fit.

Go to Table of Contents

Incognito 57 Tub Doors - 8 mm

Material : Tempered Glass

Features

- 8mm tempered glass provides durability and safety
- Frame finish available in brushed nickel, chrome and matte black color to complement any bathroom decor
- Semi-frameless bypass tub door for alcove installation
- Easy, and intuitive parts on parts installation with up to 1/2 in. out of plumb adjustment
- Reversible for left or right-hand opening, giving you a flexible product for your bathroom needs
- The door catchers prevents the doors from opening unwantedly, which enhances product watertight seal
- The unique handle features large knobs on the interior for easier opening and closing of the door
- Easy installation process saves time and hassle, making it a great DIY project
- Integrated Anti-jump mechanism provides a smooth, effortless and quiet sliding operation for your shower

INCOGNITO 57 51-54 X 56 3/4 IN. 8MM - 138522

SKU	Color	Dimensions & Weight	Packaging	MSRP
138522-900-084-000	Clear / Chrome	51” - 54” x 56 3/4” / 92 lb	4.14 ft^3	$ 1028
138522-900-305-000	Clear / Brushed Nickel			$ 1097
138522-900-340-000	Clear / Matte Black			$ 1124

STANDARD

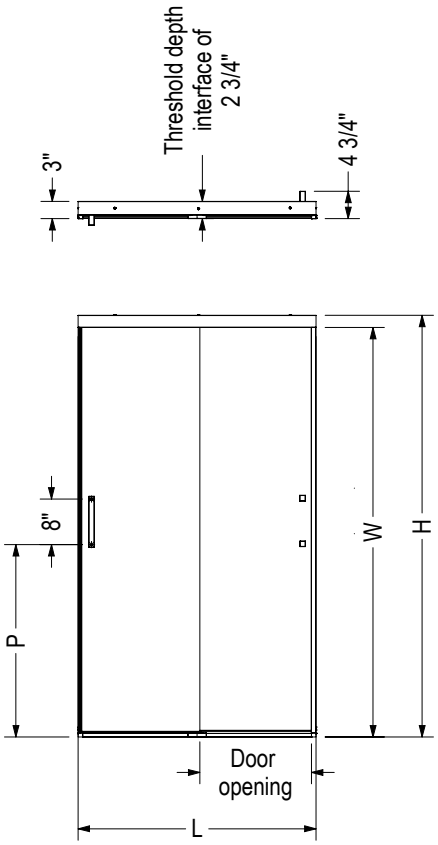

Code	Description	H	W	L Adjustable	Door opening	P	Wall adjustment
138520	Incognito 74" 39 - 42" x 74"	74"	71 7/8"	39" - 42"	16 1/2" - 19 1/2"	34 1/8"	1/2"
138521	Incognito 74" 51 - 54" x 74"	74"	68 3/8"	51" - 54"	22 1/2" - 25 1/2"	34 1/8"	1/2"
138522	Incognito 56 3/4" 51 - 54" x 56 3/4"	56 3/4"	54 5/8"	51" - 54"	22 1/2" - 25 1/2"	19 1/8"	1/2"

All dimensions are approximate. Structure measurement must be verified againtst the unit to ensure proper fit.

Incognito 57 Tub Doors - 8 mm

Material : Tempered Glass

Features

- 8mm tempered glass provides durability and safety
- Frame finish available in brushed nickel, chrome and matte black color to complement any bathroom decor
- Semi-frameless bypass tub door for alcove installation
- Easy, and intuitive parts on parts installation with up to 1/2 in. out of plumb adjustment
- Reversible for left or right-hand opening, giving you a flexible product for your bathroom needs
- The door catchers prevents the doors from opening unwantedly, which enhances product watertight seal
- The unique handle features large knobs on the interior for easier opening and closing of the door
- Easy installation process saves time and hassle, making it a great DIY project
- Integrated Anti-jump mechanism provides a smooth, effortless and quiet sliding operation for your shower

INCOGNITO 57 56-59 X 56 3/4 IN. 8MM TUB DOOR - 139354

SKU	Color	Dimensions & Weight	Packaging	MSRP
139354-900-084-000	Clear / Chrome	56” - 59” x 56 3/4” / 102 lb	4.35 ft^3	$ 1028
139354-900-305-000	Clear / Brushed Nickel			$ 1097
139354-900-340-000	Clear / Matte Black			$ 1097

STANDARD

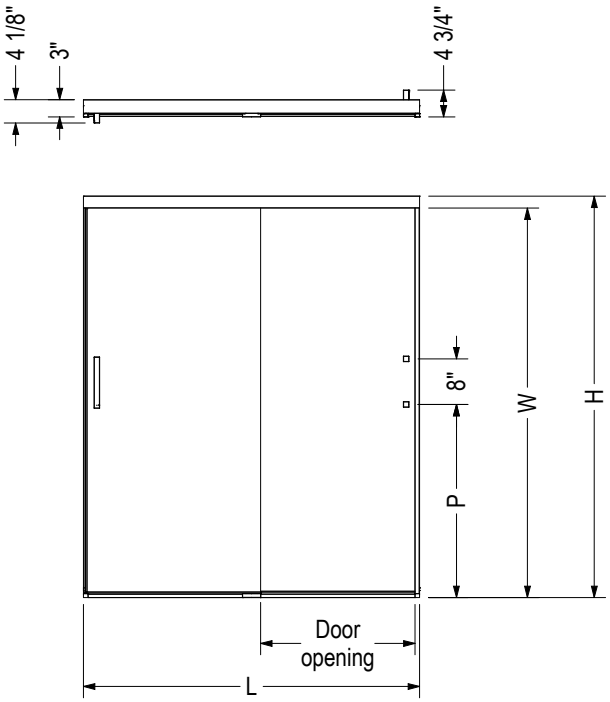

Code	Description	H	W	L Adjustable	Door Opening	P	Wall adjustment
139349	Incognito 6mm 70 1/2" x 44 - 47"	70 1/2"	68 3/8"	44" - 47''	17 1/8" - 21 1/8"	33 7/8"	1/2"
139350	Incognito 6mm 70 1/2" x 56 - 59"	70 1/2"	68 3/8"	56" - 59''	23 1/8" - 27 1/8"	33 7/8"	1/2"
139351	Incognito 6mm 56 3/4" x 56 - 59"	56 3/4"	54 5/8"	56" - 59''	23 1/8" - 27 1/8"	18 7/8"	1/2"
139352	Incognito 8mm 70 1/2" x 44 - 47"	70 1/2"	68 3/8"	44" - 47''	17 1/8" - 21 1/8"	33 7/8"	1/2"
139353	Incognito 8mm 70 1/2" x 56 - 59"	70 1/2"	68 3/8"	56" - 59''	23 1/8" - 27 1/8"	33 7/8"	1/2"
139354	Incognito 8mm 56 3/4" x 56 - 59"	56 3/4"	54 5/8"	56" - 59''	23 1/8" - 27 1/8"	18 7/8"	1/2"

All dimensions are approximate. Structure measurements must be verified against the unit to ensure proper fit.

Inverto Tub Door

Material : Tempered Glass

Features

- Frameless clear glass panels 8mm (5/16-inch) thick
- Available in 3 finishes: Chrome, Brushed Nickel, Dark Bronze
- Bathub and tub shower are sold separately, explore our wide variety of Bathub and tub shower
- Bi-directional glass panels for flexible entry and easy access to fixtures on the left or right-hand side
- The door provides a watertight seal, to prevent leaks or spills during use
- Reversible, allowing for left or right opening to accommodate different bathroom layouts
- Silent guide that eliminates the rattling noise
- Improved safety features that lock the header and firmly secures frame to door jamb
- Warranty: 10 years

INVERTO 56-59 X 55 ½-59 - 8MM - 138760

SKU	Color	Dimensions & Weight	Packaging	MSRP
138760-900-084-000	Clear / Chrome	56” - 59” x 59” / 111 lb	3.91 ft^3	$ 1594
138760-900-173-000	Clear / Dark Bronze			$ 1832
138760-900-305-000	Clear / Brushed Nickel			$ 1706

STANDARD

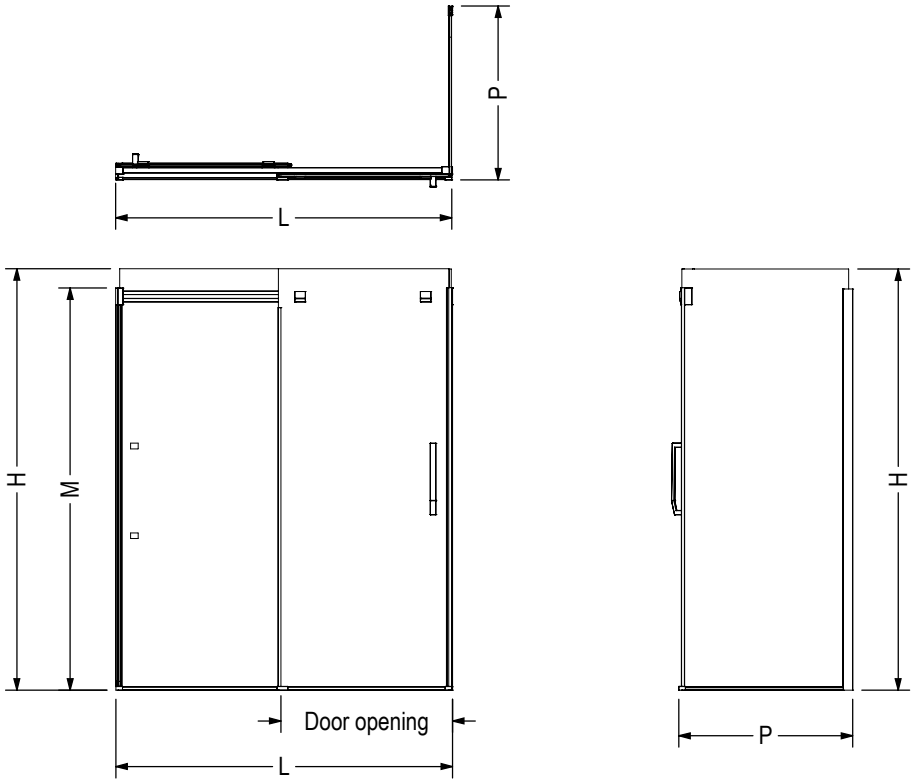

Code	Description	H	M	L Adjustable	P Adjustable	Door Opening	Wall Adjustment
138760	Inverto 56" - 59" x 55 1/2"	59"	55 1/2"	56" - 59"	-	24 1/2" - 27 1/2"	3/4"
138761	Inverto 44" - 47" x 70 1/2"	74"	70 1/2"	44" - 47"	-	18 1/2" - 21 1/2"	3/4"
138762	Inverto 56" - 59" x 70 1/2"	74"	70 1/2"	56" - 59"	-	24 1/2" - 27 1/2"	3/4"
137310	Return Panel 32"	74"	70 1/2"	-	30 1/4" - 31"	-	3/4"
137312	Return Panel 34"	74"	70 1/2"	-	32 1/4" - 33"	-	3/4"
137311	Return Panel 36"	74"	70 1/2"	-	34 1/4" - 35"	-	3/4"

Toutes ces dimensions sont approximatives. Afin d'assurer une installation parfaite, les dimensions de la structure doivent être vérifiées à partir de l'unité.

Go to Table of Contents

Mika Tub Door

Material : Tempered Glass

Features

- Raindrop 4mm tempered glass for more privacy
- Mat Silver finish
- Bathub and tub shower are sold separately, explore our wide variety of bathub and tub shower
- Bi-directional glass panels for flexible entry and easy access to fixtures on the left or right-hand side
- The EZ Kleen bottom track drains water away and significantly reduces maintenance
- Adjustment for out-of-plumb walls for easy installation
- Door made of luxurious ANSI certified tempered glass for your safety
- Proudly made in Canada
- Warranty: 10 years

MIKA 54 - 59 ½ X 55 IN. - 105409

SKU	Color	Dimensions & Weight	Packaging	MSRP
105409-965-170-000	Hammer / Matte Silver	54” - 59 1/2” x 55” / 44 lb	3.32 ft^3	$ 408

STANDARD

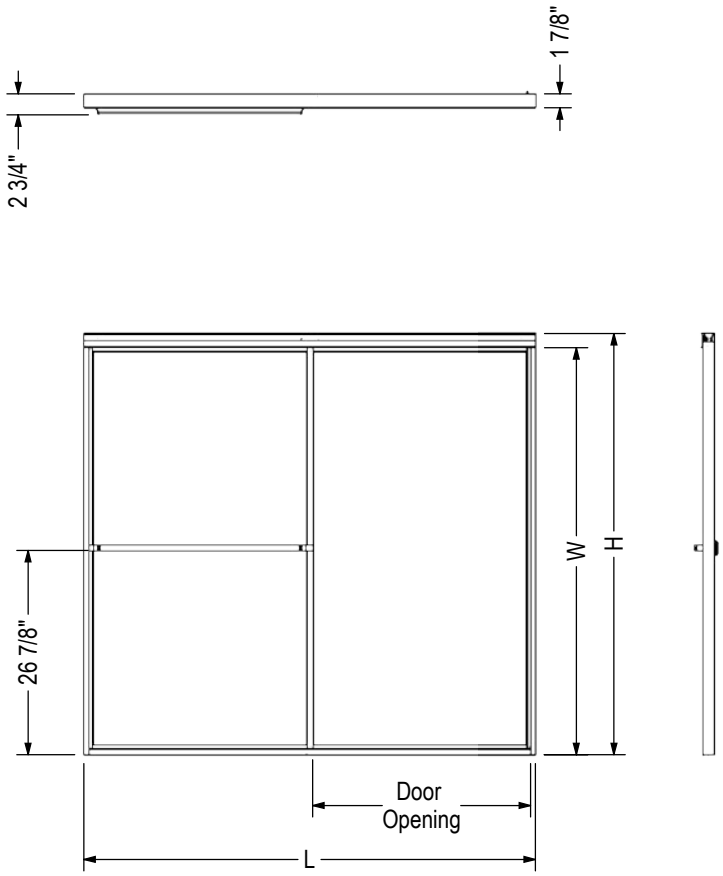

Code	Description	H	W	L Adjustable	Door opening
105409	Mika 54"-59 1/2" x 59 1/2"	55 1/2"	53 5/8"	54" - 69 1/2"	23 1/4" - 28 3/4"

All dimensions are approximate. Structure measurements must be verified against the unit to ensure proper fit.

Go to Table of Contents

Polar Tub Door

Material : Tempered Glass

Features

- Raindrop 4 mm tempered glass for more intimacy
- Chrome frame for a clean simple look
- Bathtub and tub shower are sold separately, explore our wide variety of bathtub and tub shower
- Bypass door configuration features two sliding panels
- The EZ Kleen bottom track drains water away and significantly reduces maintenance
- Reversible, allowing for left or right opening to accommodate different bathroom layouts
- Smooth sliding door functionality enhances accessibility and convenience while elevating the aesthetics of your shower space
- Proudly made in Canada
- Warranty: 10 years

POLAR 54-59 1/2 X 57 1/2 IN. - 105410

SKU	Color	Dimensions & Weight	Packaging	MSRP
105410-970-084-000	Raindrop / Chrome	55” - 59 1/2” x 57 1/2” / 50 lb	2.88 ft^3	$ 742

Revelation Round Tub Door - 6 mm

Material : Tempered Glass

Features

- - Made from high-quality 6 mm (1/4”) thick glass, ensuring durability and safety. - Reversible, allowing installation for left or right openings to accommodate different bathroom layouts. - Easy installation process saves time and hassle. -The door provides a watertight seal, ensuring no leaks or spills occur during use.

REVELATION ROUND 56-59 X 56 3/4-59 1/4 - 136692

SKU	Color	Dimensions & Weight	Packaging	MSRP
136692-900-084-000	Clear / Chrome	56” - 59” x 59.2” / 82 lb	3.65 ft^3	$ 975
136692-900-305-000	Clear / Brushed Nickel			$ 1041
136692-900-340-000	Clear / Matte Black			$ 1077

Revelation Round Tub Door - 8 mm

Material : Tempered Glass

Features

- Frameless Bypass Shower door for Alcove Installation
- Made from high-quality 8mm (5/16") thick glass, ensuring durability and safety.
- The smooth and effortless sliding mechanism allows for easy access to the shower.
- Reversible, allowing installation for left or right opening to accommodate different bathroom layouts.
- The rounded handle adds a unique touch to your bathroom, making it stand out from other shower doors.
- Wheel catcher maintains water retention
- Easy installation process saves time and hassle.
- The aluminum hardware is rust-resistant and long-lasting, ensuring the door will remain functional and beautiful for years to come.
- The clear glass allows for a bright and airy shower space, creating a refreshing and relaxing environment.

REVELATION ROUND 56-59 X 56 ¾-59 ¼ - 8 MM - 136695

SKU	Color	Dimensions & Weight	Packaging	MSRP
136695-900-084-000	Clear / Chrome	56" - 59" x 59 1/4" / 110 lb	3.2 ft^3	$ 1083
136695-900-305-000	Clear / Brushed Nickel			$ 1152
136695-900-340-000	Clear / Matte Black			$ 1185

Go to Table of Contents

STANDARD

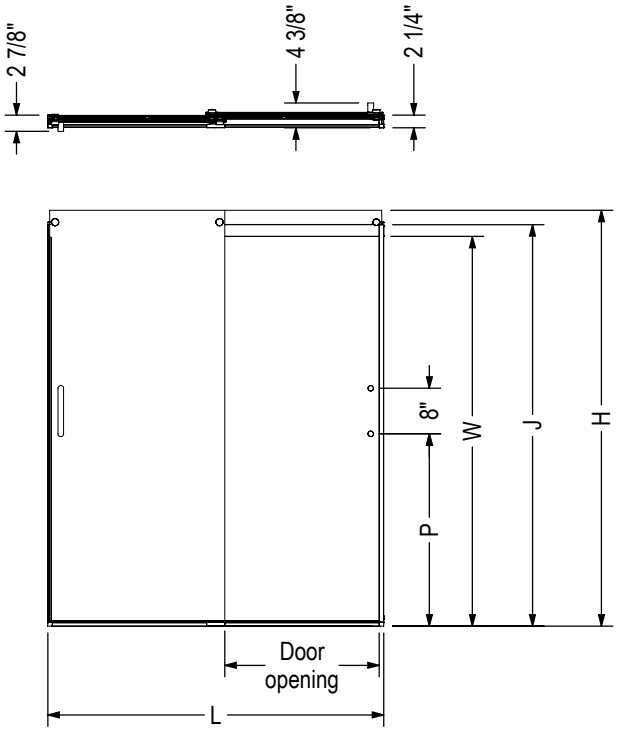

Code	Description	H	J	W	L Adjustable	Door Opening	P	Wall adjustment
139690	Revelation 6mm 70 1/2"-73" x 43 - 47"	73"	70 1/2"	68 3/8"	43" - 47"	16" - 20"	33 7/8"	1/2"
139691	Revelation 6mm 70 1/2"-73" x 55 - 59"	73"	70 1/2"	68 3/8"	55" - 59"	22" - 26"	33 7/8"	1/2"
139692	Revelation 6mm 56 3/4"-59 1/4" x 55 - 59"	59 1/4"	56 3/4"	54 5/8"	55" - 59"	22" - 26"	18 7/8"	1/2"
139693	Revelation 8mm 70 1/2"-73" x 43 - 47"	73"	70 1/2"	68 3/8"	43" - 47"	16" - 20"	33 7/8"	1/2"
139694	Revelation 8mm 70 1/2"-73" x 55 - 59"	73"	70 1/2"	68 3/8"	55" - 59"	22" - 26"	33 7/8"	1/2"
139695	Revelation 8mm 56 3/4"-59 1/4" x 55 - 59"	59 1/4"	56 3/4"	54 5/8"	55" - 59"	22" - 26"	18 7/8"	1/2"

All dimensions are approximate. Structure measurements must be verified against the unit to ensure proper fit.

Revelation Square Tub Door - 6 mm

Material : Tempered Glass

Features

- Frameless Bypass Shower door for Alcove Installation
- Made from high-quality 6 mm (1/4") thick glass, ensuring durability and safety.
- The smooth and effortless sliding mechanism allows for easy access to the shower.
- Reversible, allowing installation for left or right opening to accommodate different bathroom layouts.
- Square chrome handle and hardware for a modern and stylish appearance
- Wheel catcher maintains water retention
- Easy installation process saves time and hassle.
- The aluminum hardware is rust-resistant and long-lasting, ensuring the door will remain functional and beautiful for years to come.
- The clear glass allows for a bright and airy shower space, creating a refreshing and relaxing environment.

REVELATION SQUARE 56-59 X 56 ¾-58 ¼ - 6MM - 135692

SKU	Color	Dimensions & Weight	Packaging	MSRP
135692-900-084-000	Clear / Chrome	56" - 59" x 59 1/4" / 82 lb	3.65 ft^3	$ 975
135692-900-305-000	Clear / Brushed Nickel			$ 1041
135692-900-340-000	Clear / Matte Black			$ 1077

Go to Table of Contents

STANDARD

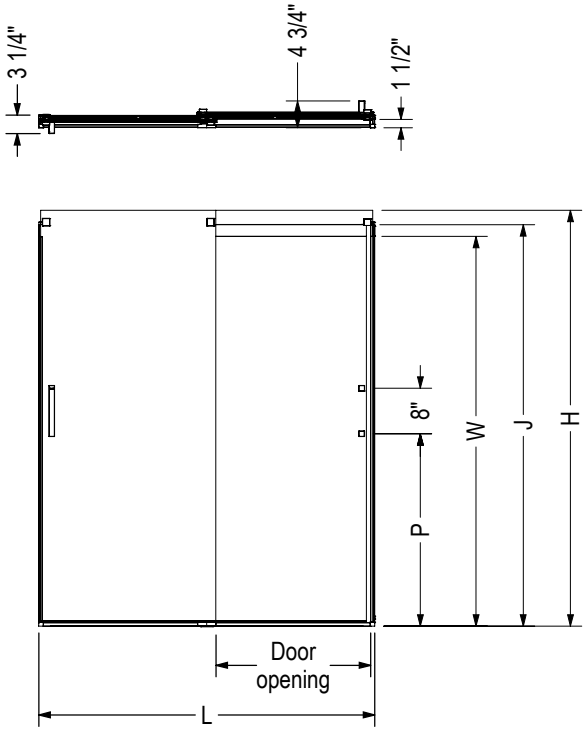

Code	Description	H	J	W	L Adjustable	Door Opening	P	Wall adjustment
134690	Revelation SQ 6mm 70 1/2"-73" x 43 - 47"	73"	70 1/2"	68 3/8"	43" - 47''	16" - 20"	33 7/8"	1/2"
134691	Revelation SQ 6mm 70 1/2"-73" x 55 - 59"	73"	70 1/2"	68 3/8"	55" - 59''	22" - 26"	33 7/8"	1/2"
134692	Revelation SQ 6mm 56 3/4"-59 1/4" x 55 - 59"	59 1/4"	56 3/4"	54 5/8"	55" - 59''	22" - 26"	18 7/8"	1/2"
134693	Revelation SQ 8mm 70 1/2"-73" x 43 - 47"	73"	70 1/2"	68 3/8"	43" - 47''	16" - 20"	33 7/8"	1/2"
134694	Revelation SQ 8mm 70 1/2"-73" x 55 - 59"	73"	70 1/2"	68 3/8"	55" - 59''	22" - 26"	33 7/8"	1/2"
134695	Revelation SQ 8mm 56 3/4"-59 1/4" x 55 - 59"	59 1/4"	56 3/4"	54 5/8"	55" - 59''	22" - 26"	18 7/8"	1/2"

All dimensions are approximate. Structure measurements must be verified against the unit to ensure proper fit.

Revelation Square Tub Door - 8 mm

Material : Tempered Glass

Features

- Frameless Bypass Shower door for Alcove Installation
- Made from high-quality 8mm (5/16") thick glass, ensuring durability and safety.
- The smooth and effortless sliding mechanism allows for easy access to the shower.
- Reversible, allowing installation for left or right opening to accommodate different bathroom layouts.
- Square chrome handle and hardware for a modern and stylish appearance
- Wheel catcher maintains water retention
- Easy installation process saves time and hassle.
- The aluminum hardware is rust-resistant and long-lasting, ensuring the door will remain functional and beautiful for years to come.
- The clear glass allows for a bright and airy shower space, creating a refreshing and relaxing environment.

REVELATION SQUARE 56-59 X 56 ¾-59 ¼ - 8MM - 135695

SKU	Color	Dimensions & Weight	Packaging	MSRP
135695-900-084-000	Clear / Chrome	56" - 59" x 59 1/4" / 110 lb	3.2 ft^3	$ 1083
135695-900-305-000	Clear / Brushed Nickel			$ 1152
135695-900-340-000	Clear / Matte Black			$ 1185

Go to Table of Contents

STANDARD

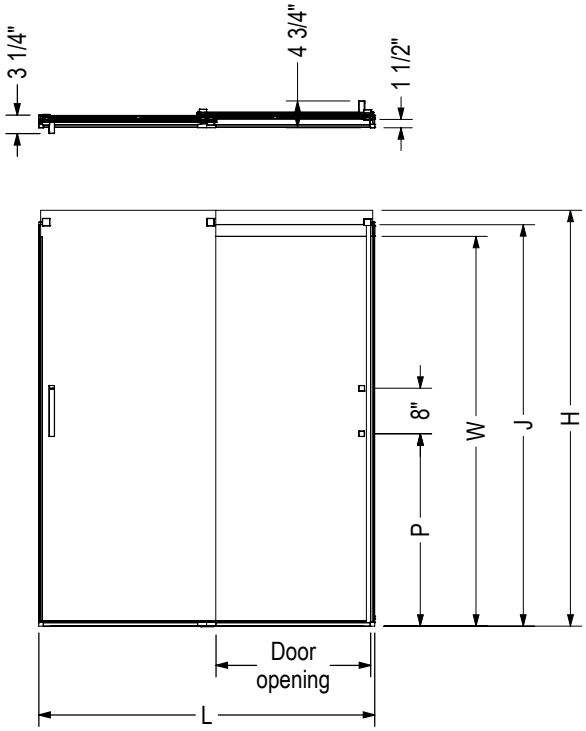

Code	Description	H	J	W	L Adjustable	Door Opening	P	Wall adjustment
134690	Revelation SQ 6mm 70 1/2"-73" x 43 - 47"	73"	70 1/2"	68 3/8"	43" - 47''	16" - 20"	33 7/8"	1/2"
134691	Revelation SQ 6mm 70 1/2"-73" x 55 - 59"	73"	70 1/2"	68 3/8"	55" - 59''	22" - 26"	33 7/8"	1/2"
134692	Revelation SQ 6mm 56 3/4"-59 1/4" x 55 - 59"	59 1/4"	56 3/4"	54 5/8"	55" - 59''	22" - 26"	18 7/8"	1/2"
134693	Revelation SQ 8mm 70 1/2"-73" x 43 - 47"	73"	70 1/2"	68 3/8"	43" - 47''	16" - 20"	33 7/8"	1/2"
134694	Revelation SQ 8mm 70 1/2"-73" x 55 - 59"	73"	70 1/2"	68 3/8"	55" - 59''	22" - 26"	33 7/8"	1/2"
134695	Revelation SQ 8mm 56 3/4"-59 1/4" x 55 - 59"	59 1/4"	56 3/4"	54 5/8"	55" - 59''	22" - 26"	18 7/8"	1/2"

All dimensions are approximate. Structure measurements must be verified against the unit to ensure proper fit.

Uptown Bypass Tub Door

Material : Tempered Glass

Features

- 8 mm (5/16”) tempered glass
- Configuration consists of 2 bidirectional glass panels for flexible entry and easy access to fixtures on the left or right-hand side
- Available in 3 stylish finishes
- Innovative Soft Close™ by MAAX technology prevents slamming
- Glass panels come with the Lotus Easy Clean Glass Protection™ to repel soap and water stains for carefree maintenance
- Fits on showers, walls and tile
- Reversible panel for easy corner installation on the left or on the right
- 3/8” out-of-plumb adjustment
- DIY Product for an easy installation

UPTOWN 56-59 X 58 IN. 8 MM - 135320

SKU	Color	Dimensions & Weight	Packaging	MSRP
135320-900-084-000	Clear / Chrome	56” - 59” x 58” / 106 lb	4.82 ft^3	$ 1466
135320-900-305-000	Clear / Brushed Nickel			$ 1540
135320-900-340-000	Clear / Matte Black			$ 1576

Go to Table of Contents

STANDARD

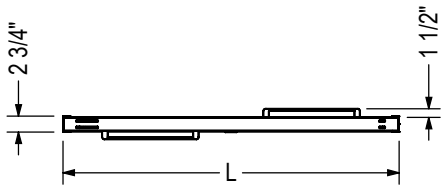

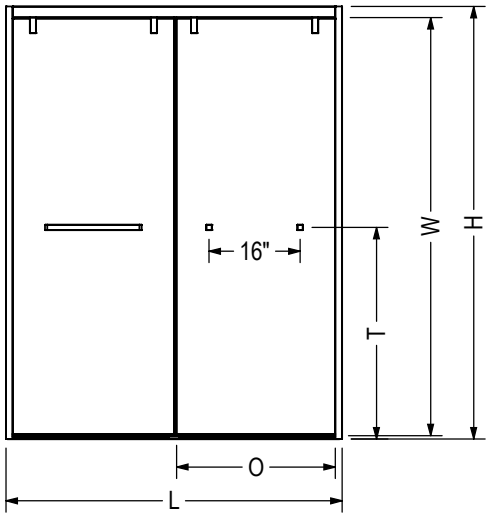

Code	Description	H	L	O	T	W
135320	Uptown Bypass Tub door 58" x 56" - 59"	58"	56" - 59"	24 7/8" - 27 7/8"	28 1/4"	55 1/2"
135321	Uptown Bypass door 76" x 44" - 47"	76"	44" - 47"	18 7/8" - 21 7/8"	37 1/8"	73 1/2"
135322	Uptown Bypass door 76" x 56" - 59"	76"	56" - 59"	24 7/8" - 27 7/8"	37 1/8"	73 1/2"

Wall adjusment = 3/8"

All dimensions are approximate. Structure measurements must be verified against the unit to ensure proper fit.

Vanities

Vanuria white 72" vanity — with gray quartz and matte black hardware

Azaria 30 in. Vanity

Features

- Single rectangular integral sink in white ceramic for a seamless, easy-to-clean surface
- The back of the counter is equipped with a sloped edge for better protection against water damage
- Finished in a rich warm oak tone, adding depth and natural character while creating a cozy, inviting feel that pairs beautifully with both classic and contemporary interiors
- Enjoy smooth, quiet closing on both doors with our soft-close system plus, the adjustable hinges prevent slamming
- Equipped with adjustable feet to ensure a perfectly leveled installation
- Available with a matching mirror of 19.7 L in. x 27.6 H in. to perfectly coordinate with your vanity and complete the look of your bathroom
- Ships in multiple boxes as a ready-to-assemble knockdown vanity for easy handling and transport
- All hardware and components are included and identified — requires only standard tools, perfect for DIY installation
- Features a stylish slatted front design, adding texture and visual interest to the overall look

AZARIA 30 IN. VANITY - 108266

SKU	Vanity Top Color	Vanity Base Color	Hardware Finish	Dimensions & Weight	Packaging	MSRP
108266-000-334-000	White	Warm Oak		31 7/8” x 18 1/8” x 33 1/2” / 85 lb	27 ft^3	$ 655
108266-000-334-100				31 7/8” x 18 1/8” x 33 1/2” / 93 lb		$ 788

① Diameter drain hole: 47mm / 1,875 po

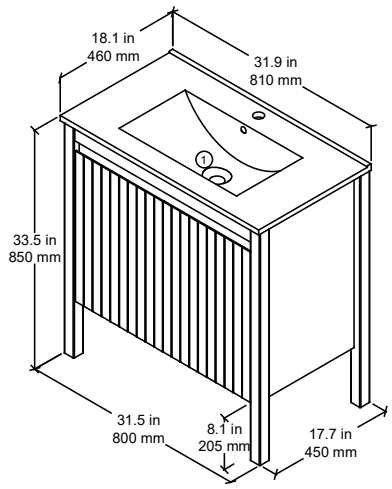

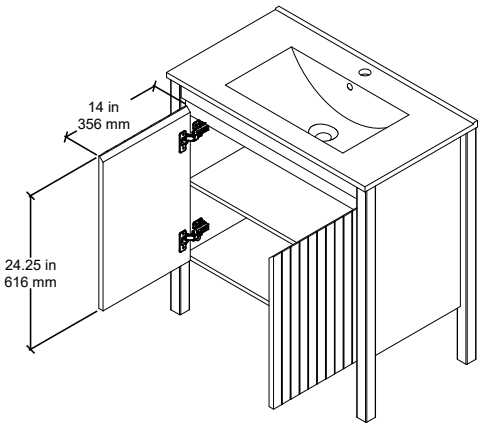

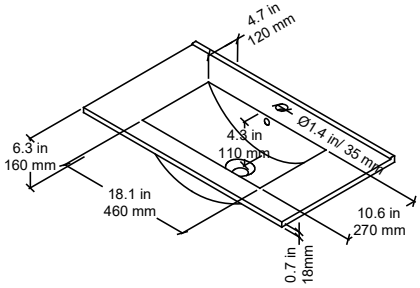

Optional mirror

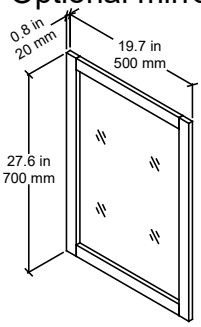

Dimensions must be verified against the unit to ensure proper fit.

Celestine 30 in. Vanity

Features

- Single rectangular integral sink in white ceramic for a seamless, easy-to-clean surface
- The back of the counter is equipped with a sloped edge for better protection against water damage
- Finished in a black oak tone, delivering a bold, sophisticated look with wood character that adds depth to any space
- Enjoy smooth, quiet closing on the drawer with our soft-close system plus, the full extending drawer sliders prevent slamming
- Equipped with adjustable feet to ensure a perfectly leveled installation
- Available with a matching mirror of 19.7 L in. x 27.6 H in. to perfectly coordinate with your vanity and complete the look of your bathroom
- Ships in multiple boxes as a ready-to-assemble knockdown vanity for easy handling and transport
- All hardware and components are included and identified — requires only standard tools, perfect for DIY installation
- Features a sleek, contemporary design with clean lines, a deep wood finish, and a practical storage appeal

CELESTINE 30 IN. VANITY - 108267

SKU	Vanity Top Color	Vanity Base Color	Hardware Finish	Dimensions & Weight	Packaging	MSRP
108267-000-335-000	White	Black Oak		31 7/8” x 18 1/8” x 33 1/2” / 82 lb	27 ft^3	$ 736
108267-000-335-100				31 7/8” x 18 1/8” x 33 1/2” / 91 lb		$ 867

① Shelf space: 14 cm / 5.5 in

② Drawer space: 67.8 x 33.4 x 25.5 cm / 26.7 x 13.1 x 10 in

③ Diameter drain hole: 47mm / 1,875 po

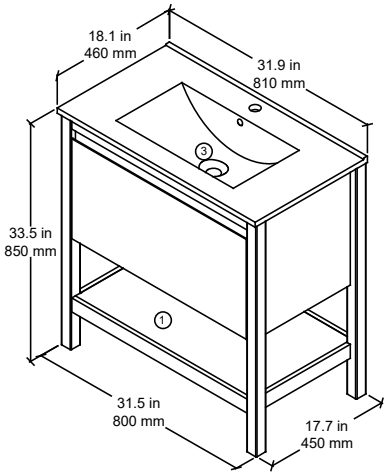

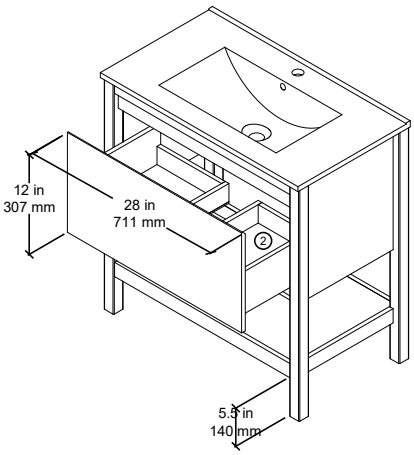

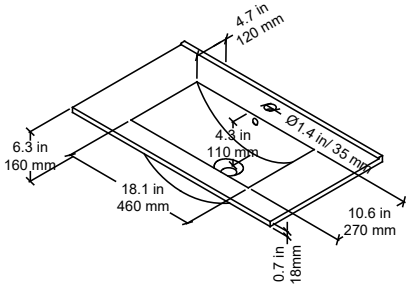

Optional mirror

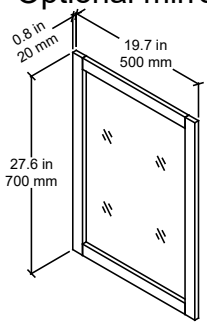

Dimensions must be verified against the unit to ensure proper fit.

Opaline 30 in. Vanity

Features

- Single rectangular integral sink in white ceramic for a seamless, easy-to-clean surface
- The back of the counter is equipped with a sloped edge for better protection against water damage
- Two handles options are included in the vanity
- Enjoy smooth, quiet closing on all drawers with our soft-close system plus, the full extending drawer sliders prevent slamming
- Equipped with adjustable feet to ensure a perfectly leveled installation
- Available with a matching mirror of 19.7 L in. x 27.6 H in. to perfectly coordinate with your vanity and complete the look of your bathroom
- Ships in multiple boxes as a ready-to-assemble knockdown vanity for easy handling and transport
- All hardware and components are included and identified — requires only standard tools, perfect for DIY installation

OPALINE 30 IN. VANITY - 108264

SKU	Vanity Top Color	Vanity Base Color	Hardware Finish	Dimensions & Weight	Packaging	MSRP
108264-000-308-000	White	White		31 7/8” x 18 1/8” x 33 1/2” / 60 lb	27 ft^3	$ 895
108264-000-308-100				31 7/8” x 18 1/8” x 33 1/2” / 71 lb		$ 1028
108264-000-311-000		Light Oak		31 7/8” x 18 1/8” x 33 1/2” / 60 lb		$ 895
108264-000-311-100				31 7/8” x 18 1/8” x 33 1/2” / 71 lb		$ 1028
108264-000-333-000		Matte Black		31 7/8” x 18 1/8” x 33 1/2” / 60 lb		$ 895
108264-000-333-100				31 7/8” x 18 1/8” x 33 1/2” / 71 lb		$ 1028

① Top drawer space: 67.8 x 33.4 x 19.5 cm / 26.7 x 13.1x7.7 in

② Bottom drawer space: 67.8 x 33.4 x 22 cm / 26.7 x 13.1 x 8.7 in

③ Diameter drain hole: 47mm / 1,875 po

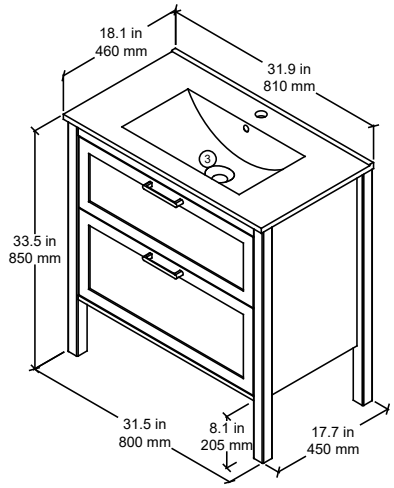

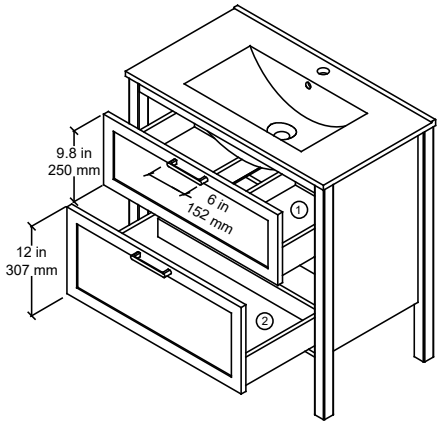

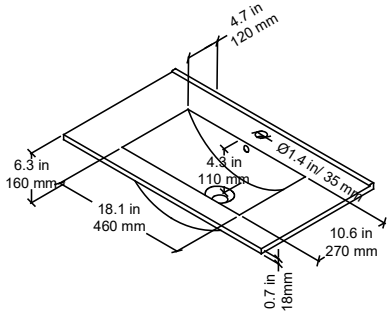

Optional mirror

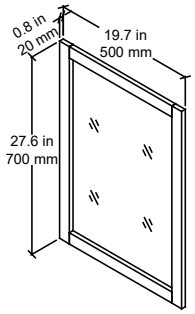

Dimensions must be verified against the unit to ensure proper fit.

Opaline 48 in. Vanity

Features

- Double rectangular integral sinks in white ceramic for a seamless, easy-to-clean surface
- The back of the counter is equipped with a sloped edge for better protection against water damage
- Two handles options are included in the vanity
- Enjoy smooth, quiet closing on all drawers with our soft-close system plus, the full extending drawer sliders prevent slamming
- Equipped with adjustable feet to ensure a perfectly leveled installation
- Available with two matching mirrors of 19.7 L in. x 27.6 H in. to perfectly coordinate with your vanity and complete the look of your bathroom
- Ships in multiple boxes as a ready-to-assemble knockdown vanity for easy handling and transport
- All hardware and components are included and identified — requires only standard tools, perfect for DIY installation

OPALINE 48 IN. VANITY - 108265

SKU	Vanity Top Color	Vanity Base Color	Hardware Finish	Dimensions & Weight	Packaging	MSRP
108265-000-308-000	White	White		47 5/8” x 18 1/8” x 33 1/2” / 120 lb	28.69 ft^3	$ 1337
108265-000-308-101				47 5/8” x 18 1/8” x 33 1/2” / 142 lb		$ 1603
108265-000-311-000		Light Oak		47 5/8” x 18 1/8” x 33 1/2” / 120 lb		$ 1337
108265-000-311-101				47 5/8” x 18 1/8” x 33 1/2” / 142 lb		$ 1603
108265-000-333-000		Matte Black		47 5/8” x 18 1/8” x 33 1/2” / 120 lb		$ 1337
108265-000-333-101				47 5/8” x 18 1/8” x 33 1/2” / 142 lb		$ 1603

① Top drawer space: 510 x 33.4 x 19.5 cm / 20 x 13.1 x 7.7 in

② Bottom drawer space: 510 x 33.4 x 21.5 cm / 20 x 13.1 x 8.5 in

③ Diameter drain hole: 47mm / 1,875 po

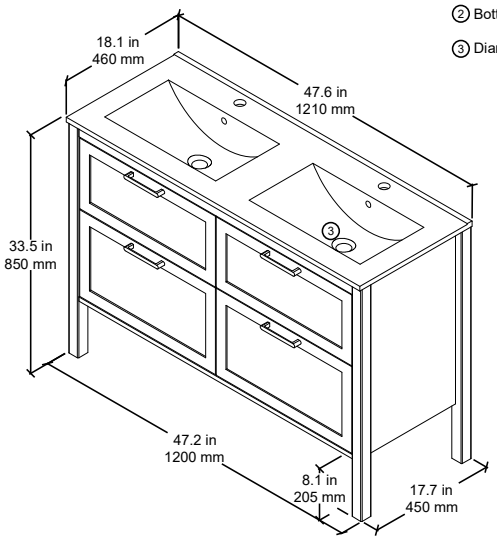

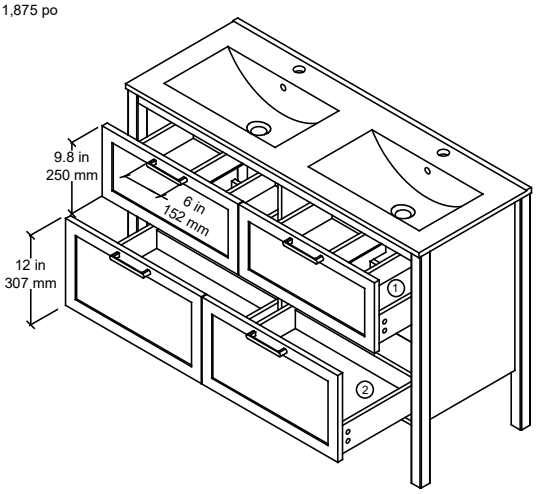

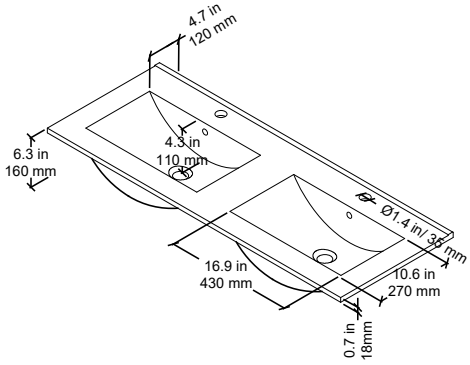

Optional mirrors (2)

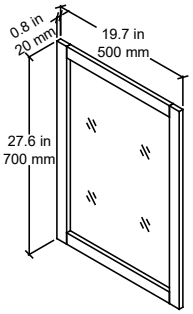

Dimensions must be verified against the unit to ensure proper fit.

Go to Table of Contents

Urba 36 in. Vanity

Features

- Pre-Drilled for 8 in. widespread faucet: Conveniently prepared for easy installation and a perfect fit
- Sealed with a protective lacquer for moisture resistance, ensuring a long-lasting finish
- Solid Oak Frame: Expertly crafted for durability, stability, and timeless appeal
- Soft-Close System: Enjoy smooth, quiet closing on the doors for added convenience and luxury
- 4” matching backsplash included but not pre-installed, allowing for flexible customization
- Sink with built-in overflow designed to manage water levels and reduce the risk of spills
- Drawers with mortise and tenon joints

URBA 36 IN. VANITY - 107766

SKU	Vanity Top Color	Vanity Base Color	Hardware Finish	Dimensions & Weight	Packaging	MSRP
107766-303-308-305	White Carrara	White		36” x 22” x 33 3/4” / 230 lb	68 ft³	$ 3002
107766-303-308-340						$ 2913
107766-303-308-343						$ 3002
107766-303-312-305		Navy				$ 3002
107766-303-312-343						$ 2913
107766-304-308-305	White	White				$ 3002
107766-304-308-340						$ 2913
107766-304-308-343						$ 3002
107766-304-312-305		Navy				$ 3002
107766-304-312-343						$ 2913

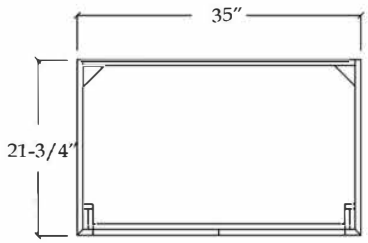

TOP VIEW

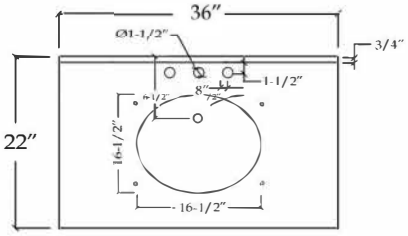

COUNTER-TOP

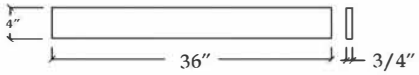

BACK SPLASH

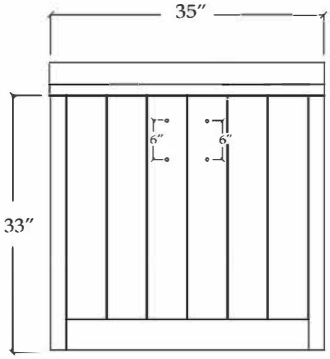

FRONT VIEW

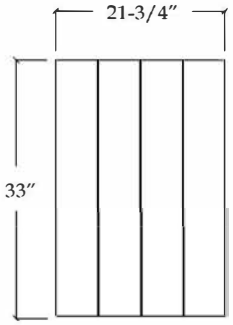

SIDE VIEW

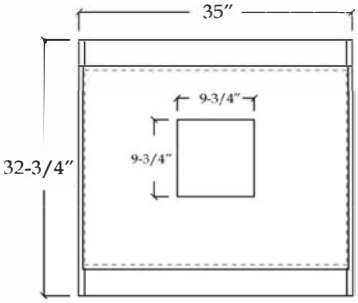

BACK VIEW

Measurements must be verified against the unit to ensure proper fit. Specifications are subject to change without notice.

Urba 48 in. Vanity

Features

- Pre-Drilled for 8 in. widespread faucet: Conveniently prepared for easy installation and a perfect fit
- Sealed with a protective lacquer for moisture resistance, ensuring a long-lasting finish
- Solid Oak Frame: Expertly crafted for durability, stability, and timeless appeal
- Soft-Close System: Enjoy smooth, quiet closing on all drawers and door for added convenience and luxury
- 4” matching backsplash included but not pre-installed, allowing for flexible customization
- Sink with built-in overflow designed to manage water levels and reduce the risk of spills
- Drawers with mortise and tenon joints

URBA 48 IN. VANITY - 107767

SKU	Vanity Top Color	Vanity Base Color	Hardware Finish	Dimensions & Weight	Packaging	MSRP
107767-303-308-305	White Carrara	White		48” x 22” x 33 3/4” / 265 lb	72.25 ft³	$ 3492
107767-303-308-340						$ 3390
107767-303-308-343						$ 3492
107767-303-312-305		Navy				$ 3492
107767-303-312-343						$ 3390
107767-304-308-305	White	White				$ 3492
107767-304-308-340						$ 3390
107767-304-308-343						$ 3492
107767-304-312-305		Navy				$ 3492
107767-304-312-343						$ 3390

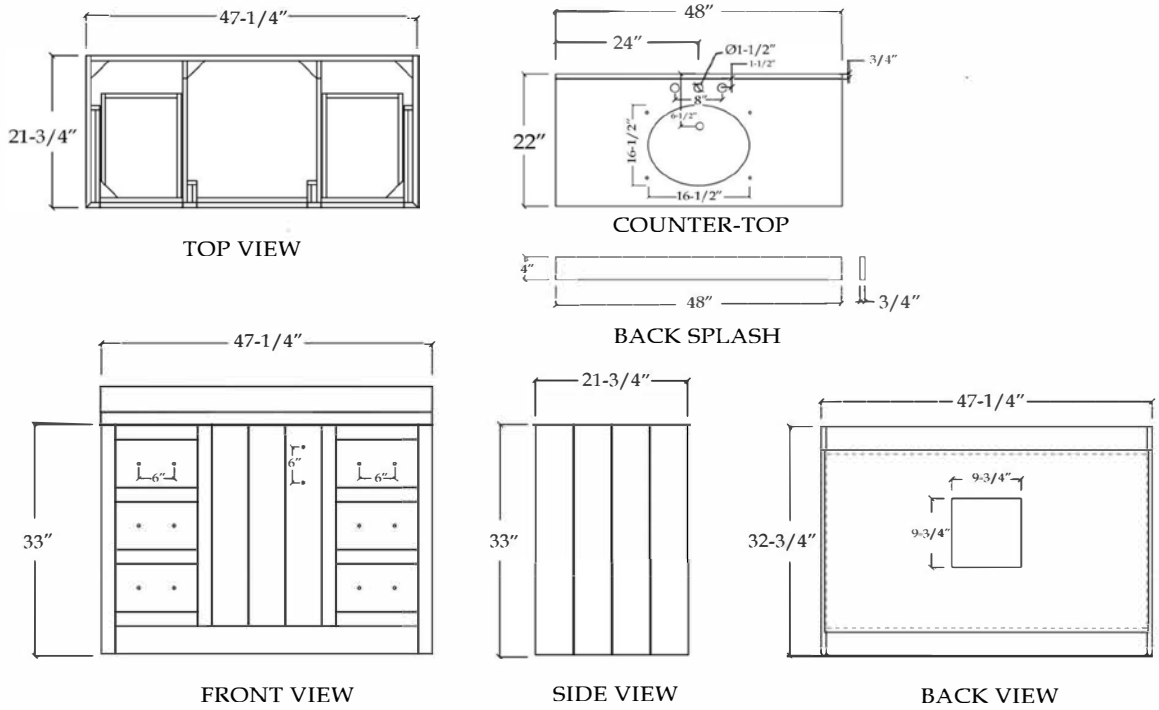

Measurements must be verified against the unit to ensure proper fit. Specifications are subject to change without notice.

Vanuria 30 in. Vanity

Features

- Chic transitional design, a perfect blend of classic elegance and modern sophistication, making it the perfect addition to your bathroom
- Features a single rectangular undermount ceramic sink
- The solid oak frame is expertly crafted for durability, stability, and timeless appeal
- Sealed with a protective lacquer for moisture resistance, ensuring a long-lasting finish
- 4 in. matching backsplash is included but not pre-installed, allowing for flexible customization
- Pre-Drilled for 8 in. widespread faucet: Conveniently prepared for easy installation and a perfect fit
- Sink with built-in overflow designed to manage water levels and reduce the risk of spills
- Soft-Close System: Enjoy smooth, quiet closing on all drawers and door for added convenience and luxury

VANURIA 30 IN. VANITY - 107763

SKU	Vanity Top Color	Vanity Base Color	Hardware Finish	Dimensions & Weight	Packaging	MSRP
107763-303-308-305	White Carrara	White		30” x 22” x 33 3/8” / 177 lb	68 ft³	$ 2615
107763-303-308-340						$ 2693
107763-303-308-343						$ 2693
107763-303-309-305		Light Grey				$ 2615
107763-303-309-340						$ 2693
107763-303-309-343						$ 2693
107763-306-308-305	Grey	White				$ 2615
107763-306-308-340						$ 2693
107763-306-308-343						$ 2693
107763-306-309-305		Light Grey				$ 2615
107763-306-309-340						$ 2693
107763-306-309-343						$ 2693

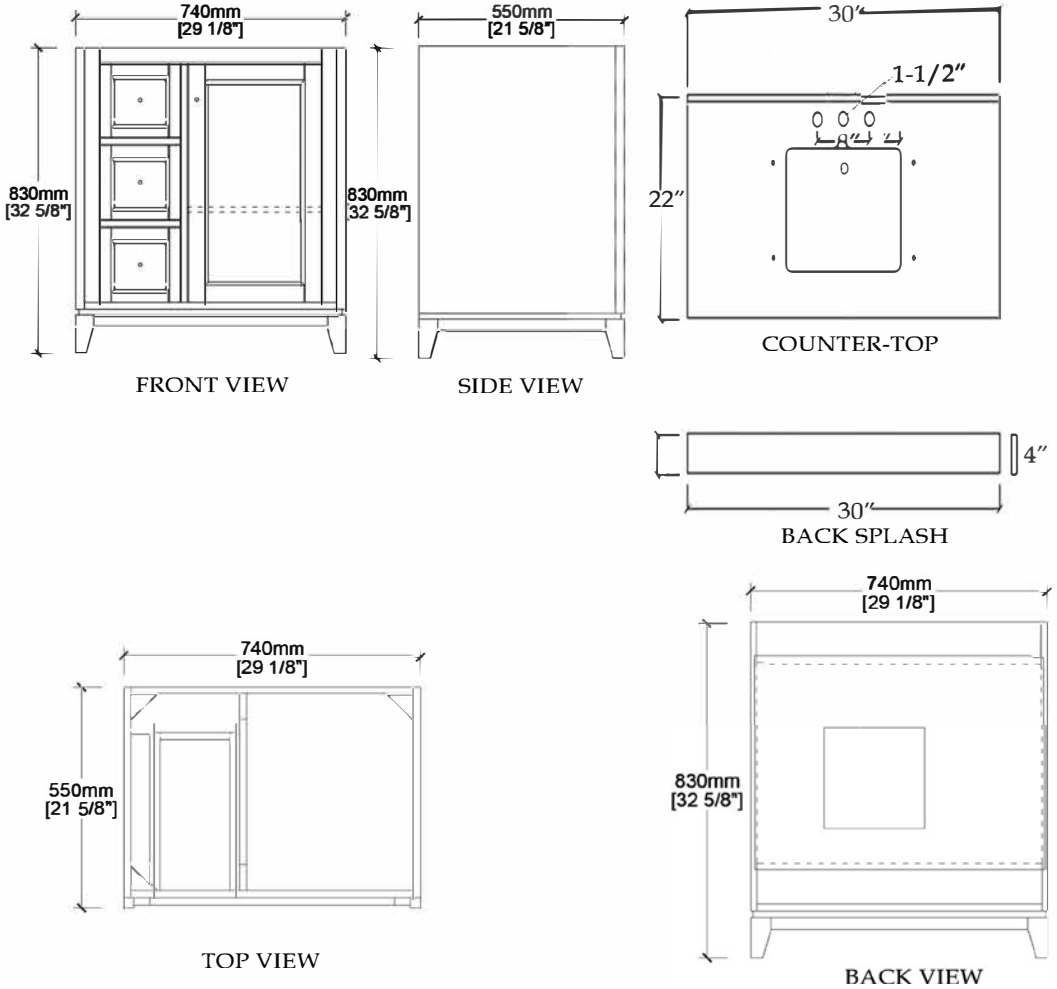

Measurements must be verified against the unit to ensure proper fit. Specifications are subject to change without notice.

Vanuria 48 in. Vanity

Features

- Chic transitional design, a perfect blend of classic elegance and modern sophistication, making it the perfect addition to your bathroom
- Features a single rectangular undermount ceramic sink
- The solid oak frame is expertly crafted for durability, stability, and timeless appeal
- Sealed with a protective lacquer for moisture resistance, ensuring a long-lasting finish
- 4 in. matching backsplash is included but not pre-installed, allowing for flexible customization
- Pre-Drilled for 8 in. widespread faucet: Conveniently prepared for easy installation and a perfect fit
- Sink with built-in overflow designed to manage water levels and reduce the risk of spills
- Soft-Close System: Enjoy smooth, quiet closing on all drawers and doors for added convenience and luxury

VANURIA 48 IN. VANITY - 107764

SKU	Vanity Top Color	Vanity Base Color	Hardware Finish	Dimensions & Weight	Packaging	MSRP
107764-303-308-305	White Carrara	White		48” x 22” x 33 3/8” / 239 lb	72.25 ft³	$ 3684
107764-303-308-340						$ 3795
107764-303-308-343						$ 3795
107764-303-309-305		Light Grey				$ 3684
107764-303-309-340						$ 3795
107764-303-309-343						$ 3795
107764-306-308-305	Grey	White				$ 3684
107764-306-308-340						$ 3795
107764-306-308-343						$ 3795
107764-306-309-305		Light Grey				$ 3684
107764-306-309-340						$ 3795
107764-306-309-343						$ 3795

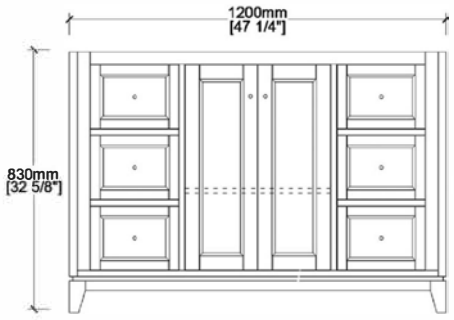

FRONT VIEW

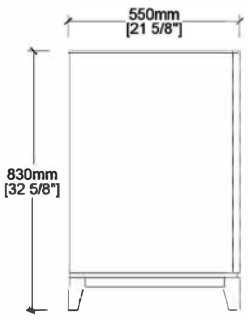

SIDE VIEW

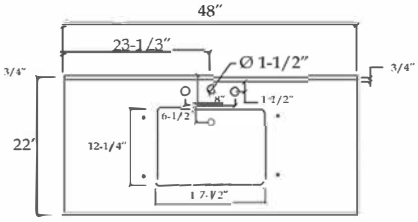

COUNTER-TOP

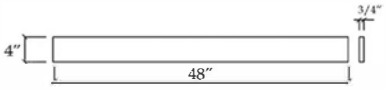

BACK SPLASH

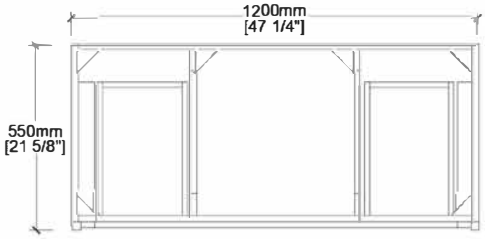

TOP VIEW

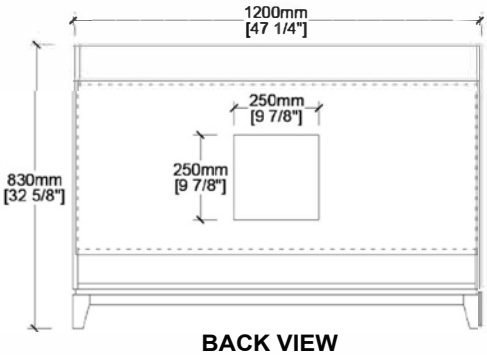

BACK VIEW

Measurements must be verified against the unit to ensure proper fit. Specifications are subject to change without notice.

Vanuria 72 in. Vanity

Features

- Chic transitional design, a perfect blend of classic elegance and modern sophistication, making it the perfect addition to your bathroom
- Features a double rectangular undermount ceramic sinks
- The solid oak frame is expertly crafted for durability, stability, and timeless appeal
- Sealed with a protective lacquer for moisture resistance, ensuring a long-lasting finish
- 4 in. matching backsplash is included but not pre-installed, allowing for flexible customization
- Pre-Drilled for 8 in. widespread faucet: Conveniently prepared for easy installation and a perfect fit
- Sinks with built-in overflow designed to manage water levels and reduce the risk of spills
- Soft-Close System: Enjoy smooth, quiet closing on all drawers and doors for added convenience and luxury

VANURIA 72 IN. VANITY - 107765

SKU	Vanity Top Color	Vanity Base Color	Hardware Finish	Dimensions & Weight	Packaging	MSRP
107765-303-308-305	White Carrara	White		72” x 22” x 33 3/8” / 310 lb	76.27 ft³	$ 5054
107765-303-308-340						$ 5205
107765-303-308-343						$ 5205
107765-303-309-305		Light Grey				$ 5054
107765-303-309-340						$ 5205
107765-303-309-343						$ 5205
107765-306-308-305	Grey	White				$ 5054
107765-306-308-340						$ 5205
107765-306-308-343						$ 5205
107765-306-309-305		Light Grey				$ 5054
107765-306-309-340						$ 5205
107765-306-309-343						$ 5205

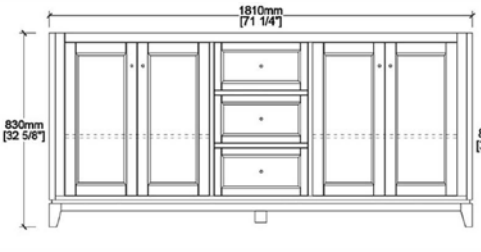

FRONT VIEW

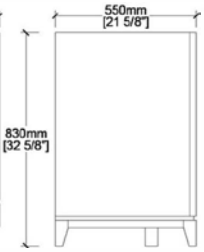

SIDE VIEW

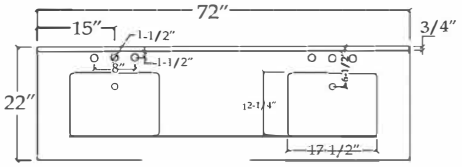

COUNTER-TOP

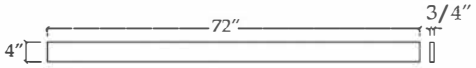

BACK SPLASH

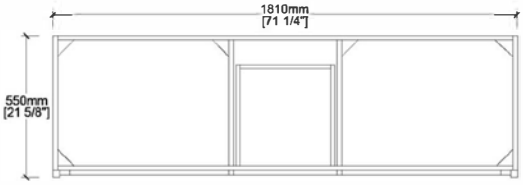

TOP VIEW

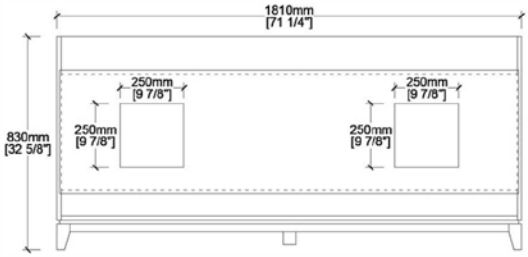

BACK VIEW

Measurements must be verified against the unit to ensure proper fit. Specifications are subject to change without notice.

Go to Table of Contents

Zidea 48 in. Vanity

Features

- Luxiourious modern design the perfect addition to your bathroom
- Feature a single integral sink
- Solid Oak Frame: Expertly crafted for durability, stability, and timeless appeal
- Sealed with a protective lacquer for moisture resistance, ensuring a long-lasting finish
- No backsplash, ideal for pairing with your favorite tile for a personalized look
- Pre-Drilled Single Faucet Hole: Conveniently prepared for easy installation and a perfect fit.
- Hardware Finish: Brushed Gold
- Easy access to plumbing for quick installation and maintenance
- Soft-Close System: Enjoy smooth, quiet closing on all drawers and doors for added convenience and luxury

ZIDEA 48 IN. VANITY - 107768

SKU	Vanity Top Color	Vanity Base Color	Hardware Finish	Dimensions & Weight	Packaging	MSRP
107768-307-308-343	White	White		48” x 18 7/8” x 19 1/2” / 285 lb	46.75 ft^3	$ 3026

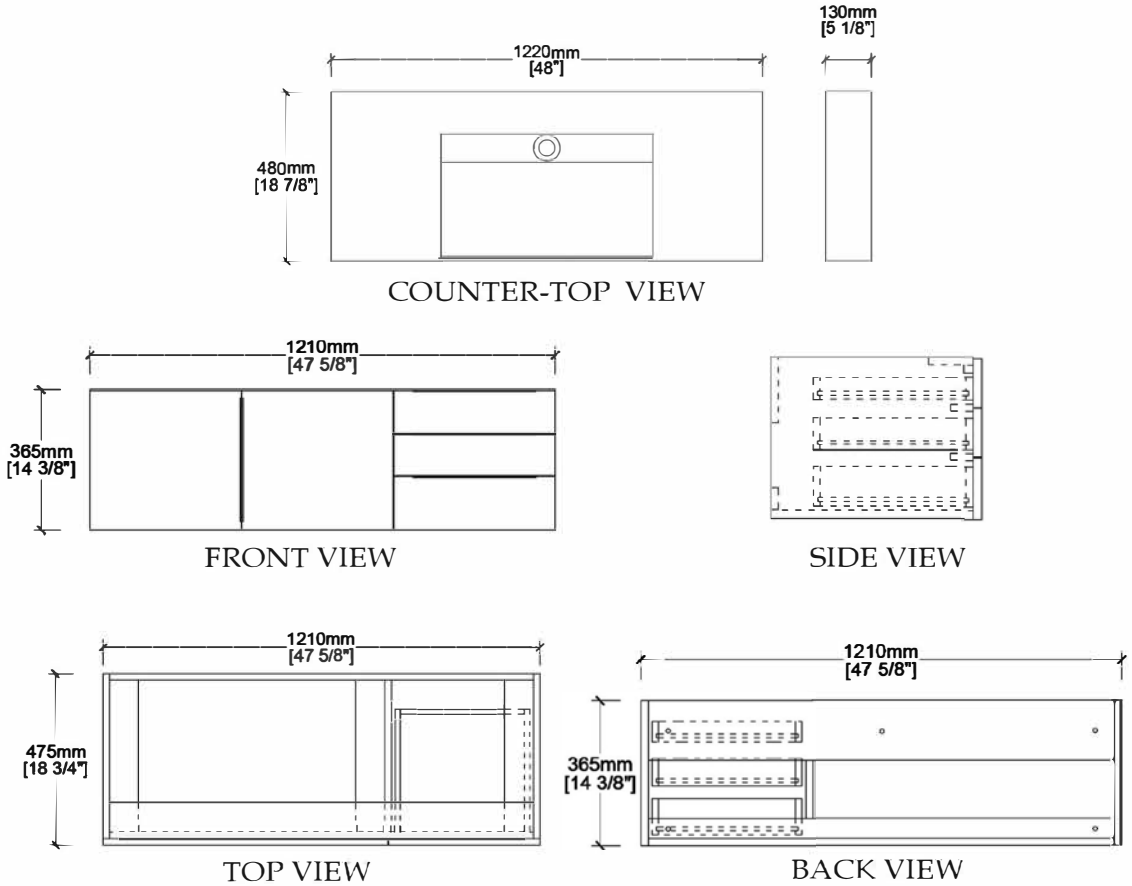

Measurements must be verified against the unit to ensure proper fit. Specifications are subject to change without notice.

Zidea 60 in. Vanity

Features

- Luxiourious modern design the perfect addition to your bathroom
- Feature two integral sink
- Solid Oak Frame: Expertly crafted for durability, stability, and timeless appeal
- Sealed with a protective lacquer for moisture resistance, ensuring a long-lasting finish
- No backsplash, ideal for pairing with your favorite tile for a personalized look
- Pre-Drilled Single Faucet Hole: Conveniently prepared for easy installation and a perfect fit.
- Hardware Finish: Brushed Gold
- Easy access to plumbing for quick installation and maintenance
- Soft-Close System: Enjoy smooth, quiet closing on all drawers and doors for added convenience and luxury

ZIDEA 60 IN. VANITY - 107769

SKU	Vanity Top Color	Vanity Base Color	Hardware Finish	Dimensions & Weight	Packaging	MSRP
107769-307-308-343	White	White		60” x 18 7/8” x 19 1/2” / 310 lb	39.12 ft^3	$ 3797

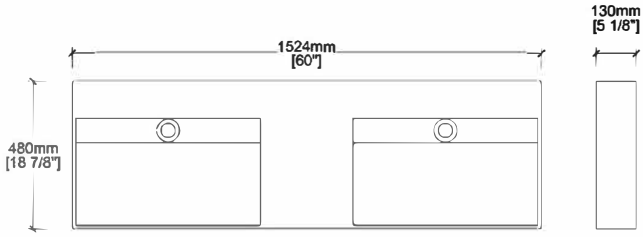

COUNTER-TOP VIEW

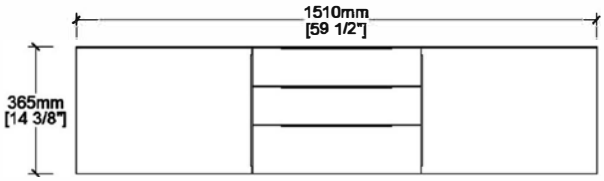

FRONT VIEW

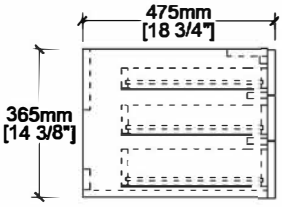

SIDE VIEW

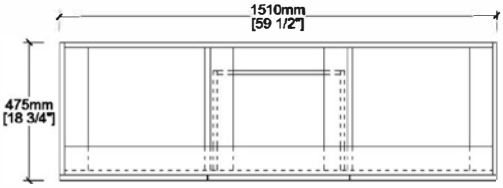

TOP VIEW

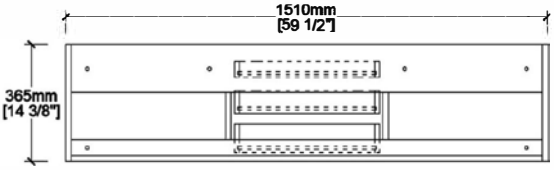

BACK VIEW

Measurements must be verified against the unit to ensure proper fit. Specifications are subject to change without notice.

Accessories

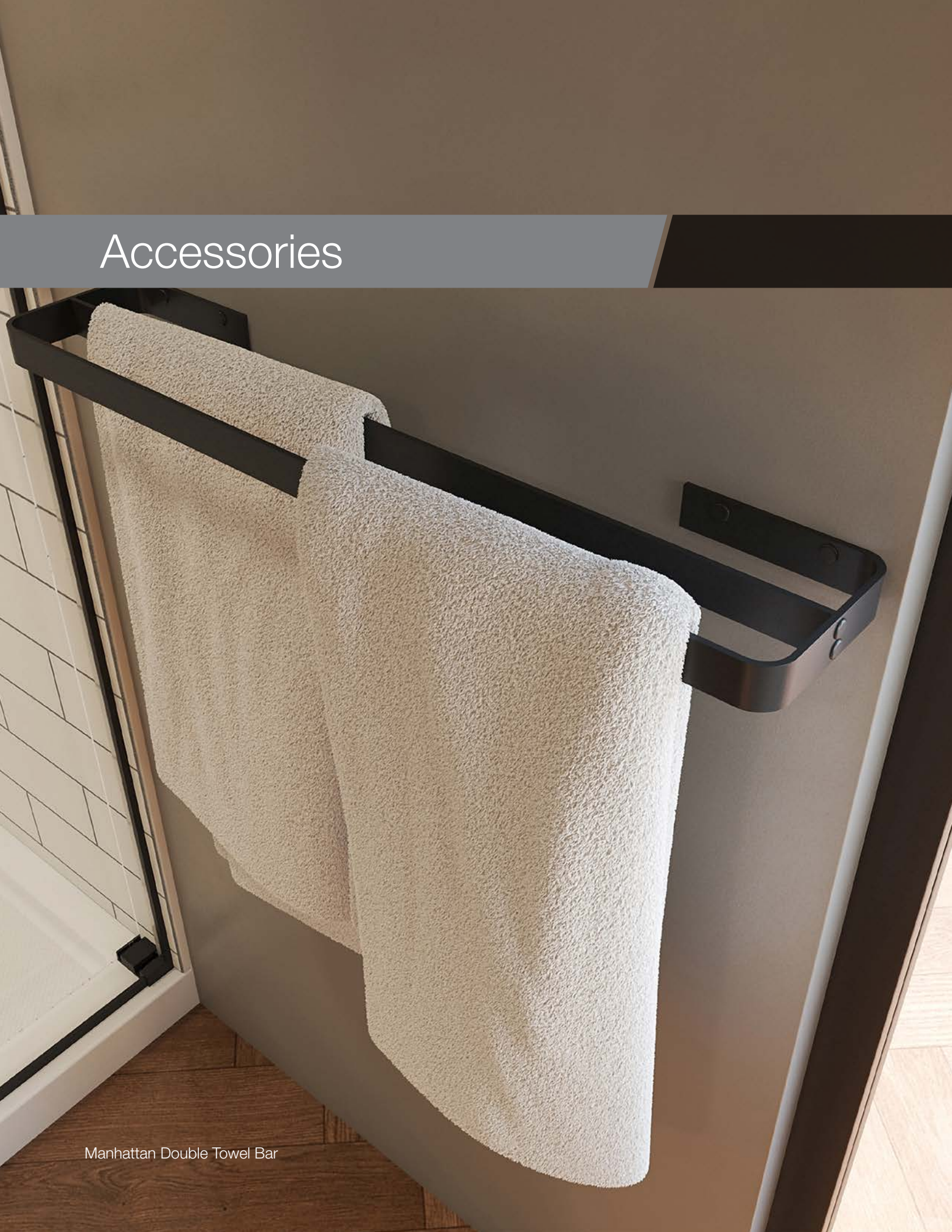

Manhattan Double Towel Bar

Manhattan Corner Shelf with Glass

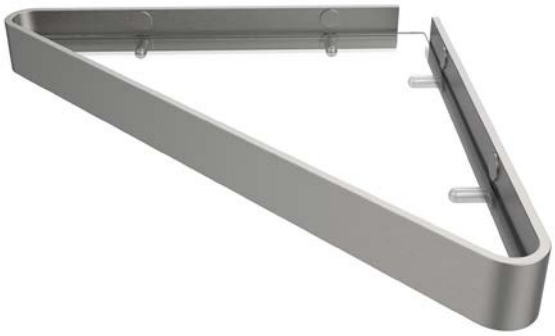

Material : Aluminum

Features

- Triangular Corner Shelf for stylish and space-saving storage
- Made of durable tempered glass and aluminum for long-lasting use
- Necessary hardware included for easy installation (4 screws, 4 caps)
- Can be installed to any bathroom wall including tile, Utile, drywall, acrylic and cultured marble
- Built-in ledge to prevent products from falling off without adding bulkiness to your design
- Can hold up to 150 lbs (68 kg) of weight
- Open channel between glass and raised edge prevents water accumulation and keeps your bath essentials dry
- Get the suite look and coordinate with other accessories from the Manhattan collection
- Designed in North America

MANHATTAN CORNER SHELF WITH GLASS - 10042818

SKU	Color	Dimensions & Weight	Packaging	MSRP
10042818-201	Brushed Chrome	9 5/8” x 9 5/8” x 1 1/8” / 1.67 lb	09 ft^3	$ 157
10042818-276	Glossy White			$ 157
10042818-340	Matte Black			$ 157
10042818-343	Brushed Gold			$ 157

STANDARD

All dimensions are approximate. Structure measurements must be verified against the unit to ensure proper fit.

Toutes ces dimensions sont approximatives. Afin d'assurer une installation parfaite, les dimensions de la structure doivent être vérifiées à partir de l'unité.

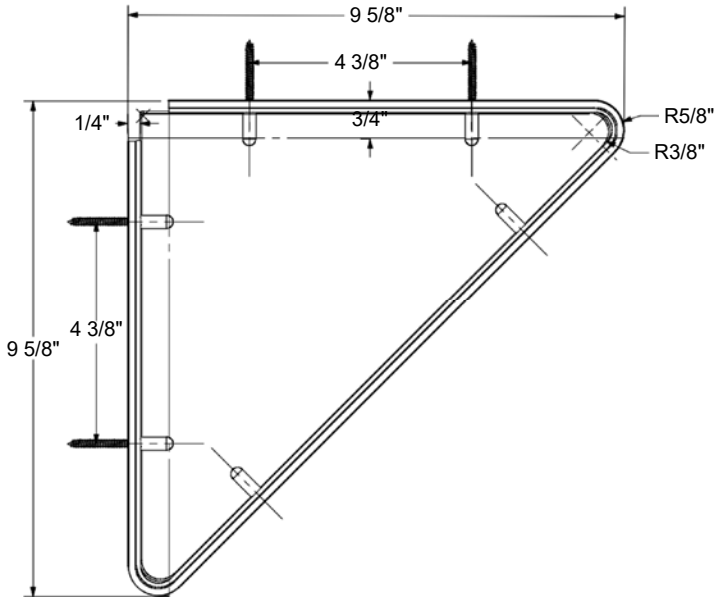

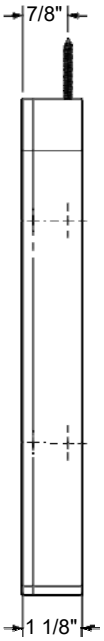

Vue iso pleine grandeur (maximiser l'espace)
Iso View full length (maximize the space)

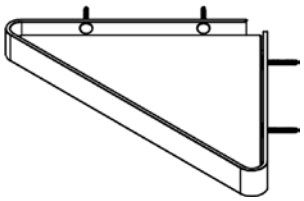

Manhattan Long Shelf

Material : Stainless Steel

Features

- Made of durable Stainless Steel
- Necessary hardware included for easy installation
- Screw caps can be used as hooks to increase storage options
- Perfect length allowing water to overflow at each extremity to keep all shower essentials dry
- Advantageous lenght which maximizes available storage
- Rust resistant for long lasting use
- No cutting required to facilitate your installation experience
- Can be installed to any bathroom wall including tile, drywall, acrylic and cultured marble

MANHATTAN 45 IN. LONG SHELF - 107654

SKU	Color	Dimensions & Weight	Packaging	MSRP
107654-000-278-000	Matte White	45” x 3” x 1 3/8” / 4.17 lb	0.42 ft^3	$ 190
107654-000-340-000	Matte Black			$ 190

MANHATTAN 57 IN. LONG SHELF - 107655

SKU	Color	Dimensions & Weight	Packaging	MSRP
107655-000-278-000	Matte White	57” x 3” x 1 3/8” / 4.74 lb	0.53 ft^3	$ 203
107655-000-340-000	Matte Black			$ 238

STANDARD

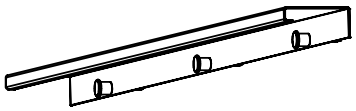

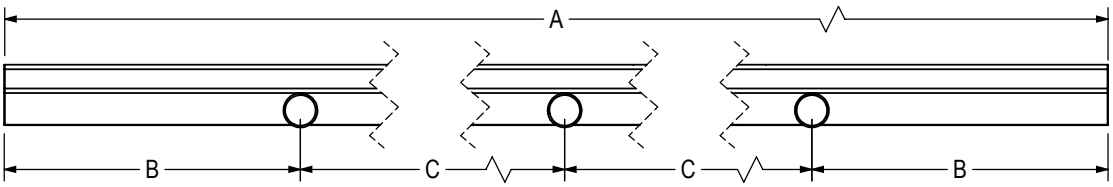

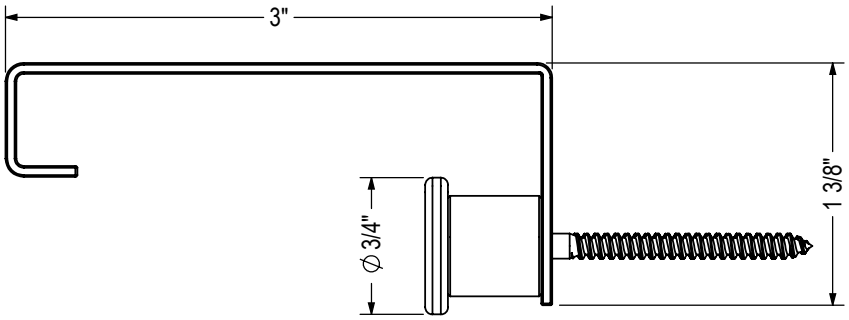

Description	A	B	C
Long shelf 45"	45"	6 1/2"	16"
Long shelf 57"	57"	4 1/2"	16"

All dimensions are approximate. Structure measurements must be verified against the unit to ensure proper fit.

Manhattan Rectangular Shelf with Glass

Material : Aluminum

Features

- Rectangular shelf for stylish and space-saving storage
- Made of durable tempered glass and aluminum for long-lasting use
- Necessary hardware included for easy installation (4 screws, 4 caps)
- Can be installed to any bathroom wall including tile, Utile, drywall, acrylic and cultured marble
- Built-in ledge to prevent products from falling off without adding bulkiness to your design
- Can hold up to 150 lbs (68 kg) of weight
- Open channel between glass and raised edge prevents water accumulation and keeps your bath essentials dry
- Get the suite look and coordinate with other accessories from the Manhattan collection
- Designed in North America

MANHATTAN RECTANGULAR SHELF WITH GLASS - 10042819

SKU	Color	Dimensions & Weight	Packaging	MSRP
10042819-201	Brushed Chrome	13 5/8” x 4 5/8” x 1 1/8” / 1.82 lb	07 ft^3	$ 157
10042819-276	Glossy White			$ 157
10042819-340	Matte Black			$ 157
10042819-343	Brushed Gold			$ 157

STANDARD

Toutes ces dimensions sont approximatives. Afin d'assurer une installation parfaite, les dimensions de la structure doivent être vérifiées à partir de l'unité.

All dimensions are approximate. Structure measurements must be verified against the unit to ensure proper fit.

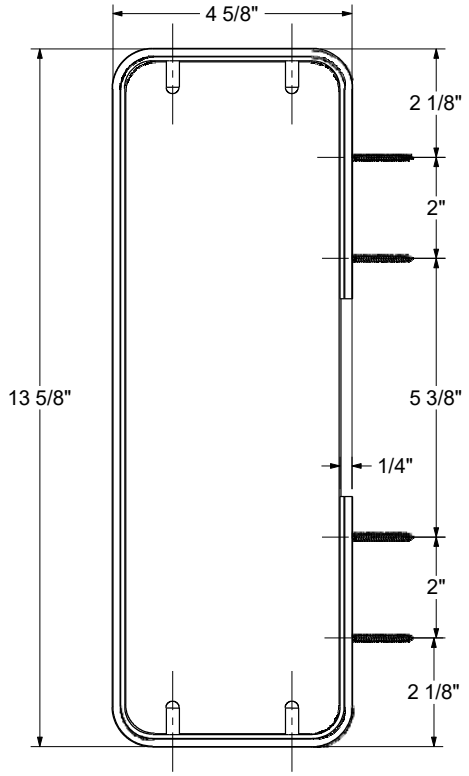

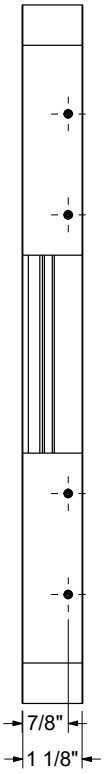

Vue iso pleine grandeur (maximiser l'espace)
Iso View full length (maximize the space)

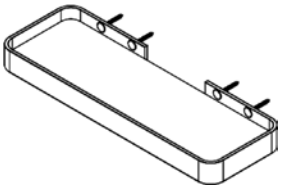

Manhattan Rectangular Shelf with Soap Tray

Material : Aluminum

Features

- Made of durable aluminum
- Shelf with slotted anti-slip tray for your soaps to drain and dry quickly
- Self-draining design with a channel to allow water to outflow naturally and keep your bath essentials dry
- Necessary hardware included for easy installation (4 screws, 4 caps)
- Built-in ledge to prevent products from falling
- Space-saving design
- Rust resistant for long lasting use
- Get the suite look and coordinate with other accessories part of the Manhattan collection
- DIY Installation

MANHATTAN RECTANGULAR SHELF WITH SOAP TRAY - 10045084

SKU	Color	Dimensions & Weight	Packaging	MSRP
10045084-340	Matte Black	13 5/8” x 4 5/8” x 1 1/8” / 0.87 lb	07 ft^3	$ 136

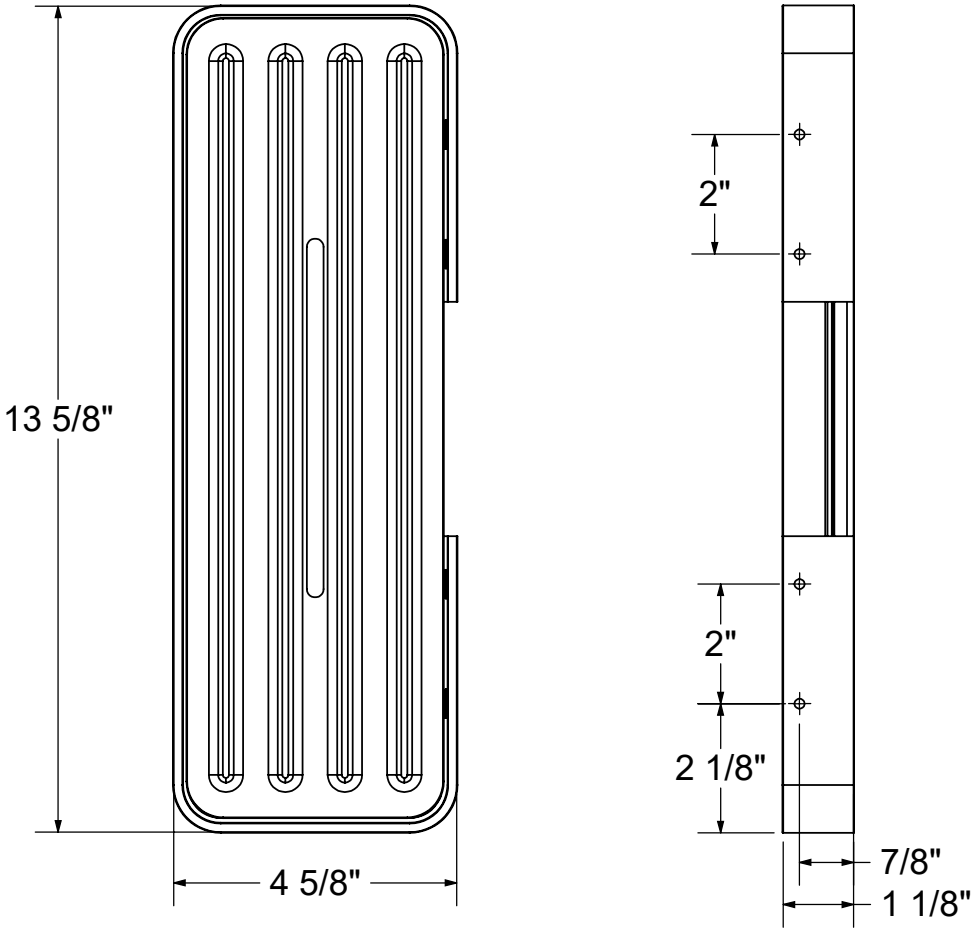

All dimensions are approximate. Structure measurements must be verified against the unit to ensure proper fit.

Manhattan 18 in. Single Towel Bar

Material : Aluminum

Features

- 18 in. towel bar providing convenient storage for a bath towel
- Necessary hardware included for easy installation (4 screws, 4 caps)
- Can be installed to any bathroom wall including tile, Utile, drywall, acrylic and cultured marble
- Easy to clean finish, simply wipe with a damp cloth to remove any dust or dirt
- Rust resistant for long lasting use
- Caps covering screws for a clean finished look
- Get the suite look and coordinate with other accessories from the Manhattan collection
- Designed in North America
- DIY Installation

MANHATTAN 18 IN. SINGLE TOWEL BAR - 10045088

SKU	Color	Dimensions & Weight	Packaging	MSRP
10045088-201	Brushed Chrome	18” x 2 13/16” x 1 1/8” / 0.52 lb	05 ft^3	$ 77
10045088-340	Matte Black			$ 77
10045088-343	Brushed Gold			$ 77

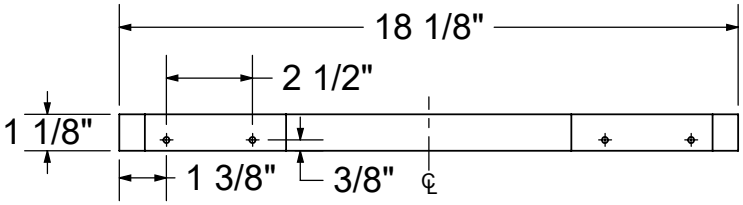

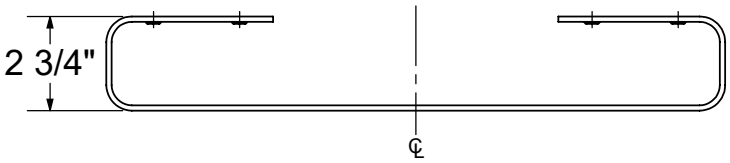

All dimensions are approximate. Structure measurements must be verified against the unit to ensure proper fit.

Manhattan 24 in. Double Towel Bar

Material : Aluminum

Features

- 24 in. double towel bar providing convenient storage for bath towels
- Necessary hardware included for easy installation (4 screws, 4 caps)
- Can be installed to any bathroom wall including tile, Utile, drywall, acrylic and cultured marble
- Easy to clean finish, simply wipe with a damp cloth to remove any dust or dirt
- Caps covering screws for a clean finished look
- Available in Matte Black, Brushed Gold, Brushed Chrome for versatility in your design
- Get the suite look and coordinate with other accessories from the Manhattan collection
- Designed in North America
- DIY Installation

MANHATTAN 24 IN. DOUBLE TOWEL BAR - 10045087

SKU	Color	Dimensions & Weight	Packaging	MSRP
10045087-201	Brushed Chrome	24” x 4 13/16” x 1 1/8” / 1.03 lb	0.1 ft^3	$ 92
10045087-340	Matte Black			$ 92
10045087-343	Brushed Gold			$ 92

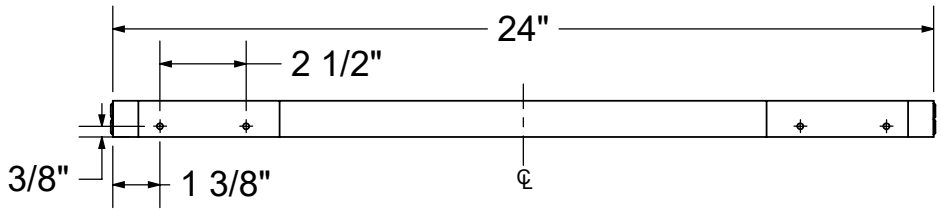

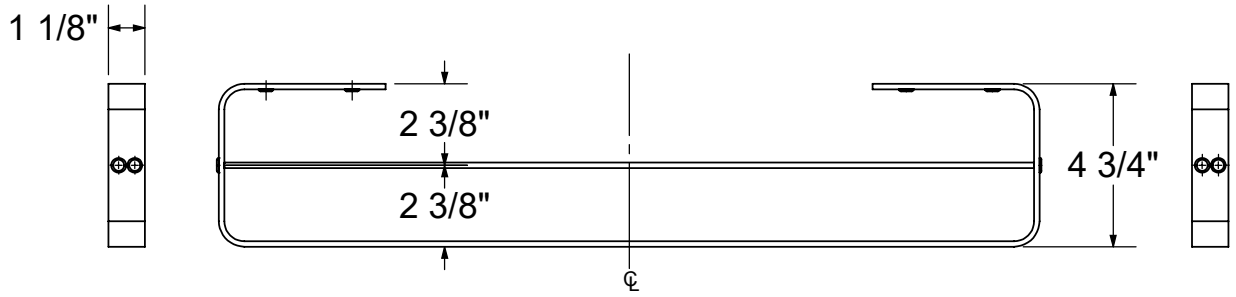

All dimensions are approximate. Structure measurements must be verified against the unit to ensure proper fit.

Manhattan Hand Towel Holder

Material : Aluminum

Features

- Made of durable aluminum
- 8 in. towel bar providing convenient storage for a hand towel
- Necessary hardware included for easy installation (4 screws, 4 caps)
- Can be installed to any bathroom wall including tile, Utile, drywall, acrylic and cultured marble
- Easy to clean finish, simply wipe with a damp cloth to remove any dust or dirt
- Caps covering screws for a clean finished look
- Get the suite look and coordinate with other accessories from the Manhattan collection
- Designed in North America
- DIY Installation

MANHATTAN HAND TOWEL HOLDER - 10045081

SKU	Color	Dimensions & Weight	Packaging	MSRP
10045081-201	Brushed Chrome	8” x 2 13/16” x 1 1/8” / 0.29 lb	02 ft^3	$ 47
10045081-340	Matte Black			$ 47
10045081-343	Brushed Gold			$ 47

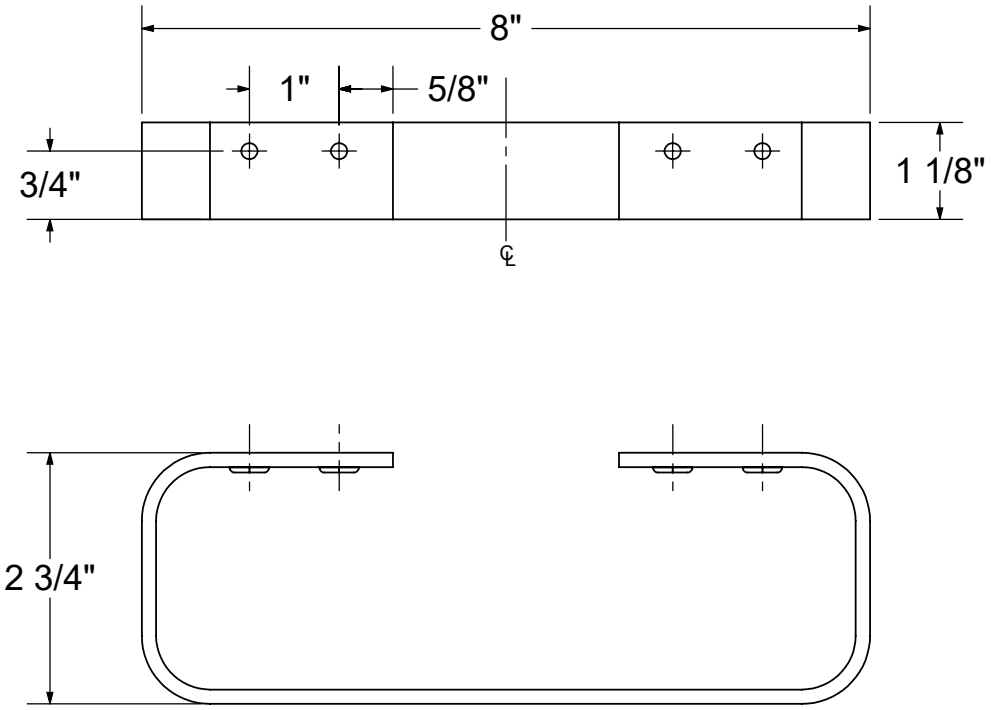

All dimensions are approximate. Structure measurements must be verified against the unit to ensure proper fit.

Manhattan Vertical Hand Towel Holder

Material : Aluminum

Features

- Made of durable aluminum
- 12 in. vertical towel bar provides convenient storage for bathrooms with limited wall space
- Necessary hardware included for easy installation (4 screws, 4 caps)
- Can be installed to any bathroom wall including tile, Utile, drywall, acrylic and cultured marble
- Space-saving design
- Rust resistant for long lasting use
- Get the suite look and coordinate with other accessories from the Manhattan collection
- Designed in North America
- DIY Installation

MANHATTAN VERTICAL HAND TOWEL HOLDER - 10045082

SKU	Color	Dimensions & Weight	Packaging	MSRP
10045082-201	Brushed Chrome	12” x 3 5/16” x 1 1/8” / 0.48 lb	04 ft^3	$ 47
10045082-340	Matte Black			$ 47
10045082-343	Brushed Gold			$ 47

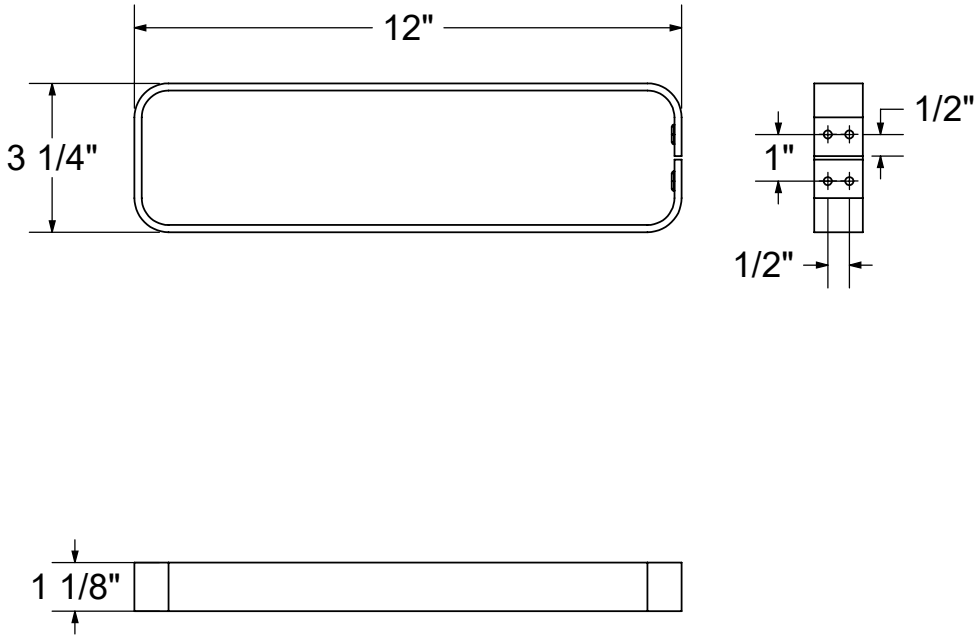

All dimensions are approximate. Structure measurements must be verified against the unit to ensure proper fit.

Keros Deckmounted Tub Faucet

Material : Brass

Features

- Deck-mount installation
- 3-hole installation
- Pullout hand shower with 60 in. hose that allows you to reach every corner of your bathtub
- 7 in. goose neck spout reach for ample clearance
- 6.625 in. spout height
- Swivel spout
- Ceramic disc valves for precise water flow and temperature control
- Mounting hardware included for easy installation
- Brass construction offers rust and corrosion resistant finish

KEROS DECKMOUNTED TUB FAUCET - 10045541

SKU	Color	Packaging	MSRP
10045541-084	Chrome	0.33 ft^3	$ 593
10045541-105	Brushed Nickel		$
10045541-340	Black		$ 669

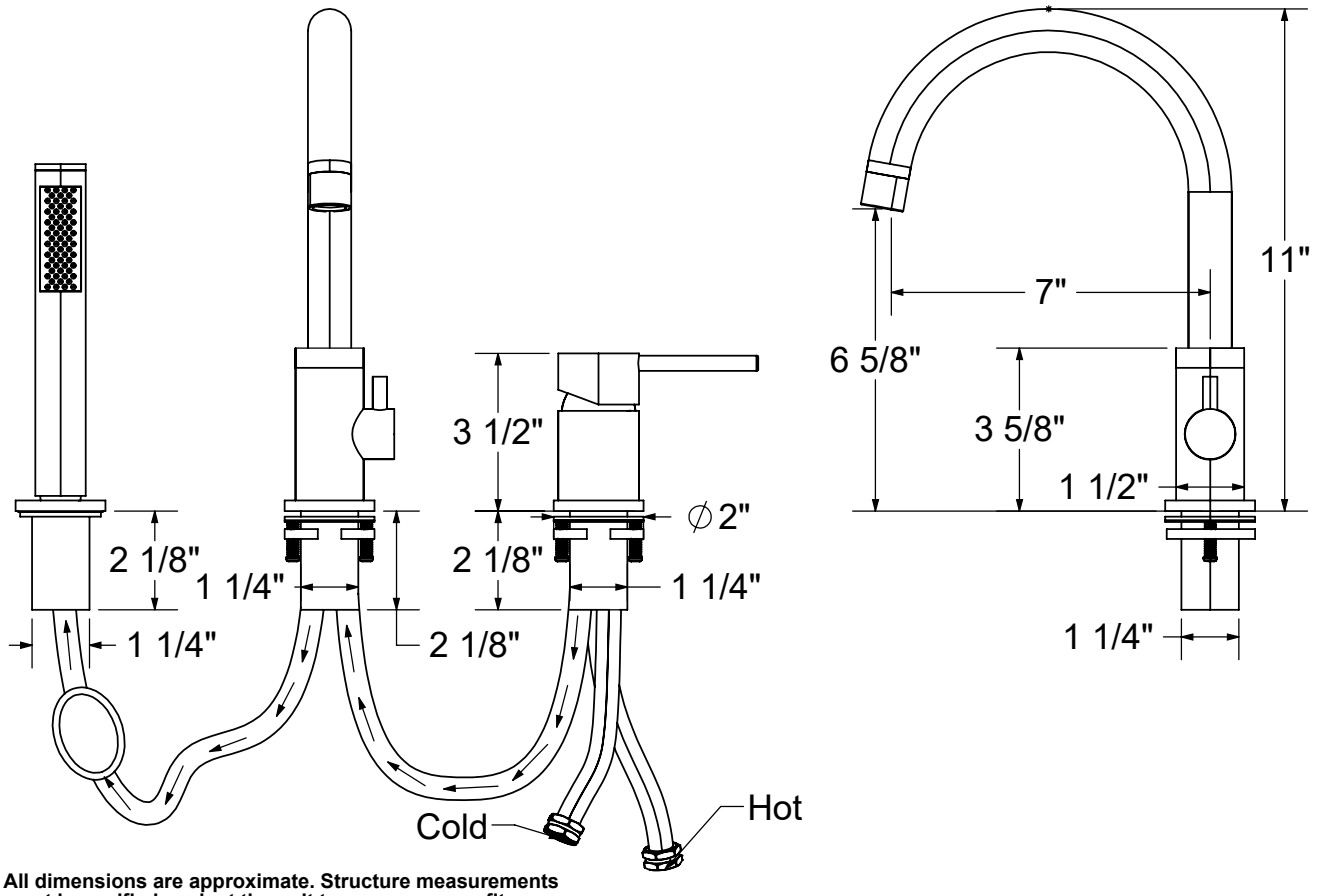

All dimensions are approximate. Structure measurements must be verified against the unit to ensure proper fit.

Rough-in dimensions may vary+/- 1/2" and are subject to change.

All products and specifications are subject to change without notice.

Linosa Freestanding Tub Faucet

Material : Brass

Features

- Freestanding design for a modern, minimalist look
- Single-handle design for easy control of water flow and temperature
- 60-inch hand shower hose for added reach
- Spout height of 39.625 in.
- Spout reach of 8.25 in. for ample clearance
- Overall height of 43.25 in. for a sleek look
- Ceramic disc valves for precise water flow and temperature control
- Includes all necessary mounting hardware for easy installation
- Brass construction offers rust and corrosion resistant finish

LINOSA FREESTANDING TUB FAUCET - 10045542

SKU	Color	Dimensions & Weight	Packaging	MSRP
10045542-084	Chrome	8 1/4” x 6 1/4” x 43 1/4” / 24 lb	1.1 ft^3	$ 898
10045542-105	Brushed Nickel			$
10045542-340	Black			$ 973

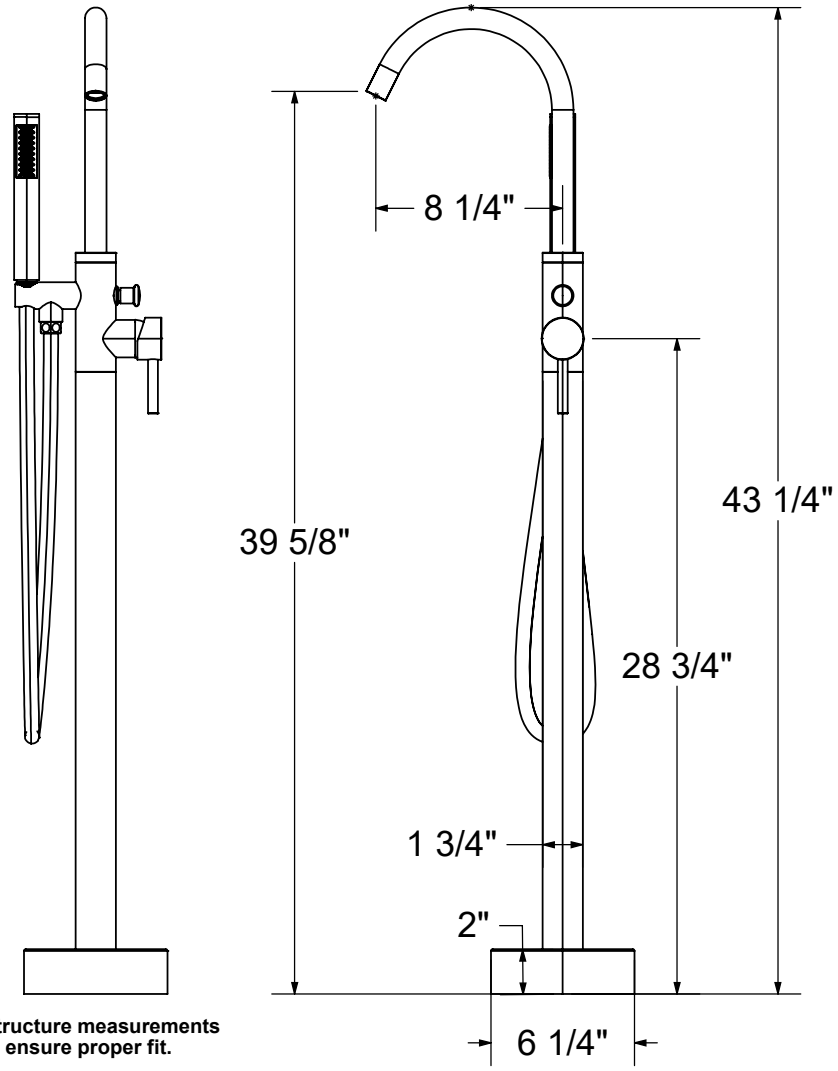

All dimensions are approximate. Structure measurements must be verified against the unit to ensure proper fit.

Rough-in dimensions may vary+/- 1/2" and are subject to change.

All products and specifications are subject to change without notice.

Manhattan Trim 94 in.

Material : Composite

Features

- Product size: 0.078 in. W x 94 in. H
- 2-piece kit
- Trims made of stone plastic composite
- Can be cut to size to accommodate any wall height
- Provides a waterproof barrier
- Long lasting trims with no visible silicone for easy maintenance
- Compatible with our 4 mm thick wall tile
- Provides the perfect finishing touch for your wall space
- Paired with it's tiled counterpart, this trim is versatile for installation in multiple areas of the home

MANHATTAN EDGE TRIM 94 IN. - 107637

SKU	Color	Dimensions & Weight	MSRP
107637-118-295-000	Marble Glacier	5/8” x 1/4” x 94” / 2.54 lb	$ 127
107637-118-296-000	Marble Dark Grey		$ 127
107637-118-297-000	Marble Light Grey		$ 127
107637-119-298-000	Concrete Grey		$ 127

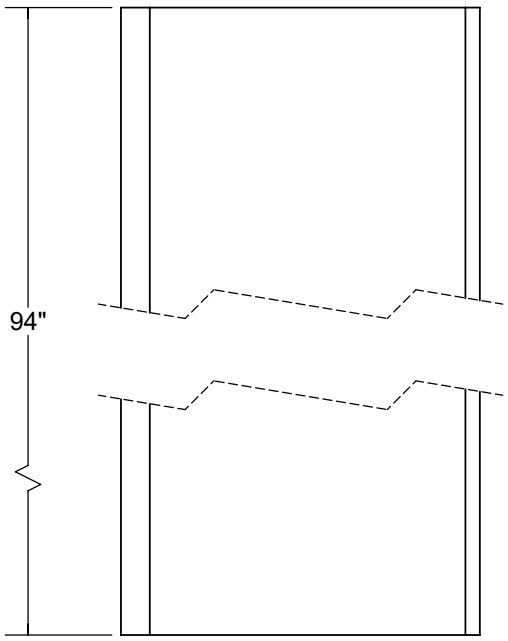

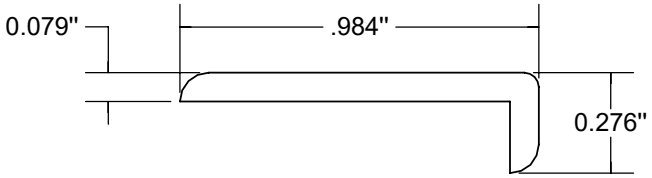

All dimensions are approximate. Structure measurements must be verified against the unit to ensure proper fit.

Arched Teak Shower Seat 48

Material : Teak

Features

- Model size : 43 3/8 L in. x 12 W in. x 2 3/8 H in.
- Removable seat making it adaptable for your confort and for your needed space
- Sturdy suction cups ensure secure seat attachment
- Convenient release mechanism for easy seat lifting
- The Galatea shower features integrated footrests that also provide support for the seat
- Made from top-quality teak wood, it combines luxury and durability to last for years
- Seat design allows easy water drainage
- The comfortable material provides the optimal relaxation experience
- Curved design maximizes shower space, allowing greater freedom of movement

ARCHED TEAK SHOWER SEAT 48 - 10045579

SKU	Color	Dimensions & Weight	MSRP
10045579-185	Teak		$ 311

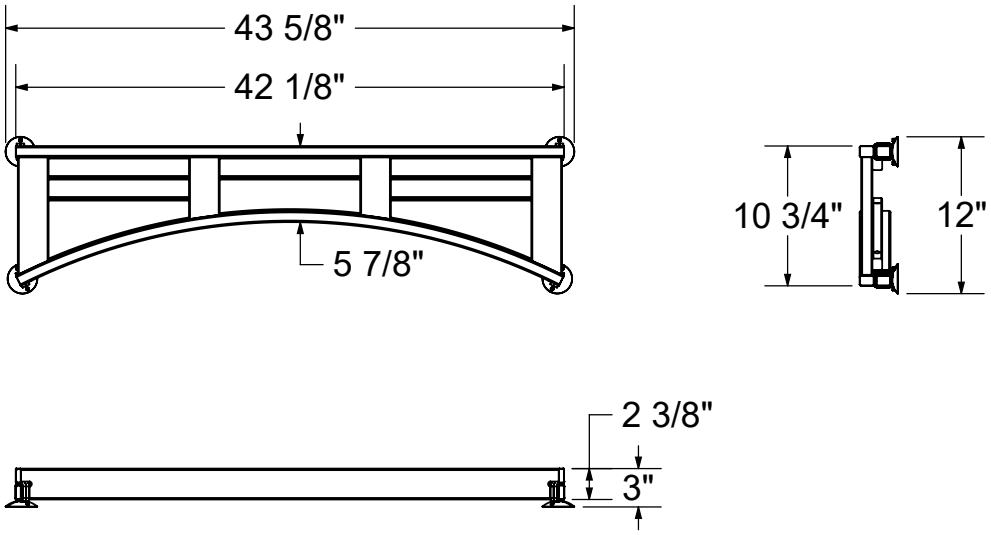

All dimensions are approximate. Structure measurements must be verified against the unit to ensure proper fit.
Toutes ces dimensions sont approximatives. Afin d'assurer une installation parfaite, les dimensions de la structure doivent être vérifiées à partir de l'unité.

Arched Teak Shower Seat 60

Material : Teak

Features

- Model size : 55 3/8 L in. x 12 W in. x 2 3/8 H in.
- Removable seat making it adaptable for your confort and for your needed space
- Sturdy suction cups ensure secure seat attachment
- Convenient release mechanism for easy seat lifting
- The Galatea shower features integrated footrests that also provide support for the seat
- Made from top-quality teak wood, it combines luxury and durability to last for years
- Seat design allows easy water drainage
- The comfortable material provides the optimal relaxation experience
- Curved design maximizes shower space, allowing greater freedom of movement

ARCHED TEAK SHOWER SEAT 60 - 10045580

SKU	Color	Dimensions & Weight	MSRP
10045580-185	Teak		$ 373

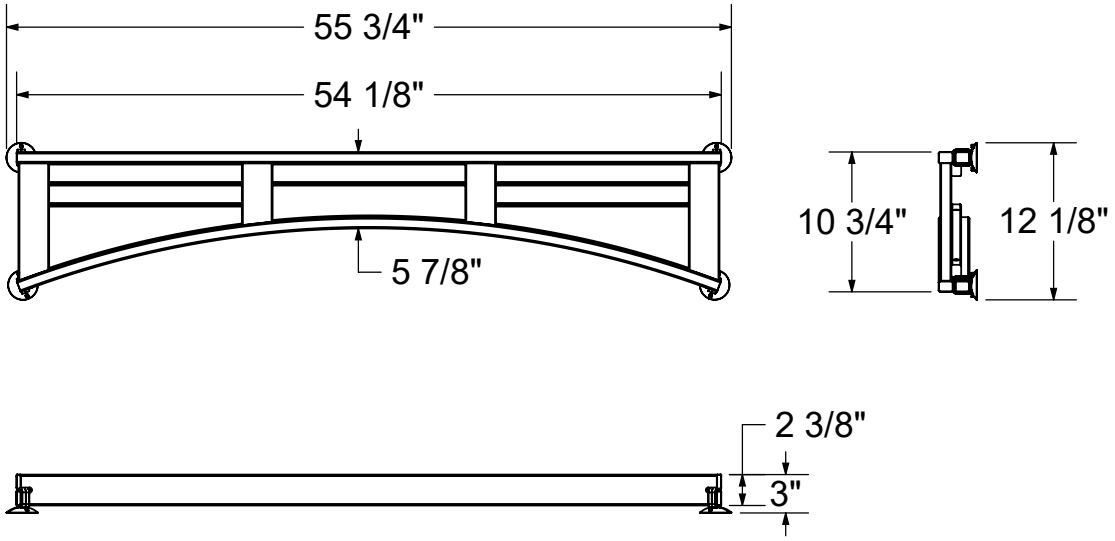

All dimensions are approximate. Structure measurements must be verified against the unit to ensure proper fit.
Toutes ces dimensions sont approximatives. Afin d'assurer une installation parfaite, les dimensions de la structure doivent être vérifiées à partir de l'unité.

Straight Teak Shower Seat 48

Material : Teak

Features

- Model size : 43 3/8 L in. x 12 W in. x 2 3/8 H in.
- Removable seat making it adaptable for your confort and for your needed space
- Sturdy suction cups ensure secure seat attachment
- Convenient release mechanism for easy seat lifting
- The Galatea shower features integrated footrests that also provide support for the seat
- Made from top-quality teak wood, it combines luxury and durability to last for years
- Seat design allows easy water drainage
- The comfortable material provides the optimal relaxation experience
- Straight design maximizes support space for optimized comfort

STRAIGHT TEAK SHOWER SEAT 48 - 10043853

SKU	Color	Dimensions & Weight	MSRP
10043853-185	Teak		$ 311

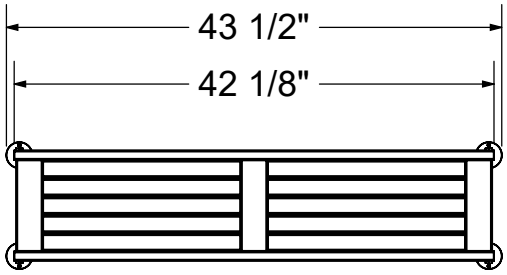

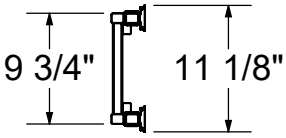

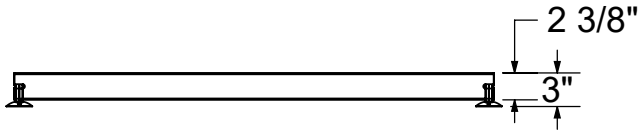

All dimensions are approximate. Structure measurements must be verified against the unit to ensure proper fit.
Toutes ces dimensions sont approximatives. Afin d'assurer une installation parfaite, les dimensions de la structure doivent être vérifiées à partir de l'unité.

Straight Teak Shower Seat 60

Material : Teak

Features

- Model size : 55 3/8 L in. x 12 W in. x 2 3/8 H in.
- Removable seat making it adaptable for your confort and for your needed space
- Sturdy suction cups ensure secure seat attachment
- Convenient release mechanism for easy seat lifting
- The Galatea shower features integrated footrests that also provide support for the seat
- Made from top-quality teak wood, it combines luxury and durability to last for years
- Seat design allows easy water drainage
- The comfortable material provides the optimal relaxation experience
- Straight design maximizes support space for optimized comfort

STRAIGHT TEAK SHOWER SEAT 60 - 10043854

SKU	Color	Dimensions & Weight	MSRP
10043854-185	Teak		$ 373

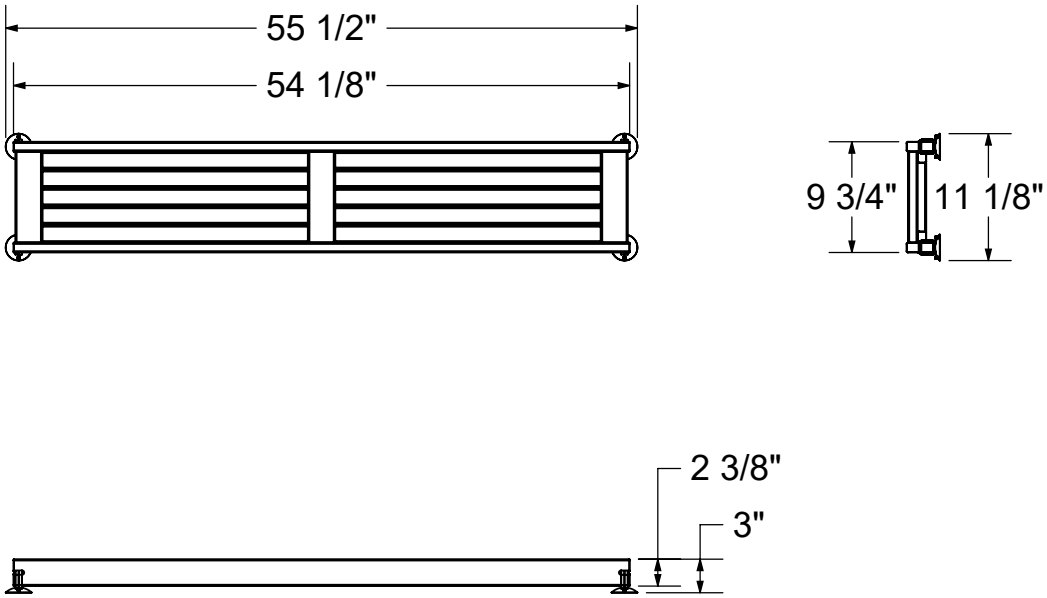

All dimensions are approximate. Structure measurements must be verified against the unit to ensure proper fit.
Toutes ces dimensions sont approximatives. Afin d'assurer une installation parfaite, les dimensions de la structure doivent être vérifiées à partir de l'unité.

18x12 Teak Fold-Up Seat

Material : Teak

Features

- Features a generous seat surface of 18 in. x 12 in. that provides a comfortable shower experience
- Made from natural teak wood, known for its solidity and resistance to water
- Includes mounting hardware for a secure and damage-free installation
- Specifically designed to function in compliant showers
- Provides 300 lb (136,078 kg) of support
- Features a smooth 3 inch seat and backrest for added comfort
- Crafted from high-quality, polished stainless steel for enhanced strength and durability
- Available in a beautiful satin brushed nickel finish, offering a polished look that complements the teak wood
- Professional install recommended for best result

18X12 TEAK FOLD-UP SEAT - 10049467

SKU	Color	Dimensions & Weight	Packaging	MSRP
10049467-185	Teak	15 1/2” x 20” x 15 3/4” / 19 lb	0.96 ft^3	$ 1414

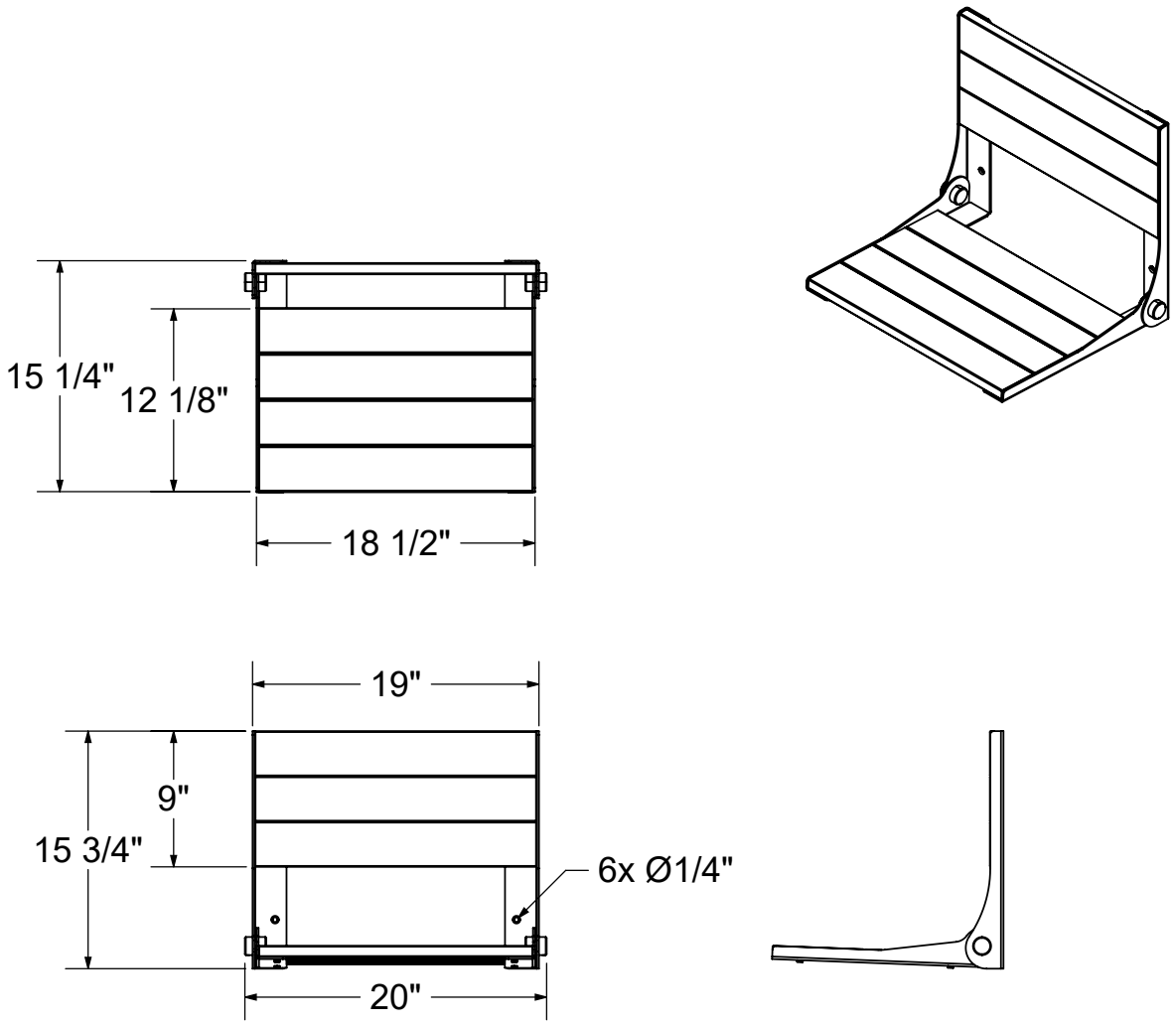

- All dimensions are approximate/Les dimensions sont approximatives
- Structure measurements must be verified against the unit to ensure proper fit/Dimensions de l'unité doivent être vérifié avant l'installation
- Installation to be completed in accordance with manufacturers specifications/Installation doit être faite selon les instructions du manufacturier

18x16 Phenolic Fold-Up Seat

Material : Composite

Features

- Features a generous seat surface of 18 in. x 15 3/4 in. that provides a comfortable shower experience
- Made from phenolic material, known for its durability and impact resistance
- Includes mounting hardware for a secure and damage-free installation
- Specifically designed to function in compliant showers
- Provides 300 lb (136,078 kg) of support
- Features a constant friction guide bracket that automatically helds the seat in a raised position, when not used, for additional safety
- Crafted from high-quality, polished stainless steel for enhanced strength and durability
- Available in a classic white finish, offering a timeless look that complements any decor
- Professional install recommended for best result

18X16 PHENOLIC FOLD-UP SEAT - 10049539

SKU	Color	Dimensions & Weight	Packaging	MSRP
10049539-002	White	17 1/4” x 18” x 13 3/4” / 14 lb	1.6 ft^3	$ 1414

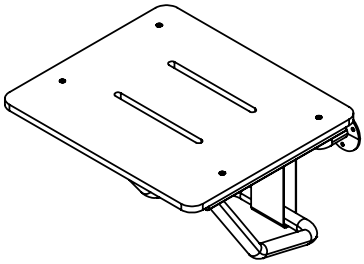

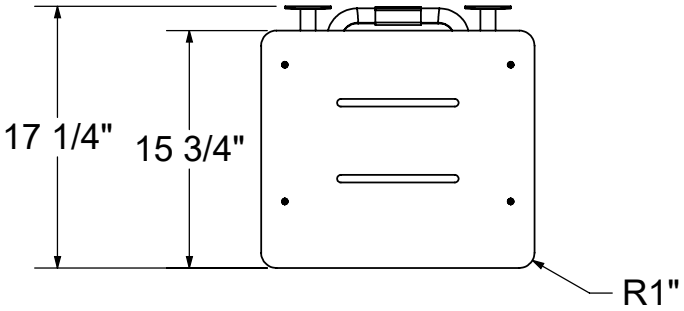

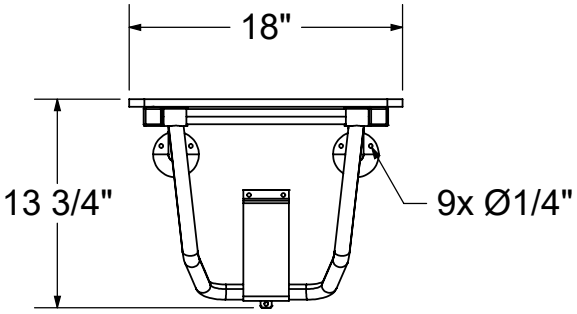

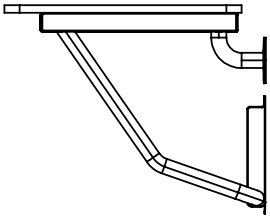

- All dimensions are approximate/Les dimensions sont approximatives
- Structure measurements must be verified against the unit to ensure proper fit/Dimensions de l'unité doivent être vérifié avant l'installation
- Installation to be completed in accordance with manufacturers specifications/Installation doit être faite selon les instructions du manufacturier

18 in. Grab Bar

Material : Stainless Steel

Features

- Provides 300 lb (136,078 kg) of support
- This product meets the standards set by the Americans with Disabilities Act (ADA) for accessibility, ensuring it is usable by individuals with disabilities
- Crafted from high-quality, polished stainless steel for enhanced strength and durability
- Stainless steel screws included
- Mounts directly on the shower walls at the height of your choice
- Features a textured surface for enhanced slip-resistance, providing added safety and stability
- Available in a classic chrome finish, offering a timeless and polished look that complements any decor
- The straight bar offers a minimalistic aesthetic while still providing the necessary support
- Available in a variety of sizes to suit your needs

18 IN. GRAB BAR - 10049553

SKU	Color	Dimensions & Weight	Packaging	MSRP
10049553-084	Chrome	18” x 3” x 2 3/4” / 5 lb	0.22 ft^3	$ 288

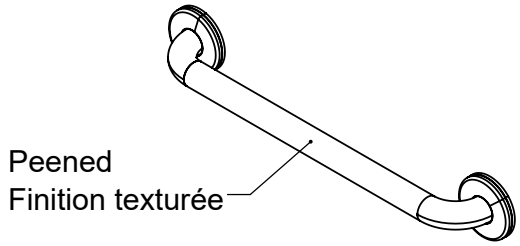

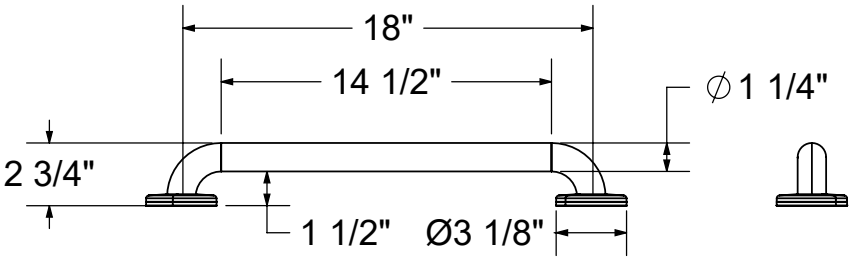

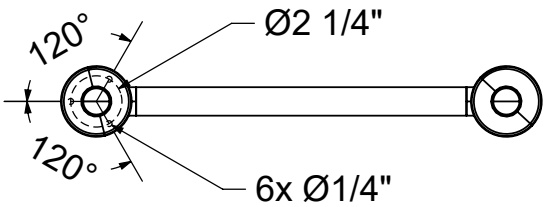

- All dimensions are approximate/Les dimensions sont approximatives
- Structure measurements must be verified against the unit to ensure proper fit/Dimensions de l'unité doivent être vérifié avant l'installation
- Installation to be completed in accordance with manufacturers specifications/Installation doit être faite selon les instructions du manufacturier

24 in. Grab Bar

Material : Stainless Steel

Features

- Provides 300 lb (136,078 kg) of support
- This product meets the standards set by the Americans with Disabilities Act (ADA) for accessibility, ensuring it is usable by individuals with disabilities
- Crafted from high-quality, polished stainless steel for enhanced strength and durability
- Stainless steel screws included
- Mounts directly on the shower walls at the height of your choice
- Features a textured surface for enhanced slip-resistance, providing added safety and stability
- Available in a classic chrome finish, offering a timeless and polished look that complements any decor
- The straight bar offers a minimalistic aesthetic while still providing the necessary support
- Available in a variety of sizes to suit your needs

24 IN. GRAB BAR - 10049554

SKU	Color	Dimensions & Weight	Packaging	MSRP
10049554-084	Chrome	24” x 3” x 2 3/4” / 5 lb	0.27 ft^3	$ 492

Go to Table of Contents

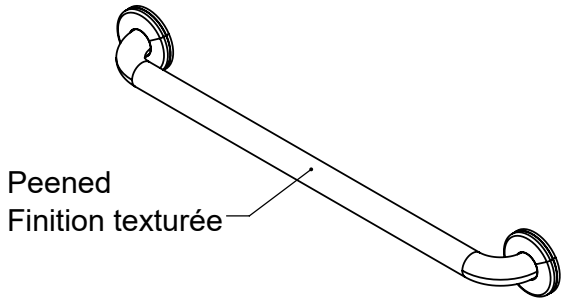

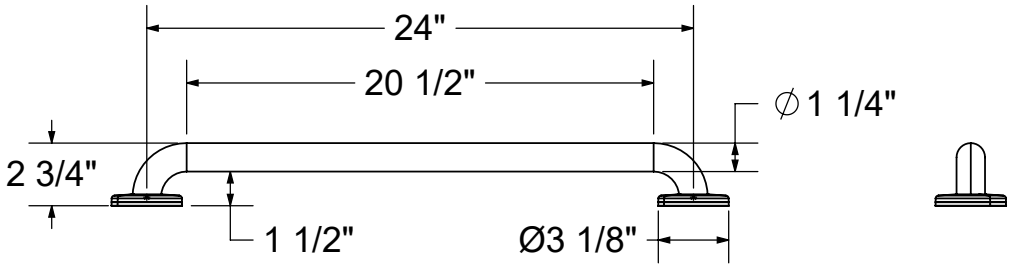

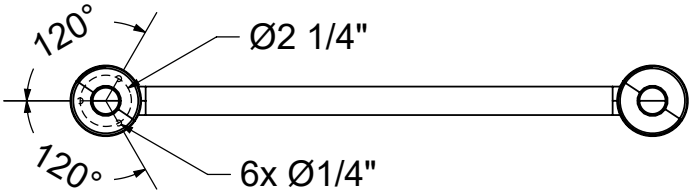

- All dimensions are approximate/Les dimensions sont approximatives
- Structure measurements must be verified against the unit to ensure proper fit/Dimensions de l'unité doivent être vérifié avant l'installation
- Installation to be completed in accordance with manufacturers specifications/Installation doit être faite selon les instructions du manufacturier

24 in. Straight Grab Bar

Material : Stainless Steel

Features

- Provides 300 lb (136,078 kg) of support
- This product meets the standards set by the Americans with Disabilities Act (ADA) for accessibility, ensuring it is usable by individuals with disabilities
- Crafted from high-quality, polished stainless steel for enhanced strength and durability
- Stainless steel screws included
- Mounts directly on the shower walls at the height of your choice
- Features a sleek, smooth surface, making it ideal for everyday use and easy to clean
- Available in matte black, white and chrome to accommodate your bathroom style
- The straight bar offers a minimalistic aesthetic while still providing the necessary support
- Available in a variety of sizes to suit your needs

24 IN. STRAIGHT GRAB BAR - 10029997

SKU	Color	Dimensions & Weight	Packaging	MSRP
10029997-002	White	27” x 3 1/8” x 2 3/4” / 5 lb	0.27 ft^3	$ 392
10029997-084	Chrome			$ 392
10029997-340	Matte Black			$ 392

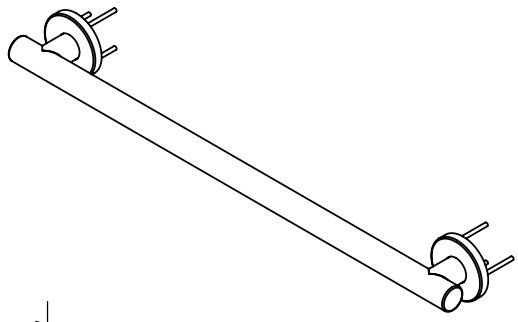

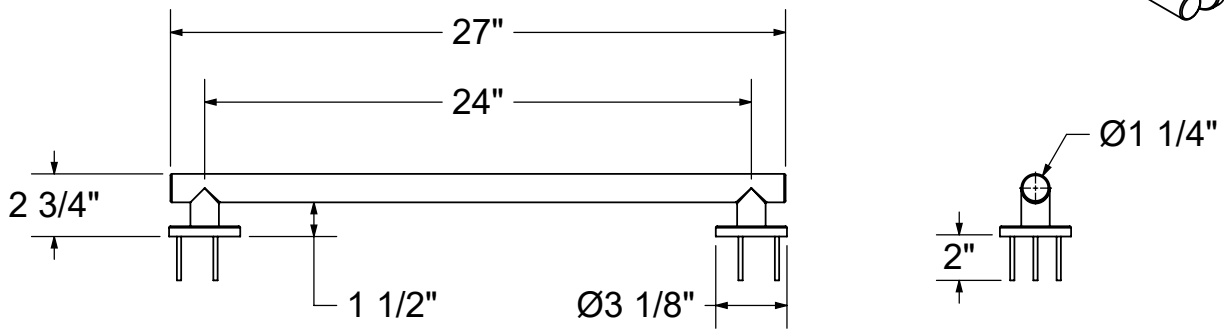

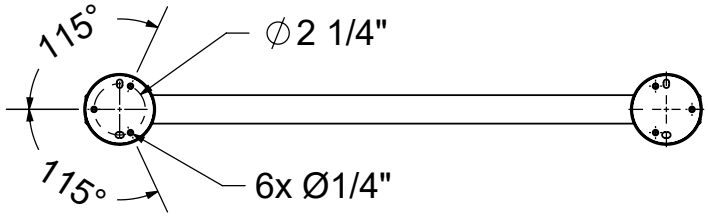

- All dimensions are approximate/Les dimensions sont approximatives
- Structure measurements must be verified against the unit to ensure proper fit/Dimensions de l'unité doivent être vérifié avant l'installation
- Installation to be completed in accordance with manufacturers specifications/Installation doit être faite selon les instructions du manufacturier

30 in. Grab Bar

Material : Stainless Steel

Features

- Provides 300 lb (136,078 kg) of support
- This product meets the standards set by the Americans with Disabilities Act (ADA) for accessibility, ensuring it is usable by individuals with disabilities
- Crafted from high-quality, polished stainless steel for enhanced strength and durability
- Stainless steel screws included
- Mounts directly on the shower walls at the height of your choice
- Features a textured surface for enhanced slip-resistance, providing added safety and stability
- Available in a classic chrome finish, offering a timeless and polished look that complements any decor
- The straight bar offers a minimalistic aesthetic while still providing the necessary support
- Available in a variety of sizes to suit your needs

30 IN. GRAB BAR - 10049555

SKU	Color	Dimensions & Weight	Packaging	MSRP
10049555-084	Chrome	30” x 3” x 2 3/4” / 6 lb	0.33 ft^3	$ 502

Go to Table of Contents

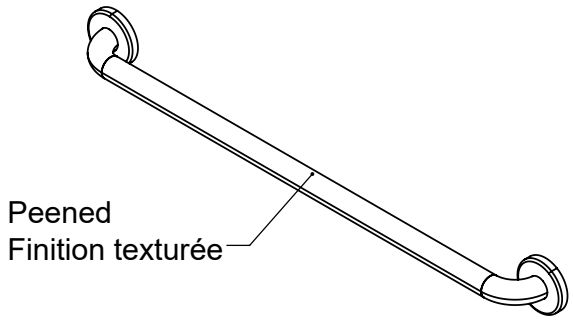

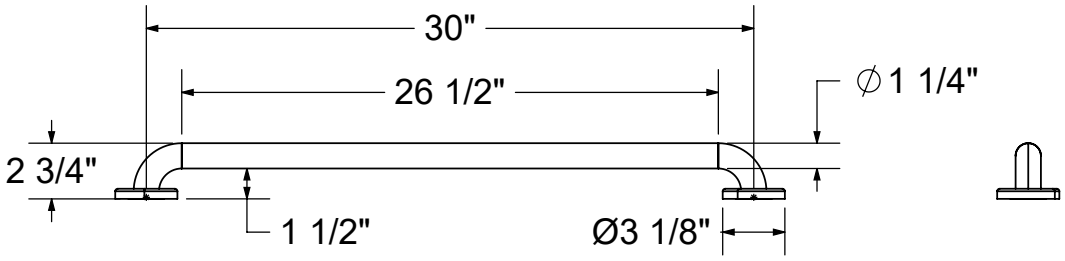

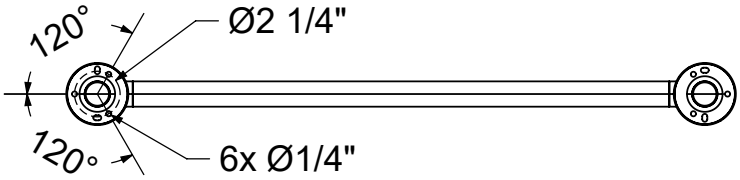

- All dimensions are approximate/Les dimensions sont approximatives
- Structure measurements must be verified against the unit to ensure proper fit/Dimensions de l'unité doivent être vérifié avant l'installation
- Installation to be completed in accordance with manufacturers specifications/Installation doit être faite selon les instructions du manufacturier

30x40 Left L-Shaped Grab Bar

Material : Stainless Steel

Features

- Provides 300 lb (136,078 kg) of support
- This product meets the standards set by the Americans with Disabilities Act (ADA) for accessibility, ensuring it is usable by individuals with disabilities
- Crafted from high-quality, polished stainless steel for enhanced strength and durability
- Stainless steel screws included
- Mounts directly on the shower walls at the height of your choice
- Features a textured surface for enhanced slip-resistance, providing added safety and stability
- Available in a classic chrome finish, offering a timeless and polished look that complements any decor
- Designed in a L-shape to meet the need for greater support
- Available in a left or right configuration to better suit your needs

30X40 LEFT L-SHAPED GRAB BAR - 10049548

SKU	Color	Dimensions & Weight	Packaging	MSRP
10049548-084	Chrome	42” x 2 3/4” x 32” / 10 lb	3.65 ft^3	$ 570

Go to Table of Contents

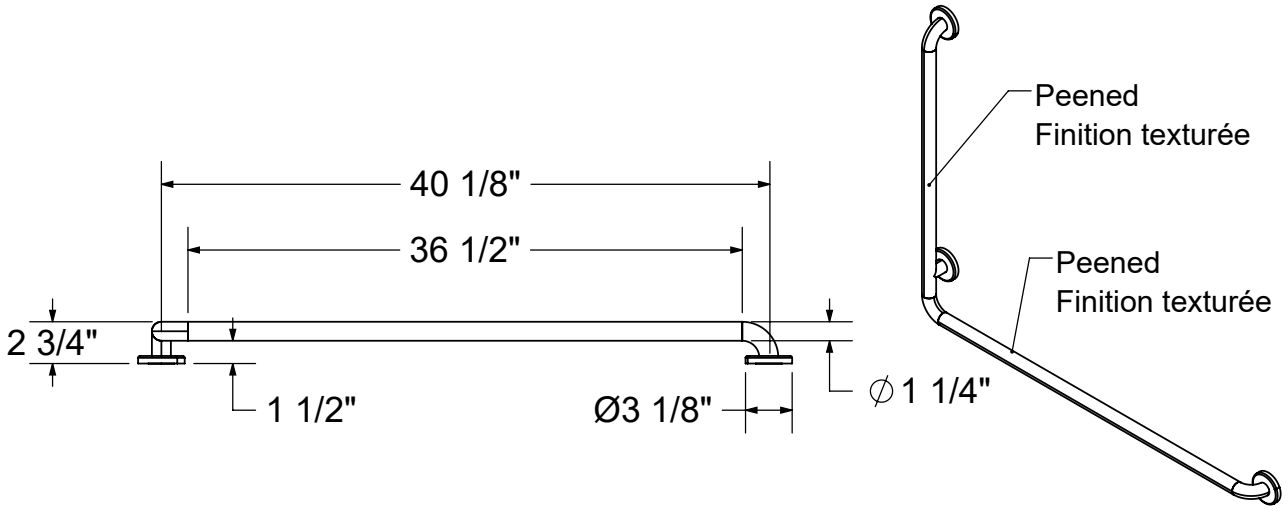

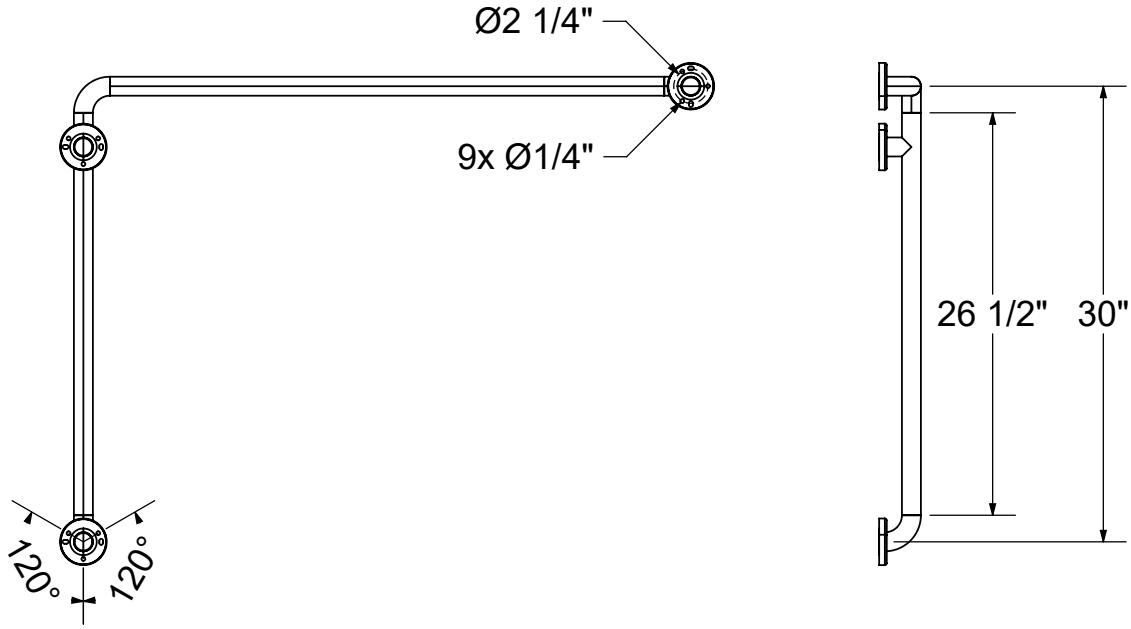

- All dimensions are approximate/Les dimensions sont approximatives
- Structure measurements must be verified against the unit to ensure proper fit/Dimensions de l'unité doivent être vérifié avant l'installation
- Installation to be completed in accordance with manufacturers specifications/Installation doit être faite selon les instructions du manufacturier

Go to Table of Contents

30x40 Right L-Shaped Grab Bar

Material : Stainless Steel

Features

- Provides 300 lb (136,078 kg) of support
- This product meets the standards set by the Americans with Disabilities Act (ADA) for accessibility, ensuring it is usable by individuals with disabilities
- Crafted from high-quality, polished stainless steel for enhanced strength and durability
- Stainless steel screws included
- Mounts directly on the shower walls at the height of your choice
- Features a textured surface for enhanced slip-resistance, providing added safety and stability
- Available in a classic chrome finish, offering a timeless and polished look that complements any decor
- Designed in a L-shape to meet the need for greater support
- Available in a left or right configuration to better suit your needs

30X40 RIGHT L-SHAPED GRAB BAR - 10049549

SKU	Color	Dimensions & Weight	Packaging	MSRP
10049549-084	Chrome	42” x 2 3/4” x 32” / 10 lb	3.65 ft^3	$ 570

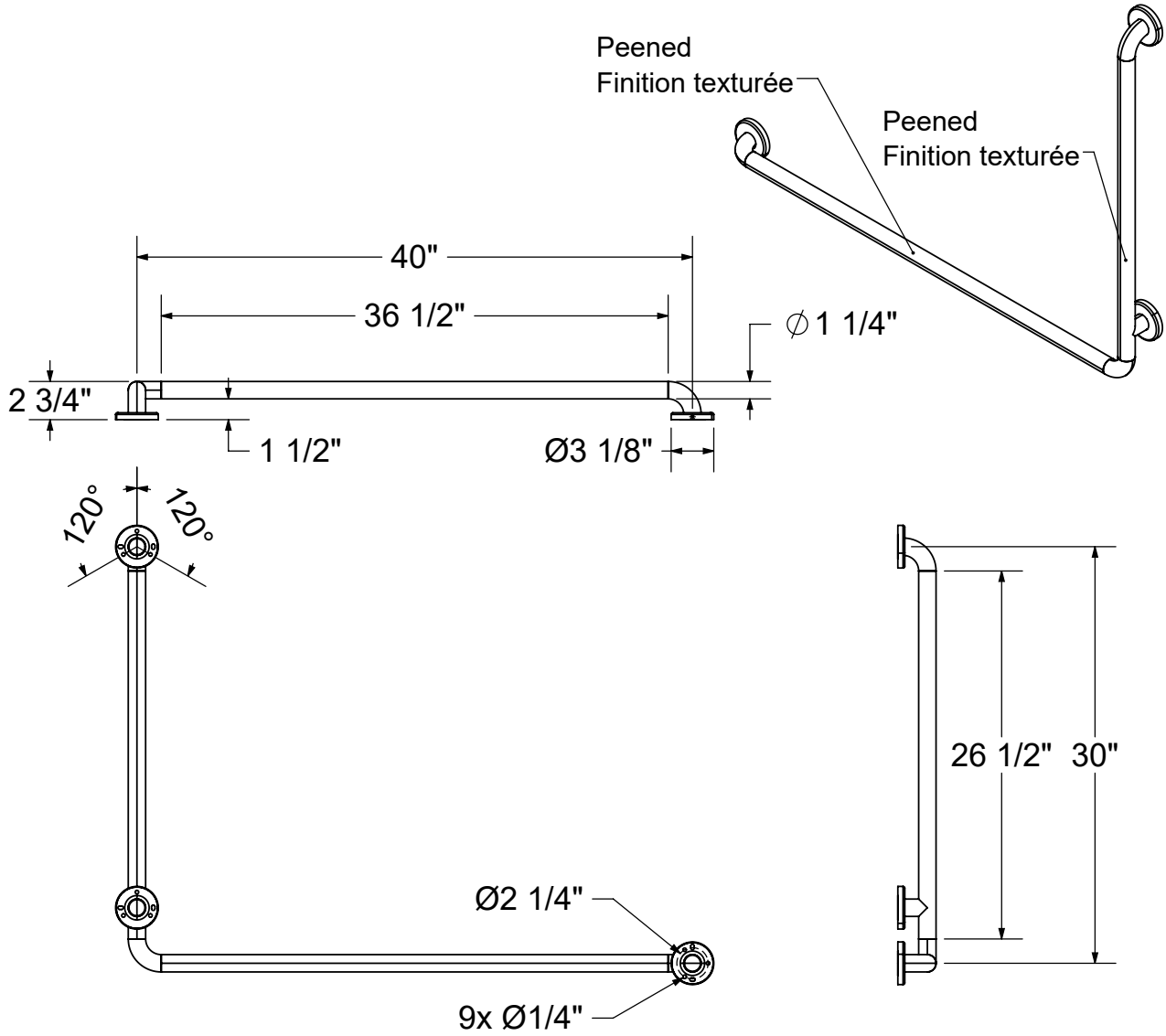

- All dimensions are approximate/Les dimensions sont approximatives
- Structure measurements must be verified against the unit to ensure proper fit/Dimensions de l'unité doivent être vérifié avant l'installation
- Installation to be completed in accordance with manufacturers specifications/Installation doit être faite selon les instructions du manufacturier

42 in. Grab Bar

Material : Stainless Steel

Features

- Provides 300 lb (136,078 kg) of support
- This product meets the standards set by the Americans with Disabilities Act (ADA) for accessibility, ensuring it is usable by individuals with disabilities
- Crafted from high-quality, polished stainless steel for enhanced strength and durability
- Stainless steel screws included
- Mounts directly on the shower walls at the height of your choice
- Features a textured surface for enhanced slip-resistance, providing added safety and stability
- Available in a classic chrome finish, offering a timeless and polished look that complements any decor
- The straight bar offers a minimalistic aesthetic while still providing the necessary support
- Available in a variety of sizes to suit your needs

42 IN. GRAB BAR - 10049556

SKU	Color	Dimensions & Weight	Packaging	MSRP
10049556-084	Chrome	42” x 3” x 2 3/4” / 7 lb	0.44 ft^3	$ 524

Go to Table of Contents

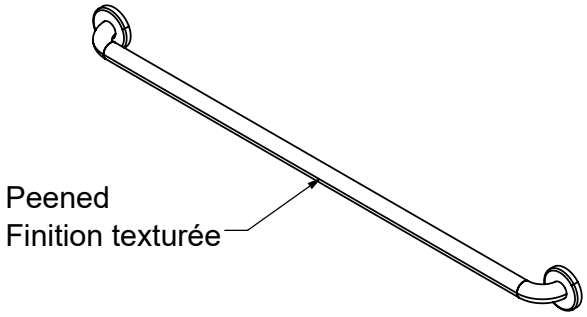

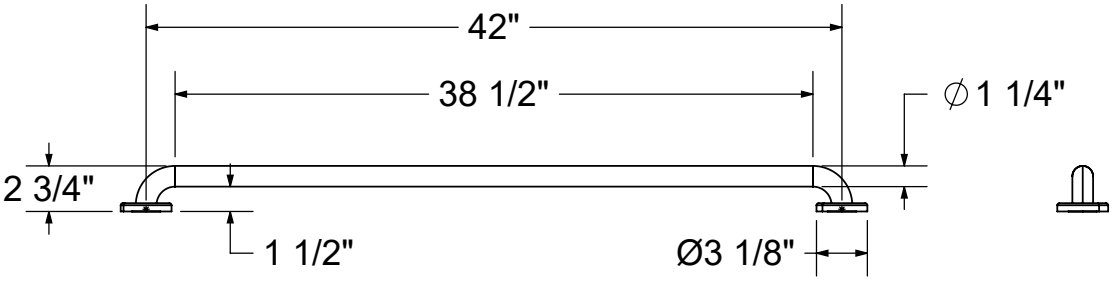

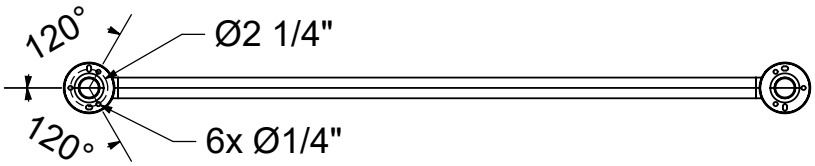

- All dimensions are approximate/Les dimensions sont approximatives
- Structure measurements must be verified against the unit to ensure proper fit/Dimensions de l'unité doivent être vérifié avant l'installation
- Installation to be completed in accordance with manufacturers specifications/Installation doit être faite selon les instructions du manufacturier

42 in. Straight Grab Bar

Material : Stainless Steel

Features

- Provides 300 lb (136,078 kg) of support
- This product meets the standards set by the Americans with Disabilities Act (ADA) for accessibility, ensuring it is usable by individuals with disabilities
- Crafted from high-quality, polished stainless steel for enhanced strength and durability
- Stainless steel screws included
- Mounts directly on the shower walls at the height of your choice
- Features a sleek, smooth surface, making it ideal for everyday use and easy to clean
- Available in matte black, white and chrome to accommodate your bathroom style
- The straight bar offers a minimalistic aesthetic while still providing the necessary support
- Available in a variety of sizes to suit your needs

42 IN. STRAIGHT GRAB BAR - 10030084

SKU	Color	Dimensions & Weight	Packaging	MSRP
10030084-002	White	45” x 3 1/8” x 2 3/4” / 7 lb	0.44 ft^3	$ 524
10030084-084	Chrome			$ 524
10030084-340	Matte Black			$ 524

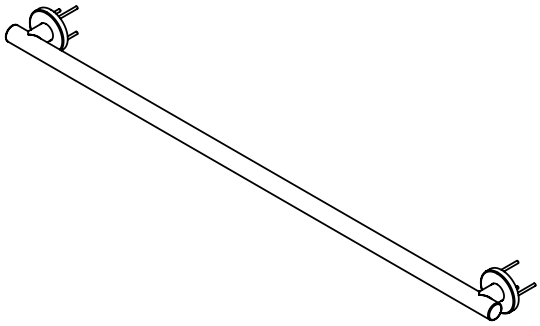

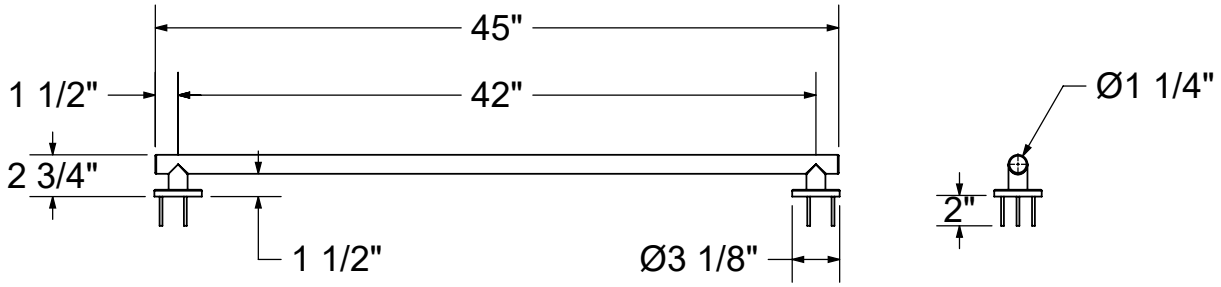

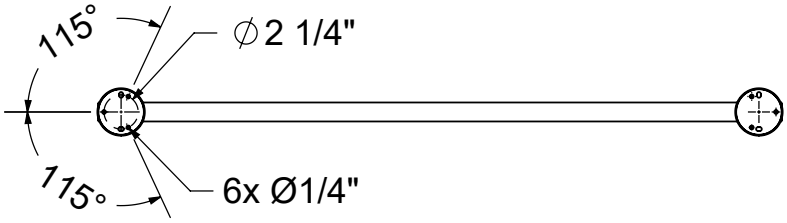

- All dimensions are approximate/Les dimensions sont approximatives
- Structure measurements must be verified against the unit to ensure proper fit/Dimensions de l'unité doivent être vérifié avant l'installation
- Installation to be completed in accordance with manufacturers specifications/Installation doit être faite selon les instructions du manufacturier

Fixed Panel Support Bar

Material : Stainless Steel

Features

- Support arm for fix panel, Inline panel and return panels
- Can be used on glass panels of thickness from 6mm (1/4in) to 10mm (3/8in)
- This streamlined support bar secures the glass panel with a minimalist design, ensuring stability without compromising the openness of your shower space

FIXED PANEL SUPPORT BAR - 10037592

SKU	Color	MSRP
10037592-084-602	Chrome	$ 87
10037592-173-601	Dark Bronze	$ 86
10037592-305-602	Brushed Nickel	$ 86
10037592-340-602	Matte Black	$ 89

L-Shape Support Arm

Material : Stainless Steel

Features

- Support arm for fix panel, Inline panel and return panels
- Can be used on glass panels of thickness from 6mm (1/4in) to 10mm (3/8in).
- Its elegant L shape follows both the wall and the glass panel. So nothing obstructs the shower space

L-SHAPE SUPPORT ARM - 10068701

SKU	Color	MSRP
10068701-084-602	Chrome	$ 164
10068701-305-602	Brushed Nickel	$ 170
10068701-340-602	Matte Black	$ 170

STANDARD

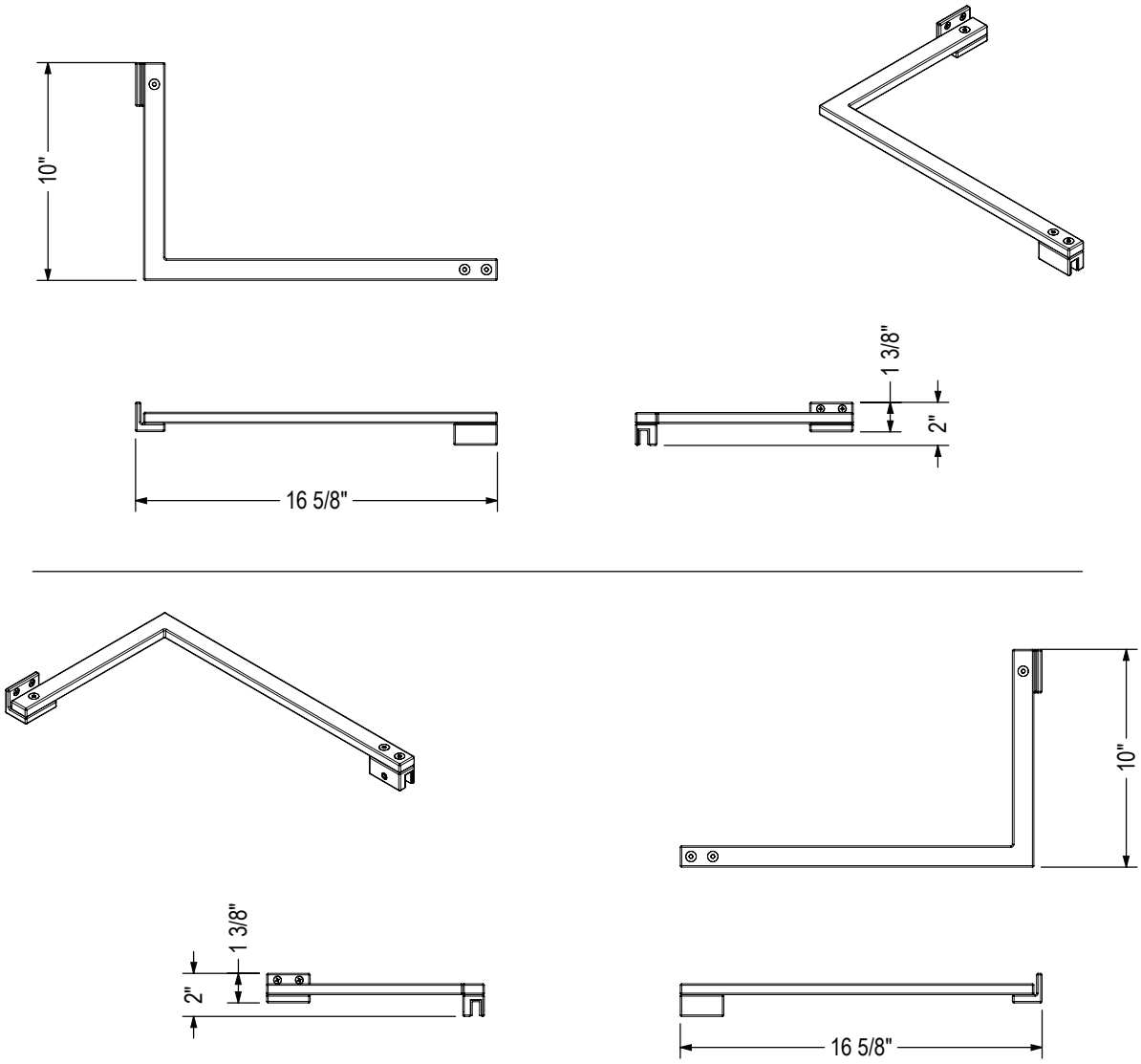

BOTH LEFT AND RIGHT CONFIGURATION
CAN BE DONE WITH THE SAME ASSEMBLY

Manhattan Bottle Holder - Pack of 2

Material : Aluminum

Features

- Pack of 2 bottle holders
- Made of durable aluminum
- Necessary hardware included for easy installation (4 screws, 4 caps)
- Fits most bottle sizes
- Can be installed inside and outside the bathroom
- Can be installed to any bathroom wall including tile, Utile, drywall, acrylic and cultured marble
- Rust resistant for long lasting use
- Get the suite look and coordinate with other accessories from the Manhattan collection
- Designed in North America

MANHATTAN BOTTLE HOLDER - PACK OF 2 - 10045090

SKU	Color	Dimensions & Weight	Packaging	MSRP
10045090-201	Brushed Chrome	1” x 3” x 2 13/16” / 0.33 lb	02 ft^3	$ 47
10045090-340	Matte Black			$ 47
10045090-343	Brushed Gold			$ 47

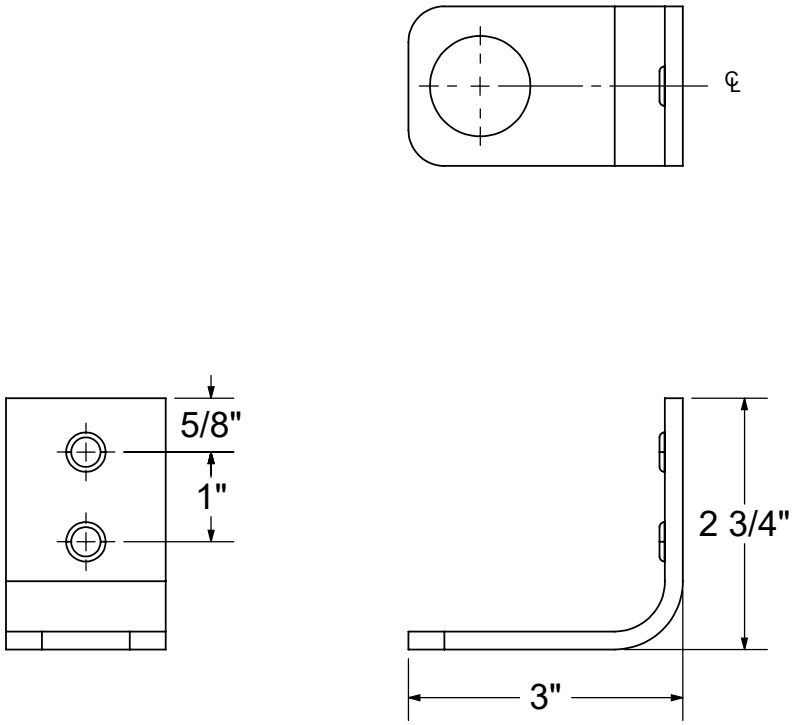

All dimensions are approximate. Structure measurements must be verified against the unit to ensure proper fit.

Manhattan Hook - Pack of 2

Material : Aluminum

Features

- Made of durable aluminum
- Pack of 2 hooks
- Necessary hardware included for easy installation (4 screws, 4 caps)
- Can be installed to any bathroom wall including tile, Utile, drywall, acrylic and cultured marble
- Perfect for hanging towels, bathrobes and other bathroom essentials
- Rust resistant for long lasting use
- Get the suite look and coordinate with other accessories from the Manhattan collection
- Designed in North America
- DIY Installation

MANHATTAN HOOK - PACK OF 2 - 10045083

SKU	Color	Dimensions & Weight	Packaging	MSRP
10045083-201	Brushed Chrome	1” x 1 5/16” x 3 1/2” / 0.18 lb	01 ft^3	$ 32
10045083-340	Matte Black			$ 32
10045083-343	Brushed Gold			$ 32

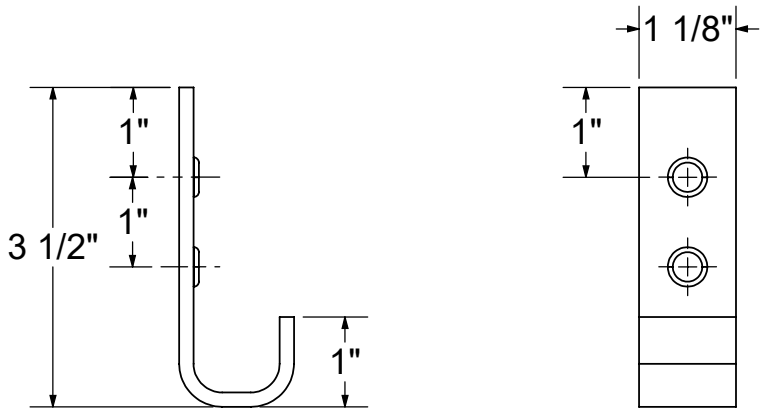

All dimensions are approximate. Structure measurements must be verified against the unit to ensure proper fit.

Manhattan Small Hooks - Pack of 3

Material : Aluminum

Features

- Pack of 3 hooks
- Made of durable aluminum
- No hardware necessary, easy clip on any Manhattan collection accessory
- Combine these hanging hooks with the towel bars or shelves from the Manhattan collection to add functionality and design to your space
- Perfect for hanging towels and other small bathroom essentials allowing them to dry faster
- Rust resistant for long lasting use
- Available in Matte Black, Brushed Gold, Brushed Chrome for versatility in your design
- Get the suite look and coordinate with other accessories from the Manhattan collection
- Designed in North America

MANHATTAN SMALL HOOKS - PACK OF 3 - 10045089

SKU	Color	Dimensions & Weight	Packaging	MSRP
10045089-201	Brushed Chrome	1/2” x 5/16” x 2 5/16” / 0.04 lb	0 ft^3	$ 32
10045089-340	Matte Black			$ 32
10045089-343	Brushed Gold			$ 32

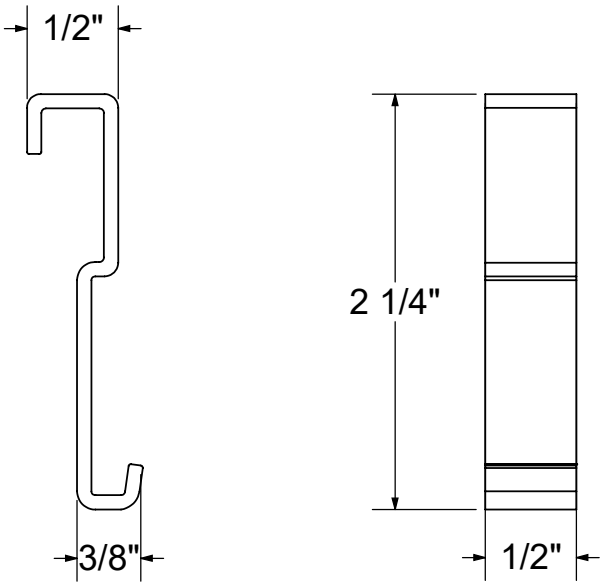

All dimensions are approximate. Structure measurements must be verified against the unit to ensure proper fit.

Manhattan Squeegee

Material : Silicone

Features

- Blade width: 11 in.
- Designed to wipe glass perfectly and prevent water stains
- Flexible blade for easy manipulation
- Mounting block and silicone rope included offering a choice of two storage options
- Seamless design that do not accumulate dirt and is easy clean
- Comfortable anti-slip handle
- Rope made of silicone that will stay dry and keep squeegee looking brand new
- Ideal to use for shower door, house window, car windows and mirrors
- Daily usage will help keep your shower door clean longer

MANHATTAN SQUEEGEE - 10045085

SKU	Color	Dimensions & Weight	Packaging	MSRP
10045085-001	White	11” x 1 3/4” x 8 3/4” / 0.51 lb	09 ft^3	$ 54
10045085-015	Black			$ 54

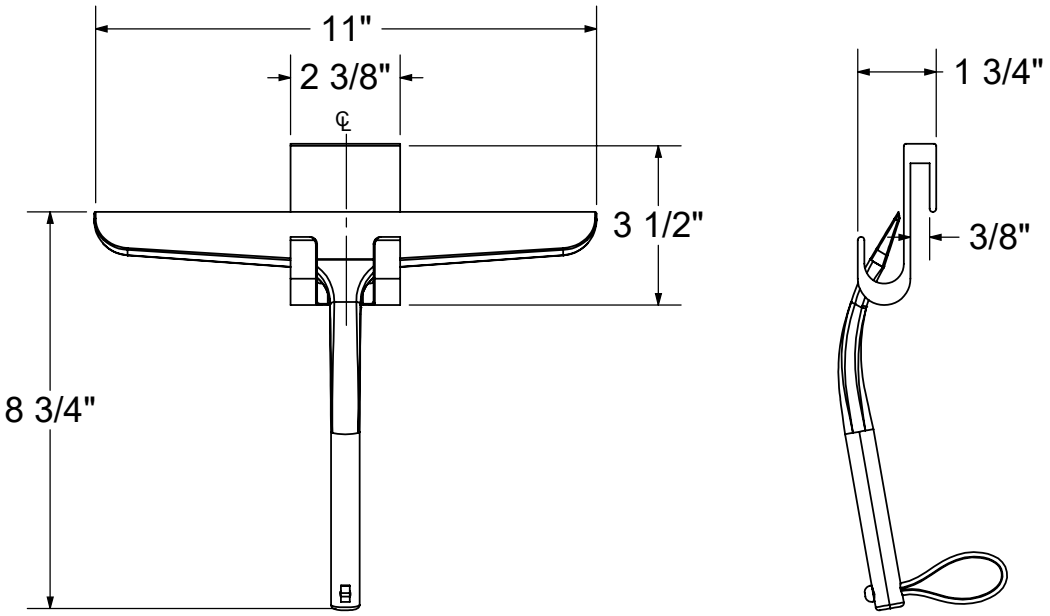

All dimensions are approximate. Structure measurements must be verified against the unit to ensure proper fit.

Manhattan Toilet Paper Holder

Material : Aluminum

Features

- Product size: 5.9 in. L x 3.5 in. W x 1.1 in. H
- Made of durable aluminum
- Can be installed to any bathroom wall including tile, Utile, drywall, acrylic and cultured marble
- Can be installed horizontally or vertically offering versatility and a space saving solution
- Designed to hold the roll in place and change it easily
- Available in Matte Black, Brushed Gold, Brushed Chrome for versatility in your design
- Get the suite look and coordinate with other accessories from the Manhattan collection
- Designed in North America
- DIY Installation

MANHATTAN TOILET PAPER HOLDER - 10045086

SKU	Color	Dimensions & Weight	Packaging	MSRP
10045086-201	Brushed Chrome	5 15/16” x 3 1/2” x 1 1/8” / 0.2 lb	02 ft^3	$ 35
10045086-340	Matte Black			$ 35
10045086-343	Brushed Gold			$ 35

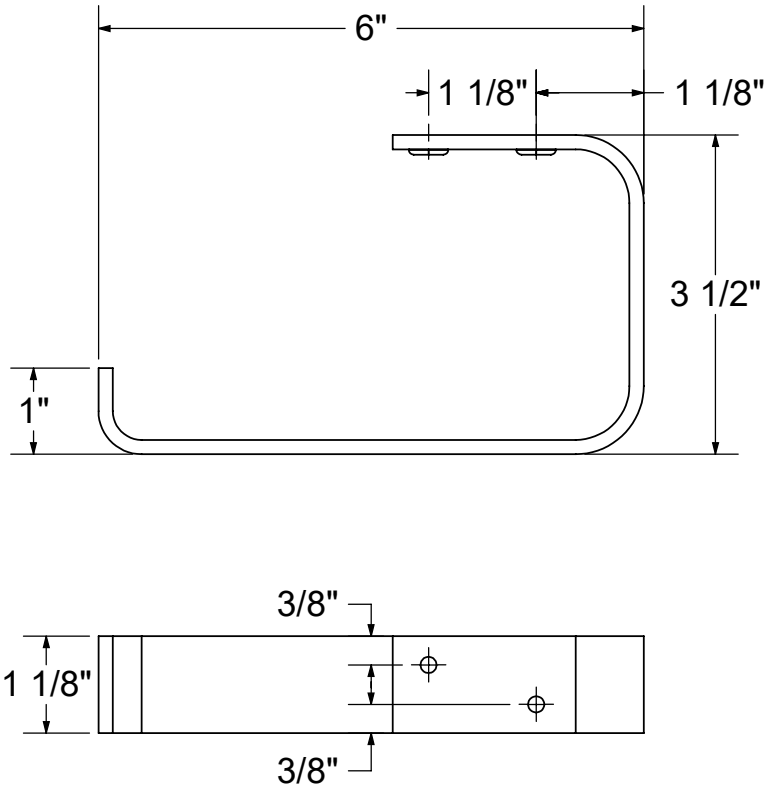

All dimensions are approximate. Structure measurements must be verified against the unit to ensure proper fit.

Bathtub Drain

Material : Metal

Features

- Model size: 2 3/4 L in. x 2 3/4 W in. x 3 1/8 H in.
- Crafted with durable stainless steel materials for long-lasting performance
- Resistant to tarnishing, corrosion, and discoloration
- Coordinates perfectly with other MAAX bathroom fixtures and accessories
- Universal design fits most standard bathtubs for versatile use
- Quick-drying and easy to clean, preventing mold or mildew buildup
- The design allows water to pass through while trapping hair, soap residue, and other debris
- Easy to install and compatible with standard plumbing connections
- Available in 5 finishes : White, Chrome, Brushed Nickel, Dark Bronze and Matte Black

BATHTUB DRAIN - 10037678

SKU	Color	Dimensions & Weight	Packaging	MSRP
10037678-002	White	2 3/4” x 2 3/4” x 3 1/8” / 0.66 lb	02 ft^3	$ 203
10037678-105	Brushed Nickel			$ 203
10037678-173	Dark Bronze			$ 203
10037678-340	Matte Black			$ 203

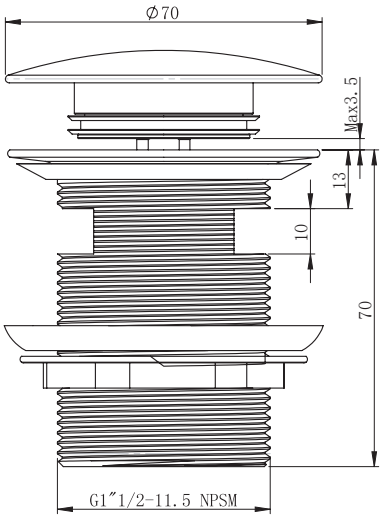
∅70
Max3.5
13
10
70
G1″1/2-11.5 NPSM

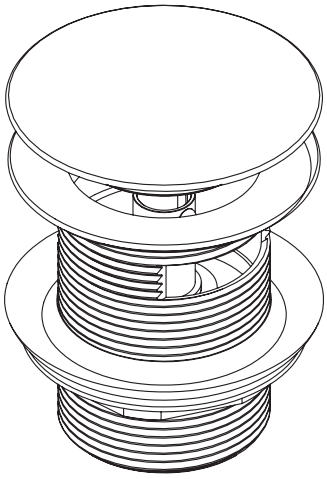

Bathtub Waste and Overflow

Material : Polypropylene

Features

- Model size : 19 3/8 L in. x 3 1/2 W in. x 28 3/8 H in.
- Made from water-resistant or waterproof materials that can withstand exposure to water
- Resistant to tarnishing, corrosion, and discoloration
- Coordinates perfectly with other MAAX bathroom fixtures and accessories
- The cable length is ideal for tubs with 17 to 24 in. of depth for a perfect fit
- Quick-drying and easy to clean, preventing mold or mildew buildup
- Helps maintain water levels at a safe and desired level
- The flexible neck provides an easier installation due to its greater malleability
- Available in 2 finishes : Chrome and Brushed Nickel

BATHTUB WASTE AND OVERFLOW - 10025720

SKU	Color	Dimensions & Weight	Packaging	MSRP
10025720-084	Chrome	19 3/8” x 3 1/2” x 28 3/8” / 2.1 lb	0.35 ft^3	$ 489
10025720-105	Brushed Nickel			$ 489

Go to Table of Contents

NOTE:
'A' + 'B' NOT TO EXCEED 33"

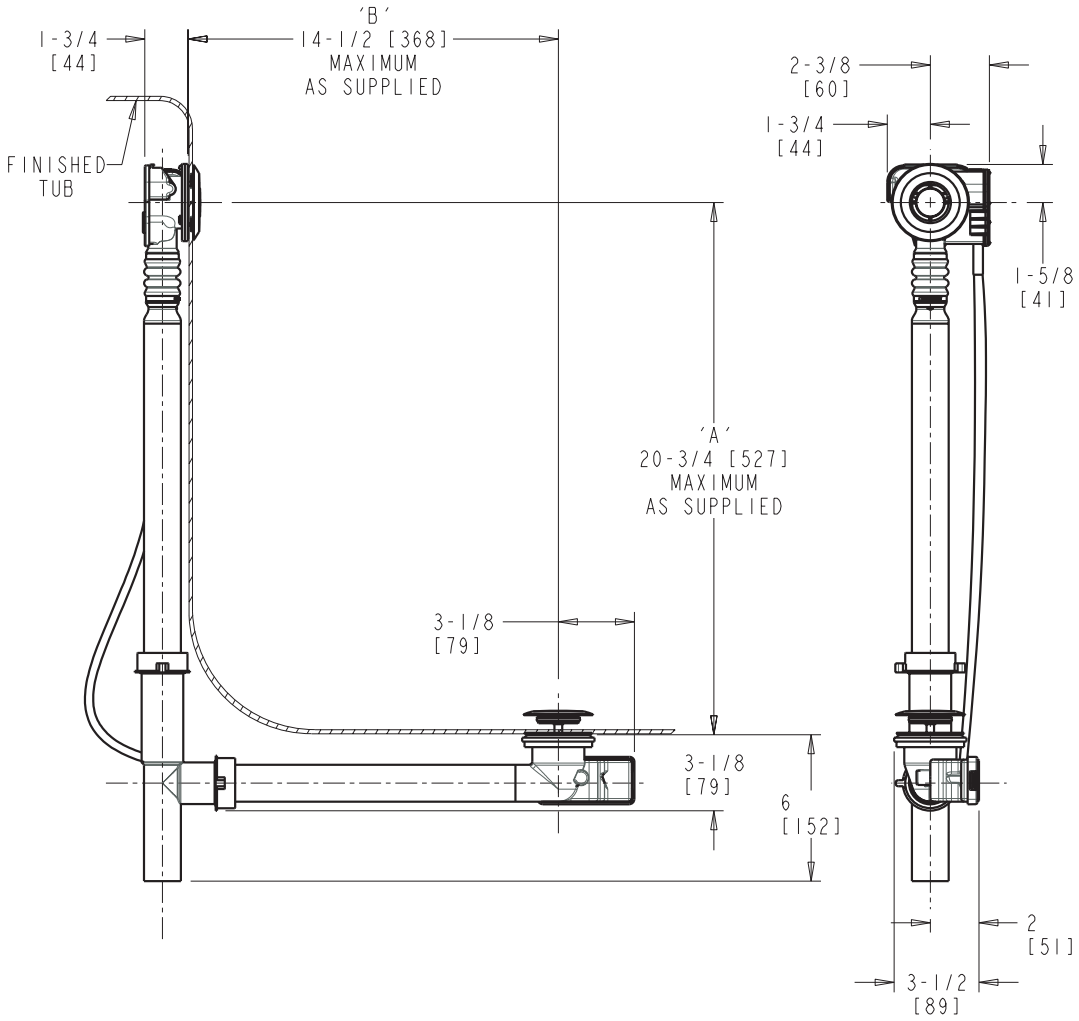

DIMENSIONS ARE IN INCHES AND [MILLIMETERS].

TECHNICAL DATA

- PUSH CONTROL CABLE-OPERATED BATH WASTE AND OVERFLOW
- WITH DECORATIVE TRIM KIT AND FLEXIBLE NECK
- FITS MOST TUBS 24"-27" DEEP
- 1-1/2" TUBULAR PP .08" WALL
- FITS TUB WALL THICKNESS UP TO 1/2"
- 2" DIA. DRAIN HOLE OPENING
- 2" TO 2-1/2" DIA. OVERFLOW HOLE OPENING
- MOLDED PLASTIC PUSH BUTTON & PLUNGER; FINISHED AS SPECIFIED ABOVE
- STAINLESS STEEL STRAINER
- 33" TEFLON® COATED STAINLESS STEEL CABLE
- INSTALATION TOOLS INCLUDED
- ASME A112.18.2/CSA B125.2 COMPLIANT

Bathtub Waste and Overflow

Material : Polypropylene

Features

- Model size : 18 1/4 L in. x 3 5/8 W in. x 28 1/8 H in.
- Made from water-resistant or waterproof materials that can withstand exposure to water
- Resistant to tarnishing, corrosion, and discoloration
- Coordinates perfectly with other MAAX bathroom fixtures and accessories
- The cable length is ideal for tubs with 17 to 24 in. of depth for a perfect fit
- Quick-drying and easy to clean, preventing mold or mildew buildup
- Helps maintain water levels at a safe and desired level
- Manufactured with precision to meet industry standards
- Available in 3 finishes : White, Chrome and Brushed Nickel

BATHTUB WASTE AND OVERFLOW - 10022491

SKU	Color	Dimensions & Weight	Packaging	MSRP
10022491-001	White	18 1/4” x 3 5/8” x 28 1/8” / 2.1 lb	0.35 ft^3	$ 362
10022491-084	Chrome			$ 362
10022491-105	Brushed Nickel			$ 362

Go to Table of Contents

NOTE:
'A' + 'B' NOT TO EXCEED 33"

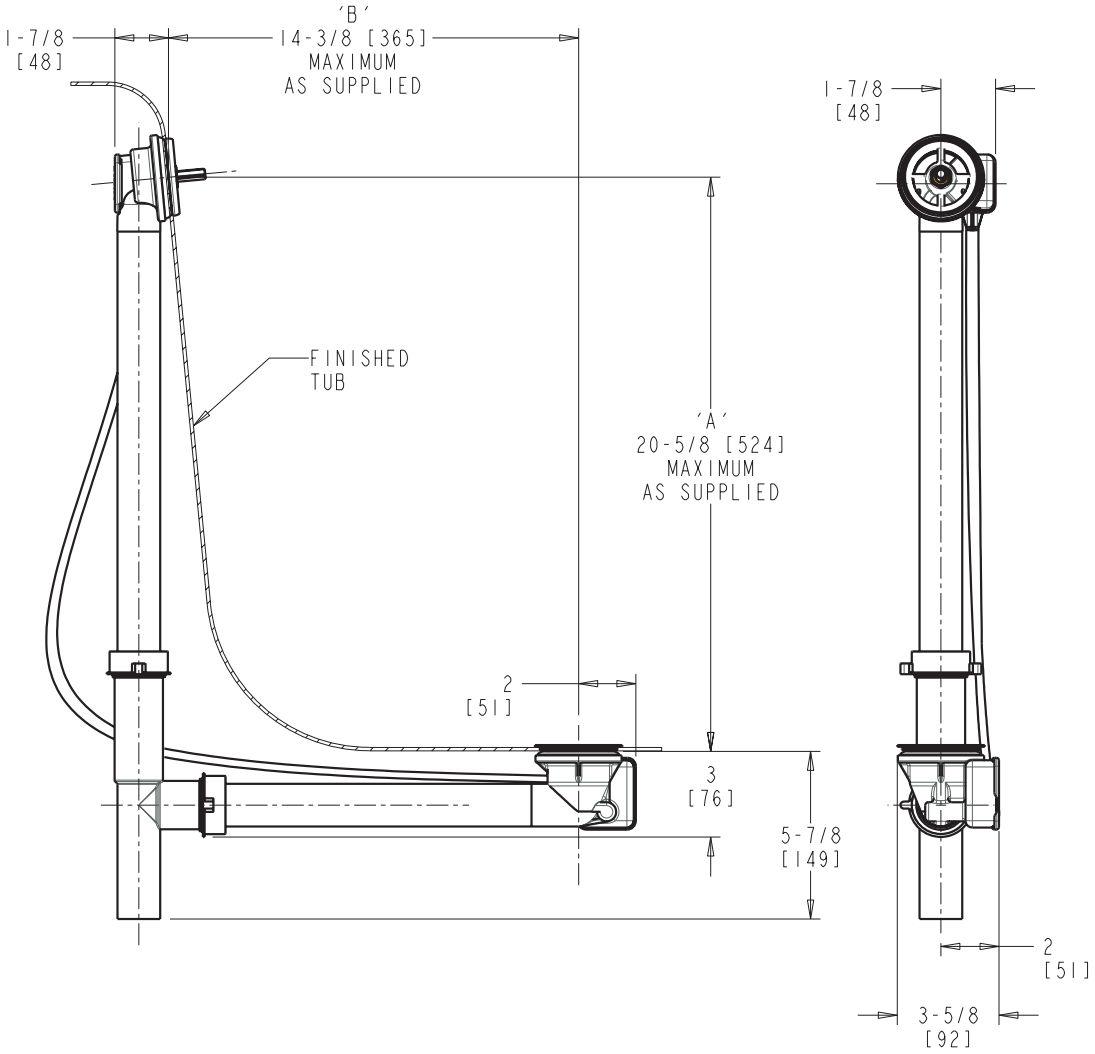

DIMENSIONS ARE IN INCHES AND [MILLIMETERS].

TECHNICAL DATA

- TURN CONTROL CABLE-OPERATED BATH WASTE AND OVERFLOW
- ROUGH-IN BODY ONLY
- FITS MOST TUBS 17"-24" DEEP
- 1-1/2" TUBULAR PP .08 WALL
- FITS TUB WALL THICKNESS 1/16" TO 5/16"
- 2" DIA. DRAIN HOLE OPENING
- 2" TO 2-1/2" DIA. OVERFLOW HOLE OPENING
- STAINLESS STEEL STRAINER
- 33" TEFLON® COATED STAINLESS STEEL CABLE
- INSTALLATION TOOL INCLUDED
- ASME A112.18.2/CSA B125.2 COMPLIANT

F2 Drain - ABS kit

Material : ABS

Features

F2 DRAIN - ABS KIT - 10032747				
SKU	**Color**	**Dimensions & Weight**	**Packaging**	**MSRP**
10032747	Black	7 1/2” x 5 5/8” x 7 5/8” / 0.9 lb	0.2 ft^3	$ 239

F2 Drain - PVC kit

Material : PVC

Features

- Model size : 7 1/2 L in. x 5 5/8 W in. x 7 5/8 H in.
- Made of durable PVC material for long-lasting performance
- Efficient Water Drainage: with its optimized design, this drain kit ensures efficient water flow, preventing any potential clogging or overflow issues
- Minimum height required for F2 drain assembly is 10 3/8-inch from the bathroom rough floor
- Floor opening must be between 4 1/2-inch and 6-inch for perfect connection and alignment
- Quick and easy to use, saves time and money while also providing access to the plumbing without having to demolish the floor
- The F2 drain easy installation and access also facilitates eventual plumbing repairs
- Perform a leak test before completing the installation for peace of mind
- F2 Drain is a MAAX innovation designed to simplify your life with an easy installation

F2 DRAIN - PVC KIT - 10034341

SKU	Color	Dimensions & Weight	Packaging	MSRP
10034341	White	7 1/2” x 5 5/8” x 7 5/8” / 0.9 lb	0.2 ft^3	$ 239

Linear overflow metal trim

Material : Metal

Features

- Model size: 3 3/4 L in. x 1 W in. x 7/16 H in.
- Crafted with durable stainless steel materials for long-lasting performance
- Resistant to tarnishing, corrosion, and discoloration
- Coordinates perfectly with other MAAX bathroom fixtures and accessories
- The linear design adds a luxurious and stylish element to your bathtub
- Quick-drying and easy to clean, preventing mold or mildew buildup
- Helps maintain water levels at a safe and desired level
- The installation requires silicone, no screws necessary
- Available in 5 finishes : White, Chrome, Brushed Nickel, Dark Bronze and Matte Black

LINEAR OVERFLOW METAL TRIM - 10037670

SKU	Color	Dimensions & Weight	Packaging	MSRP
10037670-002	White	3 3/4” x 1” x 0.438” / 0.07 lb	01 ft^3	$ 103
10037670-084	Chrome			$ 103
10037670-105	Brushed Nickel			$ 103
10037670-173	Dark Bronze			$ 103
10037670-340	Matte Black			$ 103

Medicine Cabinets & Sink

Element single view – medicine cabinet

Evia

Material : Acrylic

Features

- Made with acrylic reinforced with fiberglass making a strong and durable laundry sink
- Stain resistant material easy to clean making it the perfect fit for your laundry room or garage
- Soap dish and drip tray with recessed edge preventing water from dripping, keeping your area tidy and easy to clean
- Practical built-in wash board
- Drop-in fit for easy installation
- 14 1/2” deep for spacious working area

EVIA - 100898

SKU	Color	Dimensions & Weight	MSRP
100898-000-001-000	White	22” x 25” x 13.325” / 20 lb	$ 674

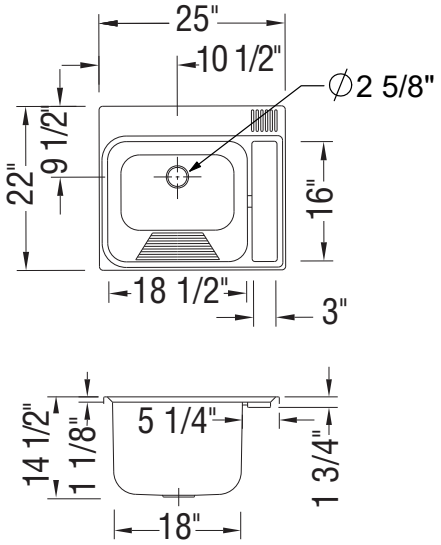

All dimensions are approximate. Structure measurements must be verified against the unit to ensure proper fit.

Features

- Exclusive slide shelf system, Slide Edge® and shock-absorbing strip
- Piano hinges or six-way adjustable 170° hinge
- Two (SVD2030) or three (SVD2436) adjustable glass shelves ¼" (6 mm) thick
- Mirror trim kit for surface mount included
- Reversible cabinet
- Rough wall opening: 14¼" x 25¼" x 3"

SVD2436 - 126549

SKU	Glass / Finish	Dimensions & Weight	Packaging	MSRP
126549-801-001-000	Beveled Edge / White	24" x 36" x 4 1/2" / 49 lb	5.47 ft^3	$ 1624

Element Bi-View

Features

- This MAAX ELEMENT medicine cabinet has a 24-inch width by 26-inch height with a 5-inch depth, has two pivoting panels and a classic 1/2-inch beveled edge and polished chrome base.
- All MAAX medicine cabinets are made of anodized aluminum, which provides great robustness. This feature gives you a cabinet that resists corrosion and will keep a smooth finish for many years.
- MAAX Slide Edge technology makes it easy to adjust shelves. This patented innovation lets you choose the height you need for the shelves while having a smooth surface that does'nt accumulate dust.
- The Smove soft closing mechanism is included with all MAAX medicine cabinets. This device acts as a real shock absorber while allowing the complete closing of the medicine cabinet door.
- Our revolutionary Smove system works like a stopper, which absorbs the shock of the door, while preventing it from closing abruptly, and then proceeds to complete the closing motion very gently.
- MAAX medicine cabinets have adjustable hinges including a clip fixing to allow the doors of the Bi-View models to be opened at 170 ° and easy access to the contents of the cabinet.

BV2426 - 124901

SKU	Glass / Finish	Dimensions & Weight	Packaging	MSRP
124901-801-084-000	Beveled Edge / Chrome	24” x 26” x 5” / 39 lb	5.17 ft^3	$ 1014

BV2430 - 126528

SKU	Glass / Finish	Dimensions & Weight	Packaging	MSRP
126528-801-084-000	Beveled Edge / Chrome	24” x 30” x 5” / 44 lb	4.79 ft^3	$ 1456

BV3030 - 126529

SKU	Glass / Finish	Dimensions & Weight	Packaging	MSRP
126529-801-084-000	Beveled Edge / Chrome	30” x 30” x 5” / 55 lb	5.94 ft^3	$ 1624

BV3630 - 126530

SKU	Glass / Finish	Dimensions & Weight	Packaging	MSRP
126530-801-084-000	Beveled Edge / Chrome	36” x 30” x 5” / 66 lb	78 ft^3	$ 1792

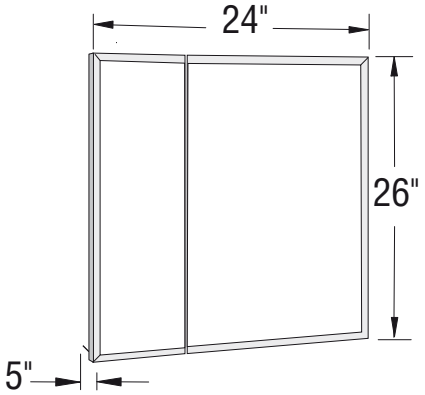

BV2426

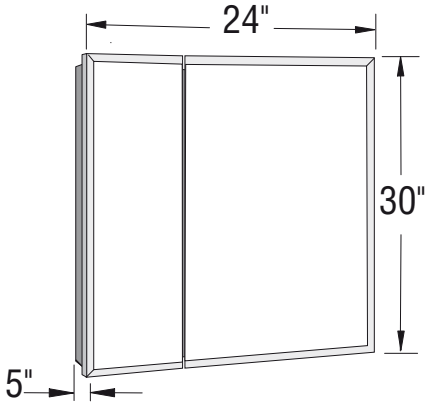

BV2430

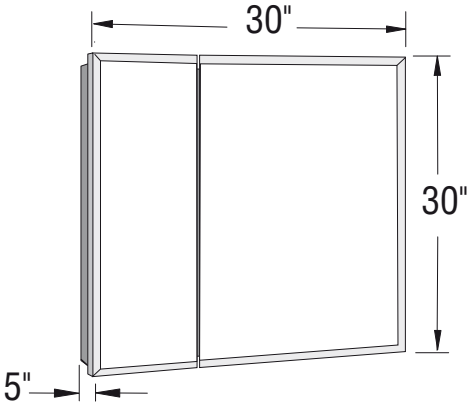

BV3030

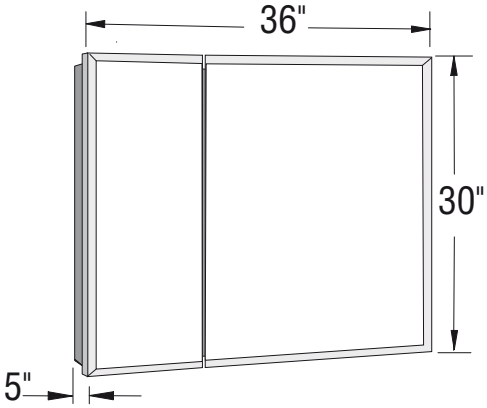

BV3630

All dimensions are approximate. Structure measurements must be verified against the unit to ensure proper fit

Element Single View

Features

- This MAAX ELEMENT medicine cabinet has a 18-inch width by 30-inch height with a 5-inch depth, has one pivoting panel and a classic 1/2-inch beveled edge and polished chrome base.
- All MAAX medicine cabinets are made of anodized aluminum, which provides great robustness. This feature gives you a cabinet that resists corrosion and will keep a smooth finish for many years.
- MAAX Slide Edge technology makes it easy to adjust shelves. This patented innovation lets you choose the height you need for the shelves while having a smooth surface that does'nt accumulate dust.
- The Smove soft closing mechanism is included with all MAAX medicine cabinets. This device acts as a real shock absorber while allowing the complete closing of the medicine cabinet door.
- Our revolutionary Smove system works like a stopper, which absorbs the shock of the door, while preventing it from closing abruptly, and then proceeds to complete the closing motion very gently.
- MAAX medicine cabinets have adjustable hinges including a clip fixing to allow the door of the Single View models to be opened at 170 ° and easy access to the contents of the cabinet.

SV1830 - 124903

SKU	Glass / Finish	Dimensions & Weight	Packaging	MSRP
124903-800-084-000	Pencil Edge / Chrome	18” x 30” x 5” / 36 lb	4.18 ft^3	$ 1014
124903-801-084-000	Beveled Edge / Chrome			$ 1032

SV1636 - 124905

SKU	Glass / Finish	Dimensions & Weight	Packaging	MSRP
124905-801-084-000	Beveled Edge / Chrome	16” x 36” x 5” / 40 lb	6.1 ft^3	$ 903

SV1230 - 126521

SKU	Glass / Finish	Dimensions & Weight	Packaging	MSRP
126521-801-084-000	Chrome	12” x 30” x 5” / 21 lb	3.67 ft^3	$ 903

SV1530 - 126522

SKU	Glass / Finish	Dimensions & Weight	Packaging	MSRP
126522-800-084-000	Pencil Edge / Chrome	15” x 30” x 5” / 34 lb	3.17 ft^3	$ 944
126522-801-084-000	Beveled Edge / Chrome			$ 967

SV2030 - 126524

SKU	Glass / Finish	Dimensions & Weight	Packaging	MSRP
126524-800-084-000	Pencil Edge / Chrome	20” x 30” x 5” / 38 lb	4.18 ft^3	$ 1065
126524-801-084-000	Beveled Edge / Chrome			$ 1089

SV2430 - 126526

SKU	Glass / Finish	Dimensions & Weight	Packaging	MSRP
126526-800-084-000	Pencil Edge / Chrome	24” x 30” x 5” / 41 lb	4.56 ft^3	$ 1236
126526-801-084-000	Beveled Edge / Chrome			$ 1270

Beveled Mirrors

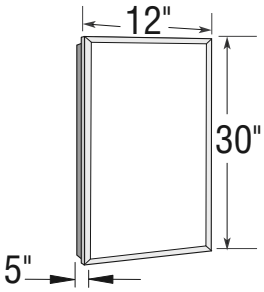

SV1230

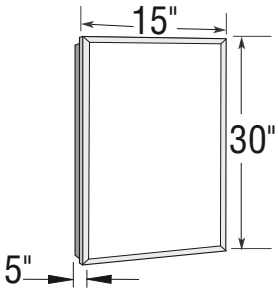

SV1530

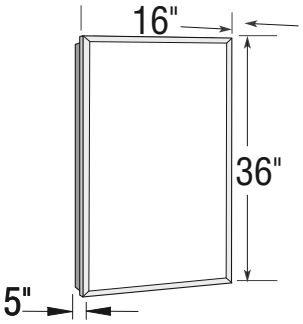

SV1636

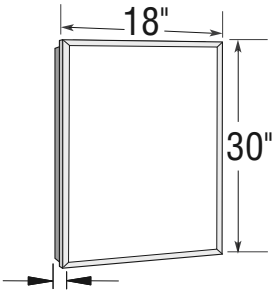

SV1830

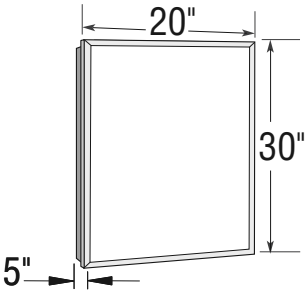

SV2030

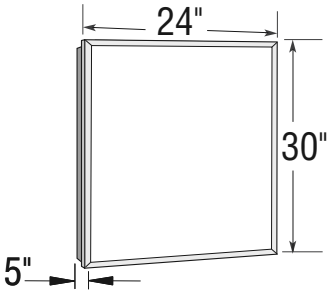

SV2430

Pencil Edge Mirrors

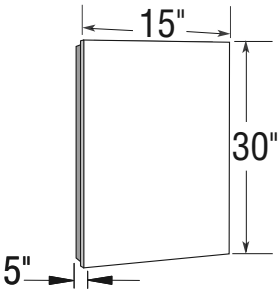

SV1530

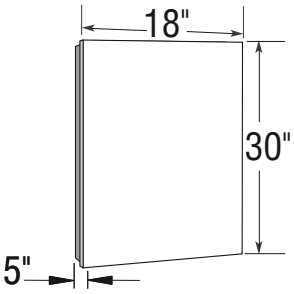

SV1830

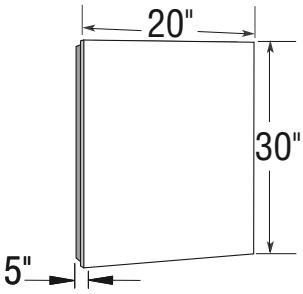

SV2030

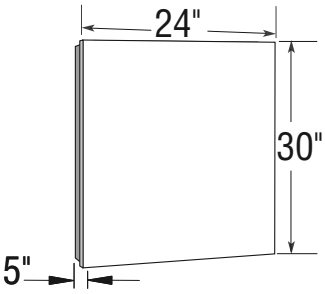

SV2430

All dimensions are approximate. Structure measurements must be verified against the unit to ensure proper fit

Element Tri-View

Features

- Proudly made in Canada
- This MAAX ELEMENT medicine cabinet has a 30-inch width by 31-inch height with a 5-inch depth, has three pivoting panels and a classic 1/2-inch beveled edge and polished chrome base.
- All MAAX medicine cabinets are made of anodized aluminum, which provides great robustness. This feature gives you a cabinet that resists corrosion and will keep a smooth finish for many years.
- MAAX Slide Edge technology makes it easy to adjust shelves. This patented innovation lets you choose the height you need for the shelves while having a smooth surface that does'nt accumulate dust.
- The Smove soft closing mechanism is included with all MAAX medicine cabinets. This device acts as a real shock absorber while allowing the complete closing of the medicine cabinet door.
- Our revolutionary Smove system works like a stopper, which absorbs the shock of the door, while preventing it from closing abruptly, and then proceeds to complete the closing motion very gently.
- MAAX medicine cabinets have adjustable hinges including a clip fixing to allow the doors of the Tri-View models to be opened at 170 ° and easy access to the contents of the cabinet.

TV3031 - 126531

SKU	Glass / Finish	Dimensions & Weight	Packaging	MSRP
126531-801-084-000	Beveled Edge / Chrome	30” x 31” x 5” / 68 lb	5 ft^3	$ 1571

TV3631 - 126532

SKU	Glass / Finish	Dimensions & Weight	Packaging	MSRP
126532-801-084-000	Beveled Edge / Chrome	36” x 31” x 5” / 83 lb	6 ft^3	$ 1734

TV4831 - 126533

SKU	Glass / Finish	Dimensions & Weight	Packaging	MSRP
126533-801-084-000	Beveled Edge / Chrome	48” x 31” x 5” / 102 lb	8 ft^3	$ 2069

FOOTNOTES

No	Description
R	

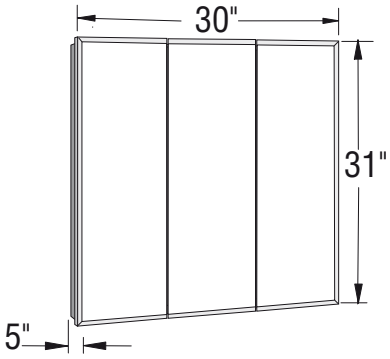

TV3031

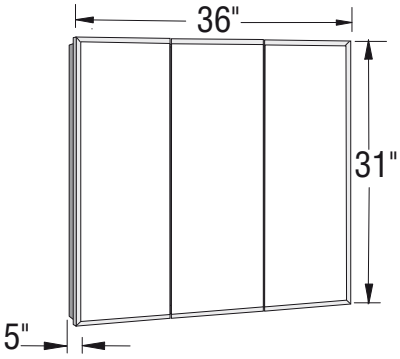

TV3631

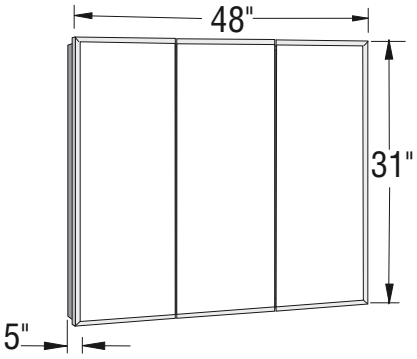

TV4831

All dimensions are approximate. Structure measurements must be verified against the unit to ensure proper fit

Made with Pagination.com

MAAX®

Enjoy the experience

For any questions or comments, please contact info@maax.com

1-877-GET-MAAX
(1-877-438-6229)

Order processing

Eastern Canada
saccanada@maax.com

Western Canada
customercare.bellingham@maax.com

Technical Services

Bathtubs, Tub Showers and Showers
bsav@maax.com

Doors, Shower Kits and Medicine Cabinets
lsav@maax.com

www.**maax**.ca

MAAX is a proud member of the ABG family — **Building a better bathware industry**

10053758 CA0322-01