BASE MODEL

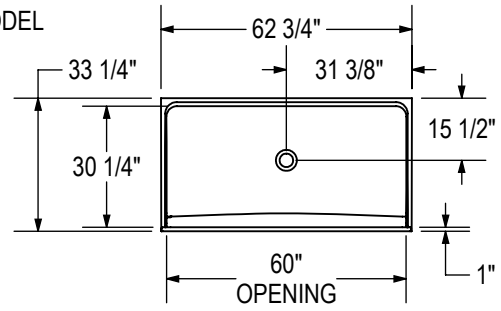

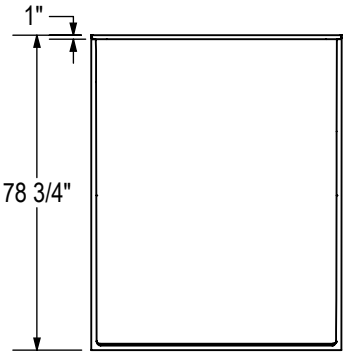

THRESHOLD DETAIL

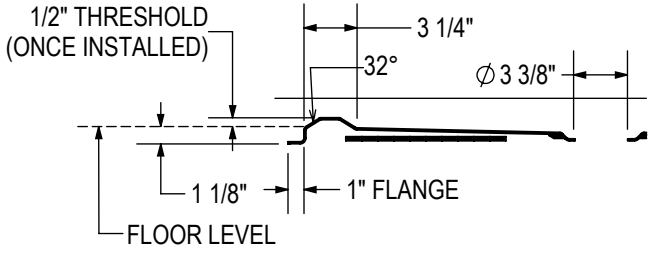

REINFORCEMENT BACKING

RIGHT WALL SHOWN
LEFT WALL SYMMETRICAL

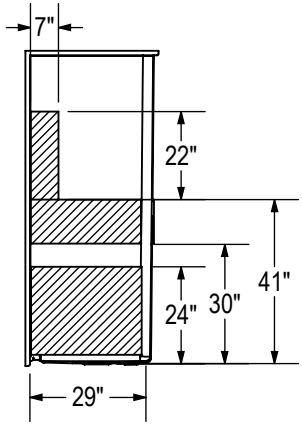

BACK WALL

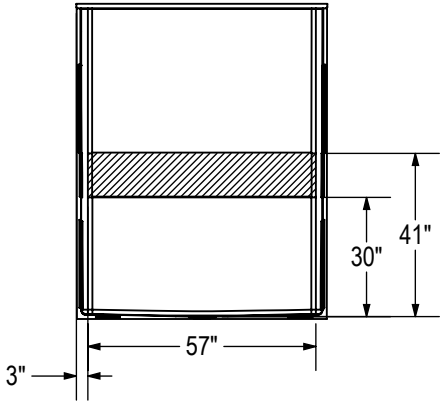

All dimensions are approximate. Structure measurements must be verified against the unit to ensure proper fit.

BASE MODEL

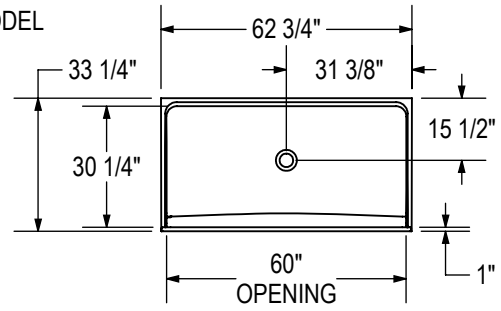

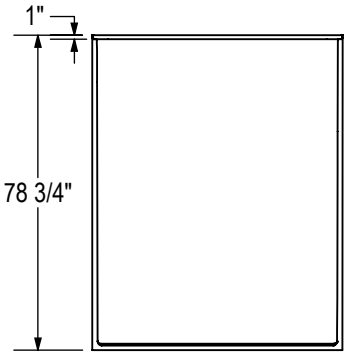

THRESHOLD DETAIL

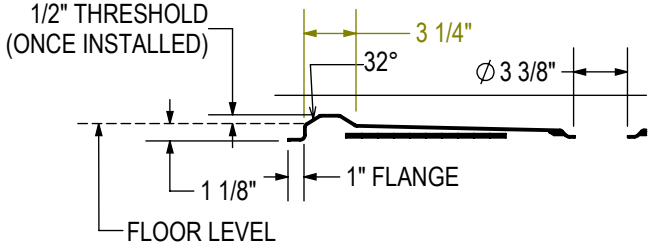

REINFORCEMENT FULL BACKING

RIGHT WALL SHOWN
LEFT WALL SYMMETRICAL

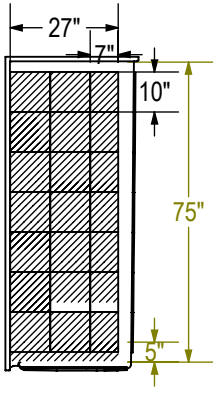

BACK WALL

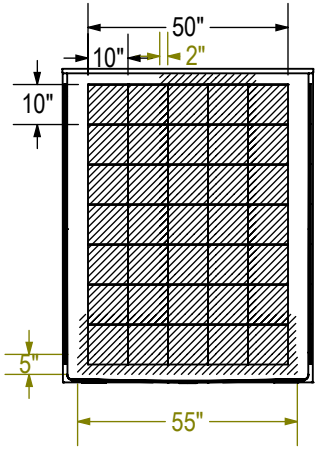

All dimensions are approximate. Structure measurements must be verified against the unit to ensure proper fit.