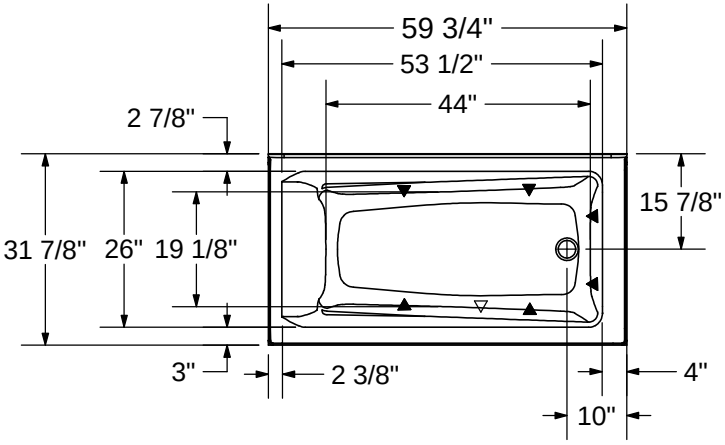

1" Single Integrated tiling flange (shown)
2" Double Integrated tiling flange (not shown)
Drop-in model (Shown)

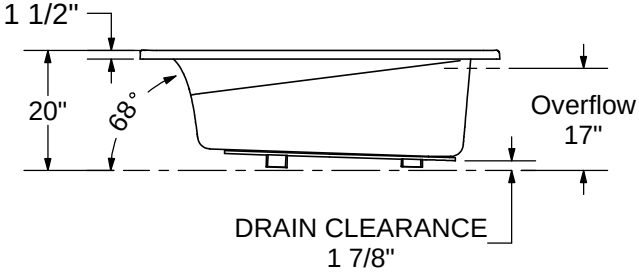

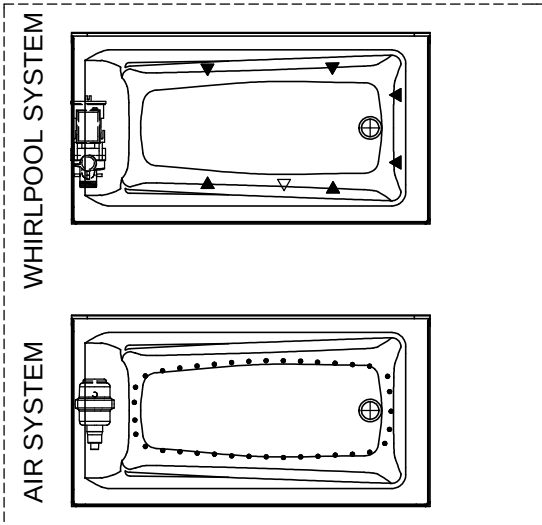

(▲) : Indicates whirlpool jets positioning
(▼) : Indicates suction positioning
(●) : Indicates airjets positioning

Wood support design may vary.
Single Integrated tiling flange: 1" height x 1/4" thickness (shown)
Double Integrated tiling flange: 2" height (not shown)

All dimensions are approximate.
Structure measurement must be verified against the unit to ensure proper fit.