BASE MODEL WITH ADA L-SHAPED GRAB BAR & SEAT PACKAGE
RIGHT SIDE SHOWN

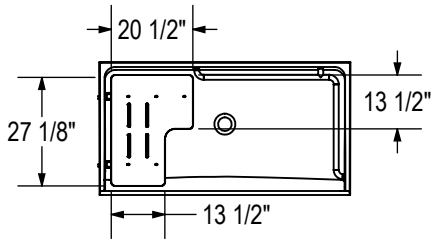


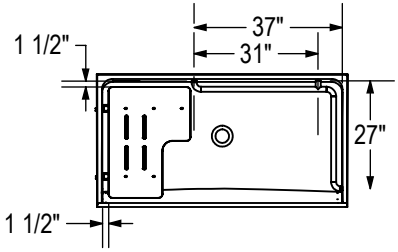


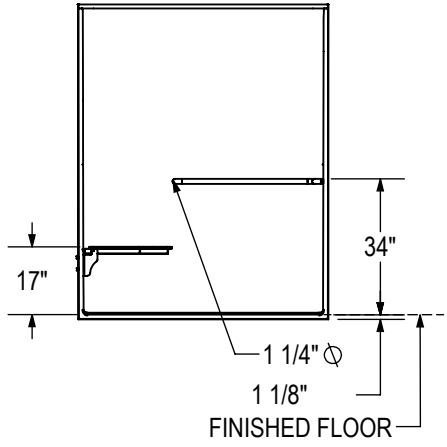


**All dimensions are approximate. Structure measurements must be verified against the unit to ensure proper fit.**