BASE MODEL WITH ANSI - L-SHAPED GRAB BAR PACKAGE
LEFT SIDE SHOWN

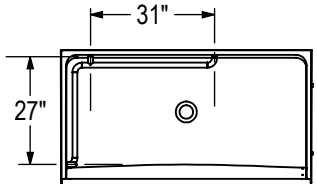

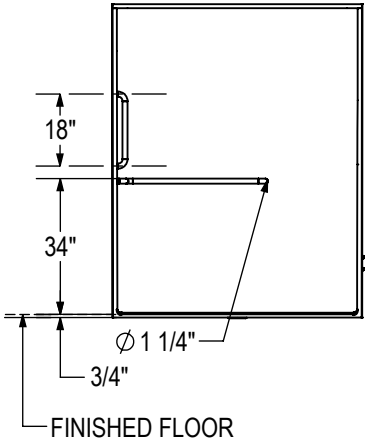

All dimensions are approximate. Structure measurements must be verified against the unit to ensure proper fit.