BASE MODEL WITH ANSI L-SHAPED GRAB BAR & SEAT PACKAGE
LEFT SIDE SHOWN

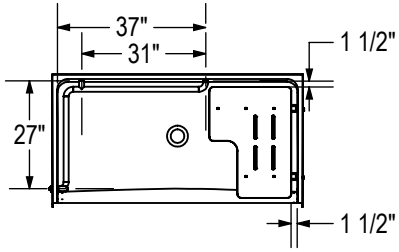


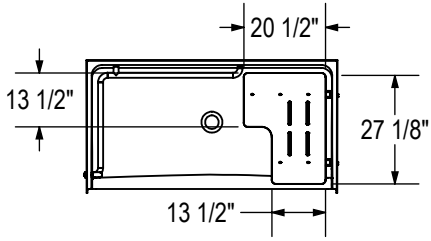


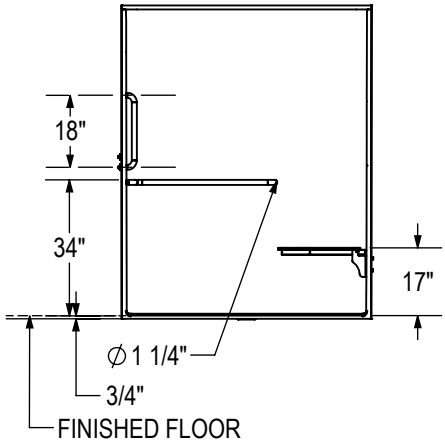


**All dimensions are approximate. Structure measurements must be verified against the unit to ensure proper fit.**