BASE MODEL ANSI L-SHAPED GRAB BAR & SEAT
RIGHT SIDE SHOWN

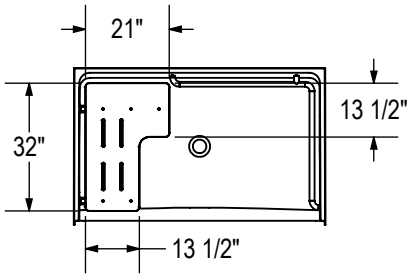

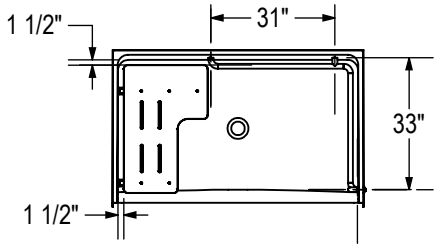

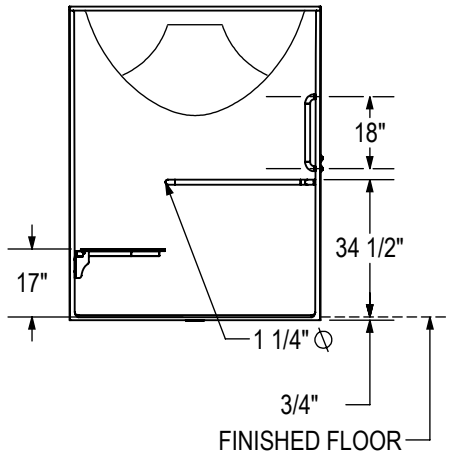

All dimensions are approximate. Structure measurements must be verified against the unit to ensure proper fit.