BASE MODEL WITH COMPLETE MASS PACKAGE
RIGHT SIDE SHOWN

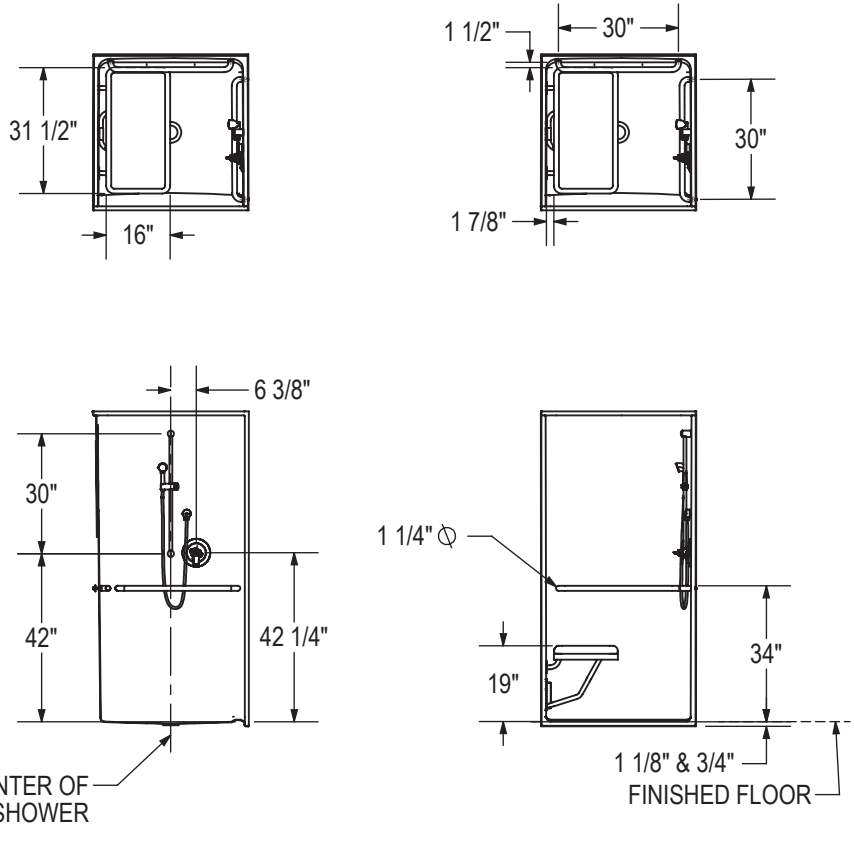

All dimensions are approximate. Structure measurements must be verified against the unit to ensure proper fit.