BASE MODEL WITH COMPLETE ADA PACKAGE
LEFT SIDE SHOWN

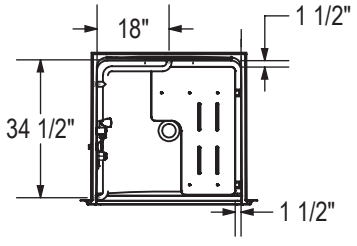

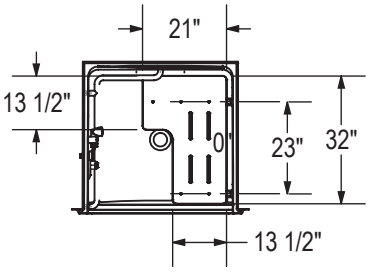

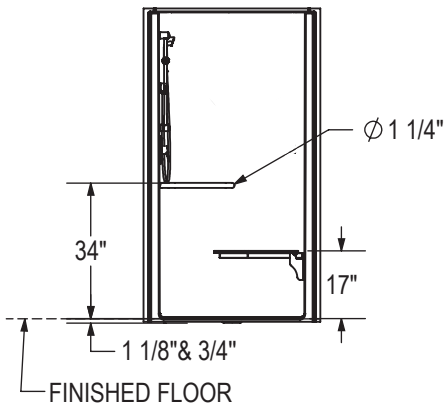

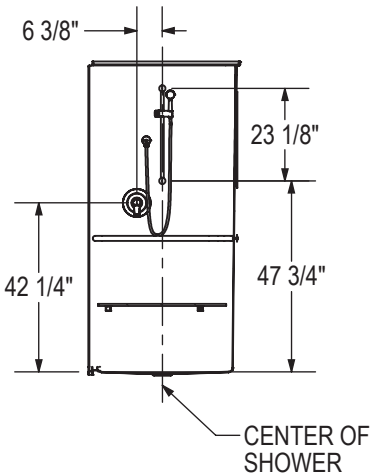

All dimensions are approximate. Structure measurements must be verified against the unit to ensure proper fit.