BASE MODEL WITH MASS GRAB BAR & SEAT PACKAGE
LEFT SIDE SHOWN

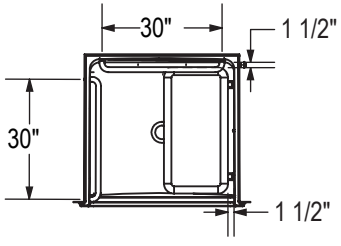

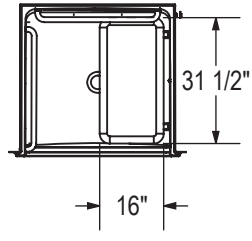

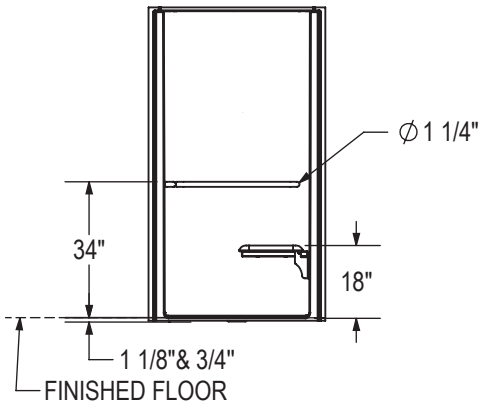

All dimensions are approximate. Structure measurements must be verified against the unit to ensure proper fit.