BASE MODEL WITH ANSI GRAB BAR PACKAGE
RIGHT SIDE SHOWN

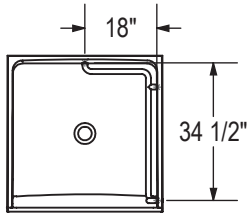

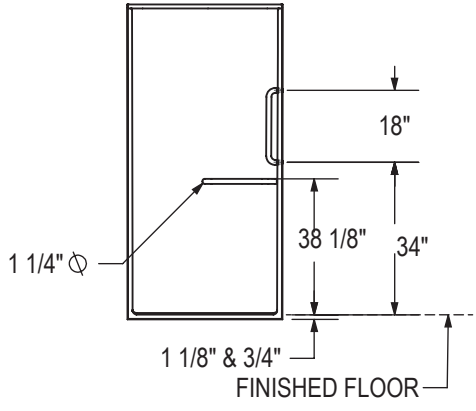

All dimensions are approximate. Structure measurements must be verified against the unit to ensure proper fit.