MAIDSTONE

www.MaidstoneSupply.com

Acrylic Contemporary Tub

Part No: 220TR67F6_Spec

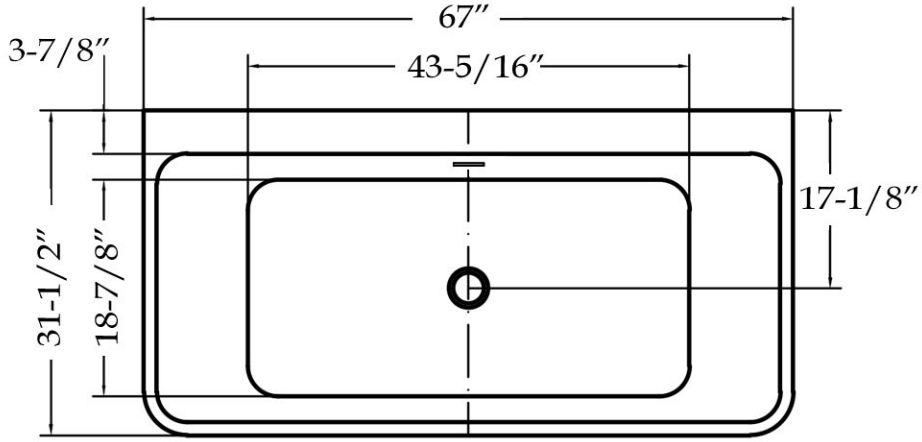

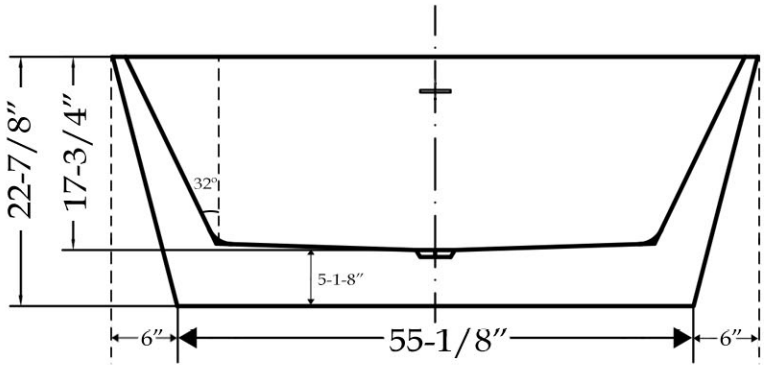

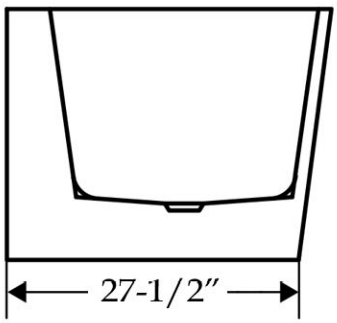

Volume: 62 gal Weight: 106 lbs

Contact Maidstone for additional information and specifictaions. For complete warranty information and a list of dealers visit www.MaidstoneSupply.com. All products and specifications are subject to change without notice. Maidstone is not responsible for typographical and/or dimensional errors. Typographical errors are subject to correction.

Note: Rough-in dimensions may vary +/- 1/2″ and are subject to change. No responsibility is assumed by Maidstone.

MAIDSTONE

www.MaidstoneSupply.com

Contemporary Rim Mount Tub Faucet

Part No: 220TR67F6_Spec

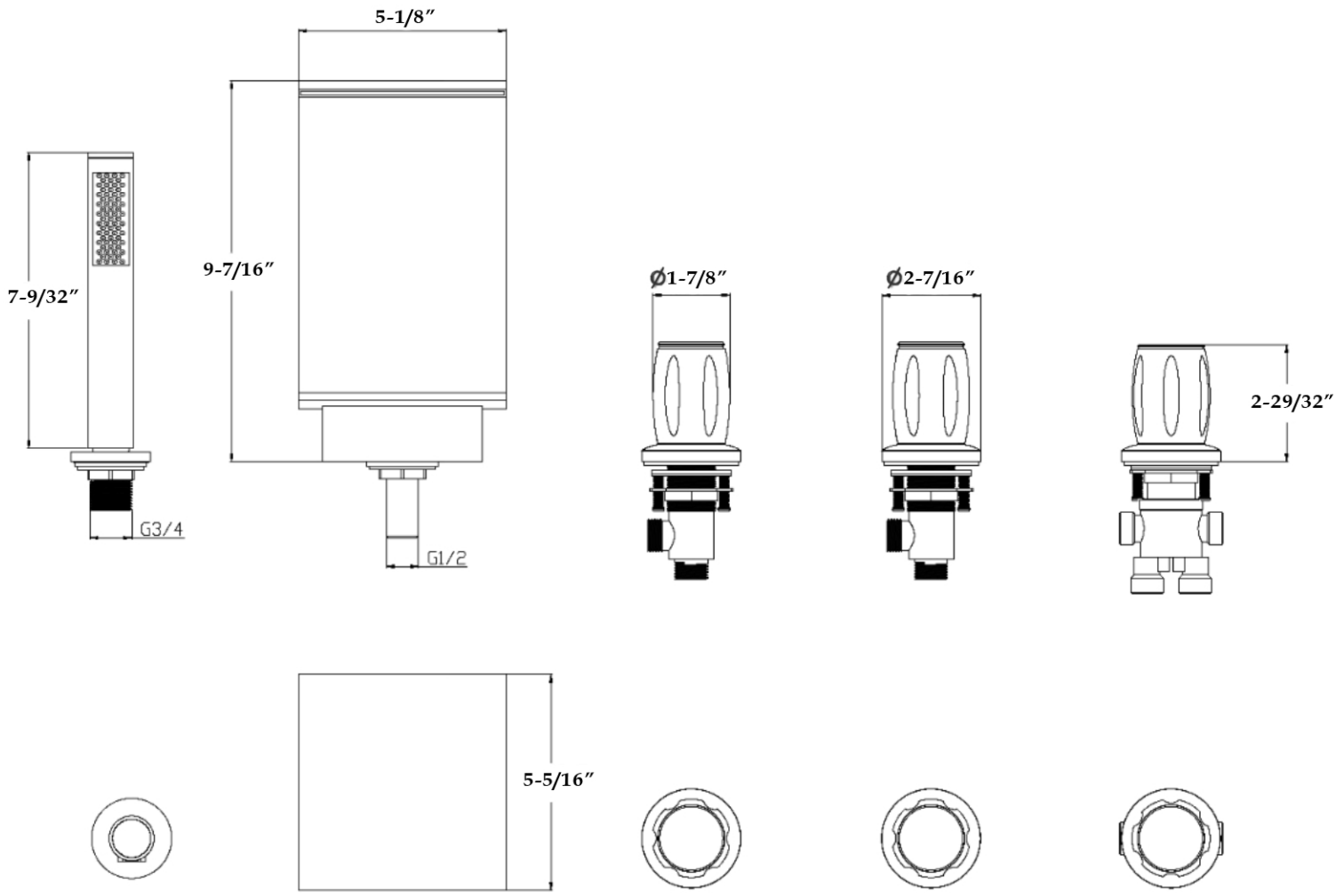

Contact Maidstone for additional information and specifictaions. For complete warranty information and a list of dealers visit www.MaidstoneSupply.com. All products and specifications are subject to change without notice. Maidstone is not responsible for typographical and/or dimensional errors. Typographical errors are subject to correction.

Note: Rough-in dimensions may vary +/- 1/2″ and are subject to change. No responsibility is assumed by Maidstone.