MAIDSTONE

www.MaidstoneSupply.com

Exposed Pipe Showers

Part No: 141-W18-RS1

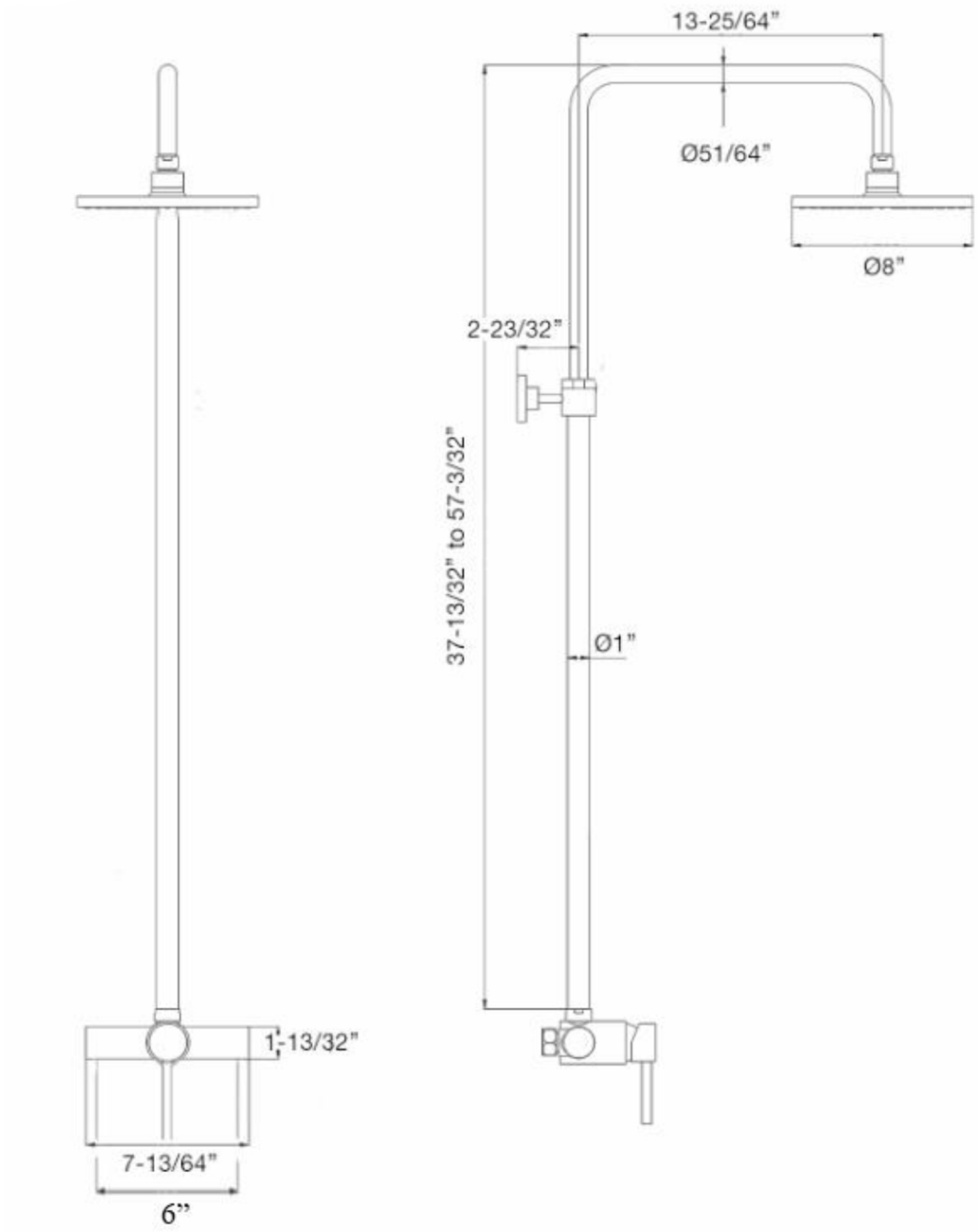

Contact Maidstone for additional information and specifictaions. For complete warranty information and a list of dealers visit www.MaidstoneSupply.com. All products and specifications are subject to change without notice. Maidstone is not responsible for typographical and/or dimensional errors. Typographical errors are subject to correction.

Note: Rough-in dimensions may vary +/- 1/2" and are subject to change. No responsibility is assumed by Maidstone.