ICON

48” x 36” x 78 1/2” Shower

OPTIONS

COLOR	CONFIGURATION
White	Center Drain / No Seat

FEATURES

- Made of AcrylX™ applied acrylic for improved durability
- Slip-resistant textured bottom for additional safety
- Available with and without an Above-the-Floor Rough (AFR) configuration

ATTRIBUTES

- Installation Type : Alcove
- Above-the-Floor Rough : Yes
- Material : AcrylX™
- Number of Pieces : One
- Residential Warranty : Lifetime

MAAX®

DRAWING

48” x 36” x 78 1/2” Shower

BASE MODEL
Center Drain Shown

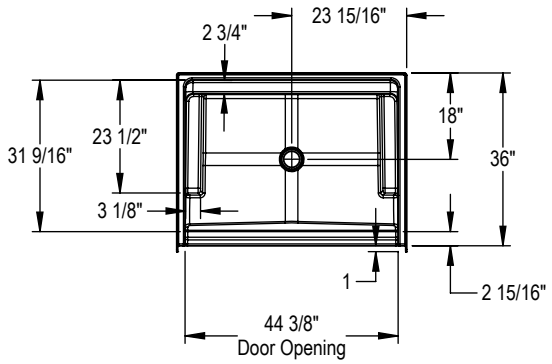

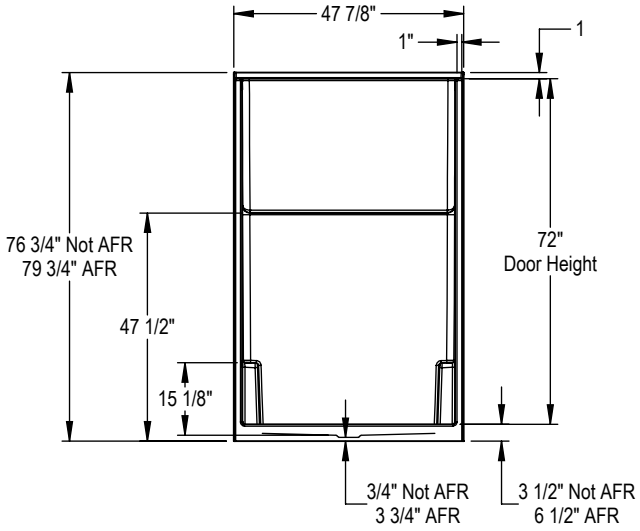

All dimensions are approximate. Structure measurements must be verified against the unit to ensure proper fit.

REINFORCEMENT OPTION
Left Wall Shown, Symmetrical for Right

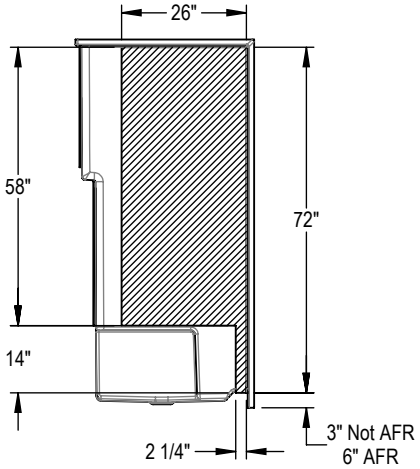

REINFORCEMENT OPTION
Back Wall Shown

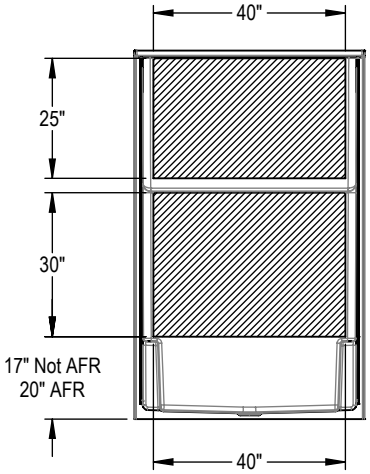

DRAWING

48” x 36” x 78 1/2” Shower

BASE MODEL OPTION
Center Drain Model Shown

OPT. 12" Modern horizontal straight grab bar

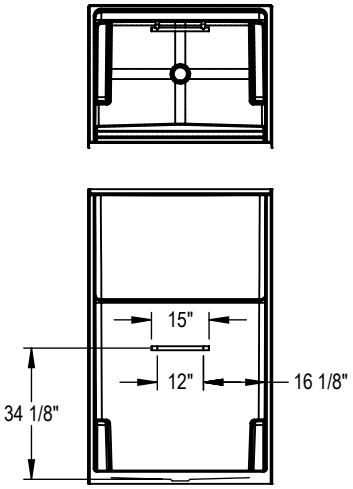

OPT. 23" curved grab bar (right-hand shown)

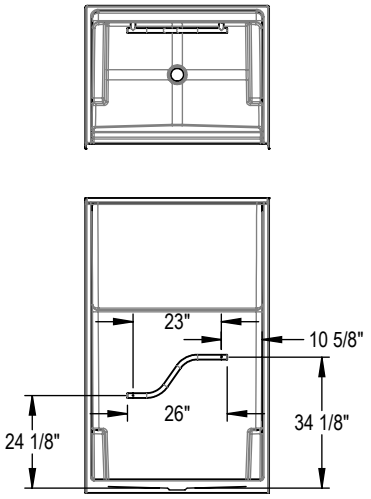

OPT. 18" Modern straight grab bar

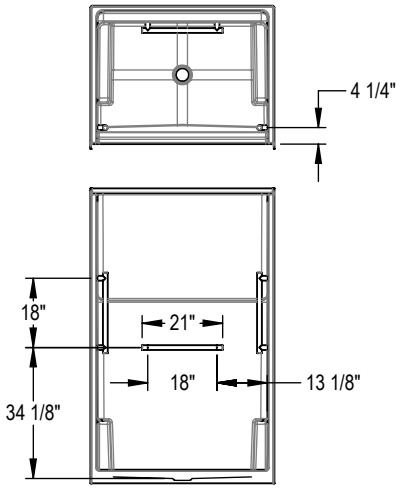

OPT. 24" Modern straight grab bar

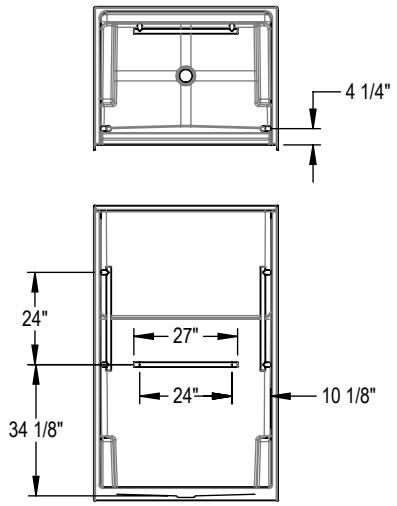

All dimensions are approximate. Structure measurements must be verified against the unit to ensure proper fit.

TECHNICAL SPECIFICATIONS

MAAX®

48” x 36” x 78 1/2” Shower

DIMENSIONS

PRODUCT LENGTH	INTERIOR LENGTH	PRODUCT WIDTH	INTERIOR WIDTH	PRODUCT HEIGHT
48”	44 1/2”	36”	34 5/8”	78 1/2”
INTERIOR HEIGHT	**THRESHOLD HEIGHT**	**THRESHOLD WIDTH**	**WEIGHT**	**DRAIN SIZE**
74 3/4”	6 1/2”	3”	126 Lbs	3 3/8”
DRAIN CLEARANCE	**SHIPPING LENGTH**	**SHIPPING WIDTH**	**SHIPPING HEIGHT**	
3 3/4”	48”	37 1/4”	79 3/4”	

Project:

Contractor:

Representative:

Date:

Tel:

Notes: