CAMELIA SHR

60” x 33 1/4” x 88” Shower

OPTIONS

CONFIGURATION	COLOR
Center Drain / Left Seat	White
Center Drain / Left and Right Seat	
Center Drain / No Seat	
Center Drain / Right Seat	
Left Drain / No Seat	
Left Drain / Right Seat	
Right Drain / Left Seat	
Right Drain / No Seat	

FEATURES

- Thermoformed cast acrylic for improved durability
- Smooth walls for a modern and minimalist look
- Right, left or center drain
- 1-piece construction for reliable water containment
- Compatible with a wide range of MAAX Products

ATTRIBUTES

- Installation Type : Alcove
- Above-the-Floor Rough : No
- Material : Acrylic
- Number of Pieces : One
- Residential Warranty : 25 Years

MAAX®

DRAWING

60” x 33 1/4” x 88” Shower

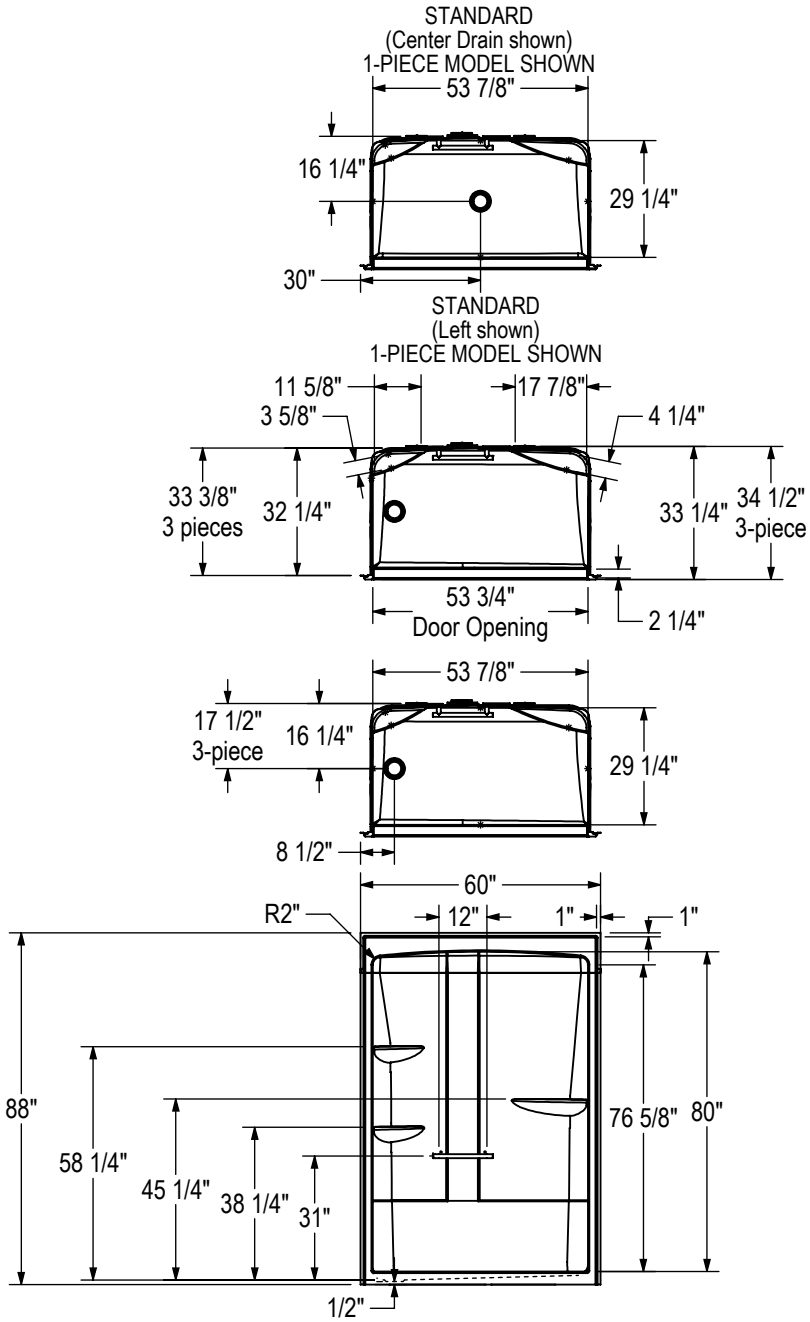

All dimensions are approximate. Structure measurements must be verified against the unit to ensure proper fit.

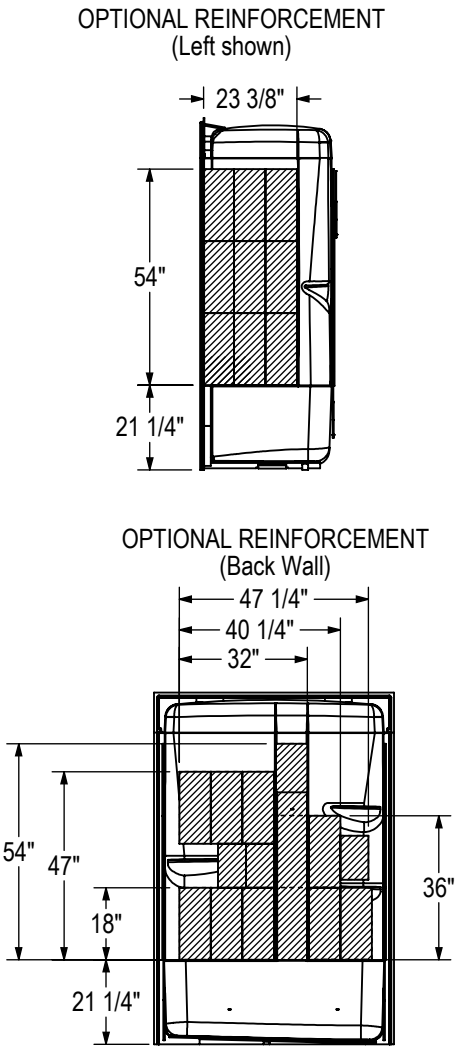

DRAWING

60” x 33 1/4” x 88” Shower

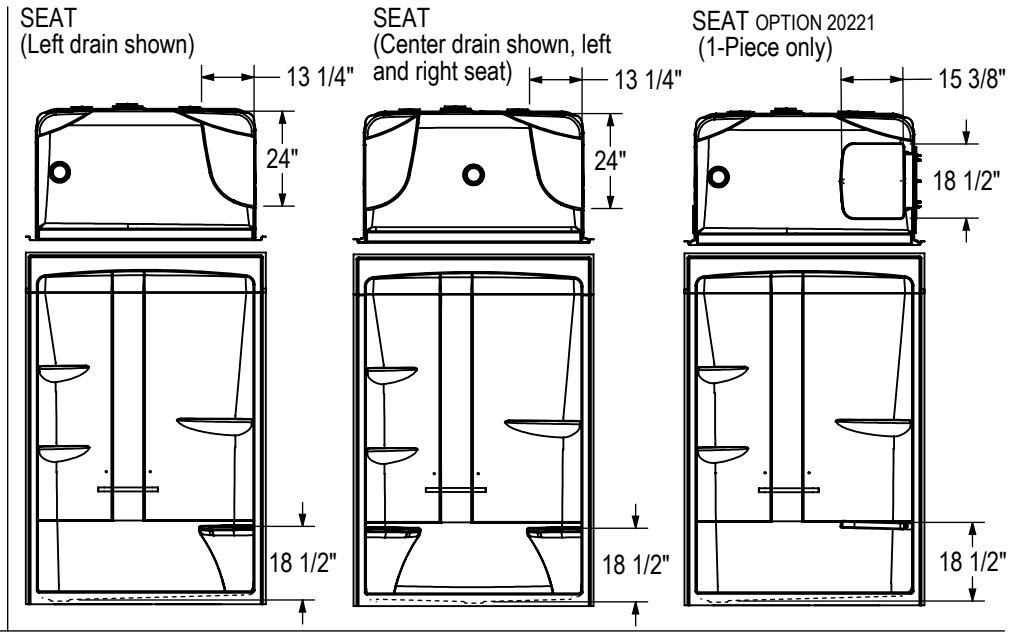

GRAB BAR
(Left shown)

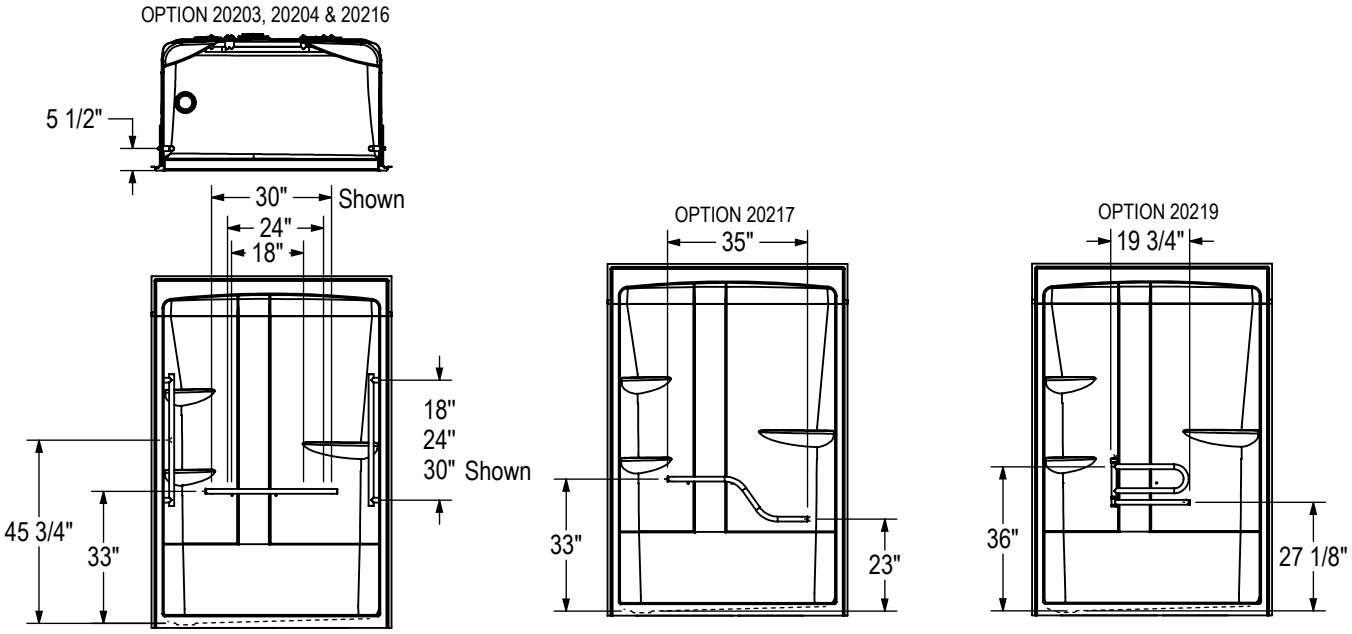

All dimensions are approximate. Structure measurements must be verified against the unit to ensure proper fit.

TECHNICAL SPECIFICATIONS

MAAX®

60” x 33 1/4” x 88” Shower

DIMENSIONS

PRODUCT LENGTH	INTERIOR LENGTH	PRODUCT WIDTH	INTERIOR WIDTH	PRODUCT HEIGHT
60”	53 7/8”	33 1/4”	29 1/4”	88”
INTERIOR HEIGHT	**THRESHOLD HEIGHT**	**THRESHOLD WIDTH**	**WEIGHT**	**DRAIN SIZE**
84 3/4”	3 1/4”	2 1/4”	159 Lbs	3 1/4”
DRAIN CLEARANCE	**SHIPPING LENGTH**	**SHIPPING WIDTH**	**SHIPPING HEIGHT**	
1/2”	61”	33 3/4”	88 1/2”	

Project:

Contractor:

Representative:

Date:

Tel:

Notes: