ALLIA SHR

48” x 34 1/2” x 88” Shower

OPTIONS

CONFIGURATION	COLOR
Center Drain / Left Seat	White
Center Drain / No Seat	
Center Drain / Right Seat	

FEATURES

- Thermoformed cast acrylic for improved durability
- Smooth walls for a modern and minimalist look
- Center drain
- 3-piece construction for easy handling and installation
- Compatible with a wide range of MAAX Products

ATTRIBUTES

- Installation Type : Alcove
- Above-the-Floor Rough : No
- Material : Acrylic
- Number of Pieces : Three
- Residential Warranty : 25 Years

MAAX®

DRAWING

48” x 34 1/2” x 88” Shower

STANDARD
1-PIECE MODEL SHOWN

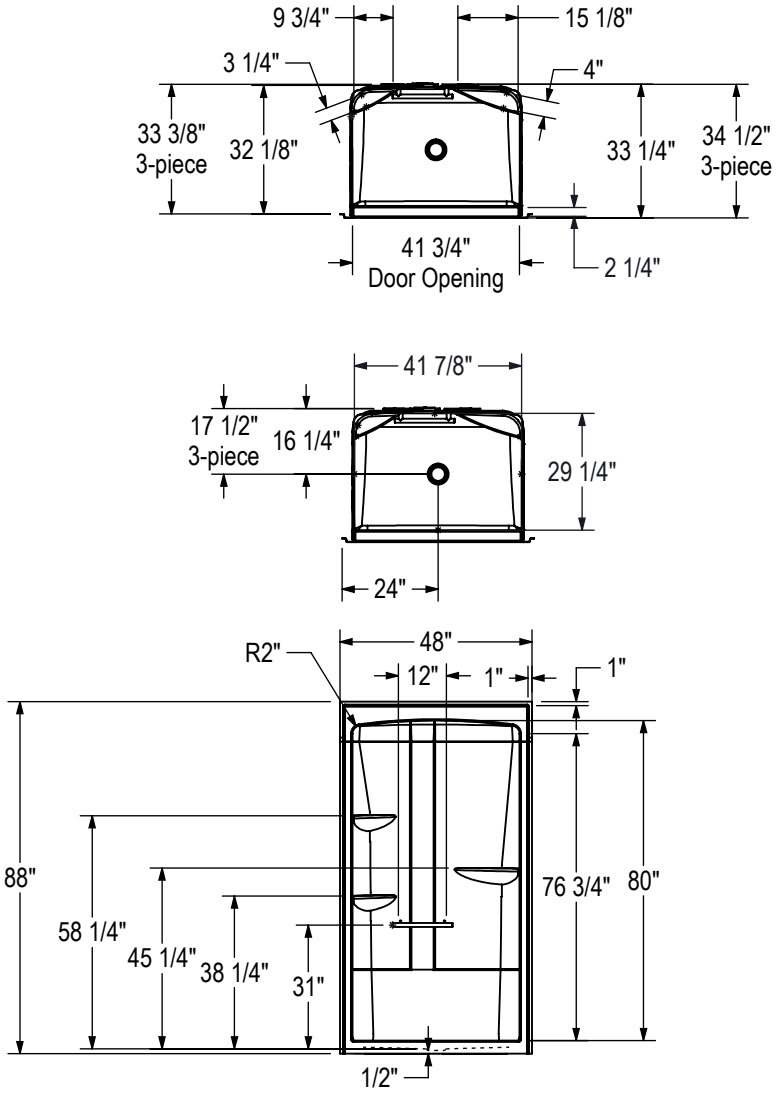

All dimensions are approximate. Structure measurements must be verified against the unit to ensure proper fit.

OPTIONAL REINFORCEMENT
(Left shown)

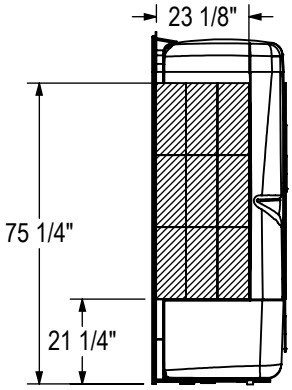

OPTIONAL REINFORCEMENT
(Back Wall)

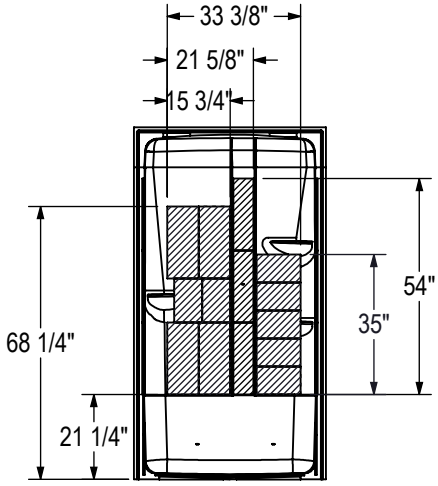

DRAWING

48” x 34 1/2” x 88” Shower

SEAT
(Right shown)

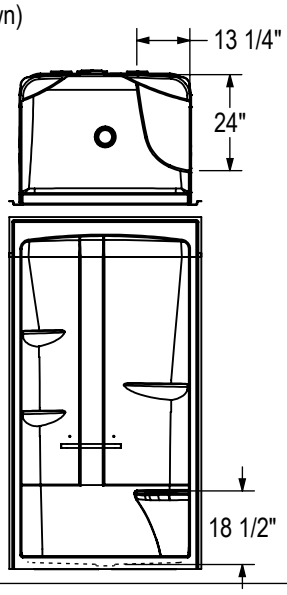

SEAT
OPTION 20221
(1-Piece only)

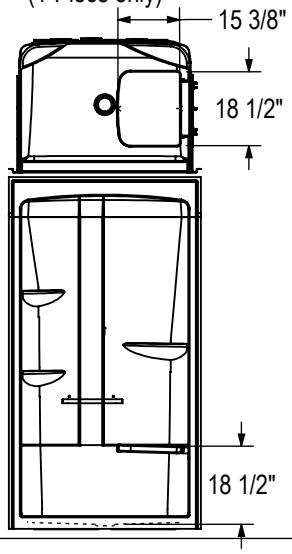

GRAB BAR
(Left shown)

OPTION 20203 & 20204

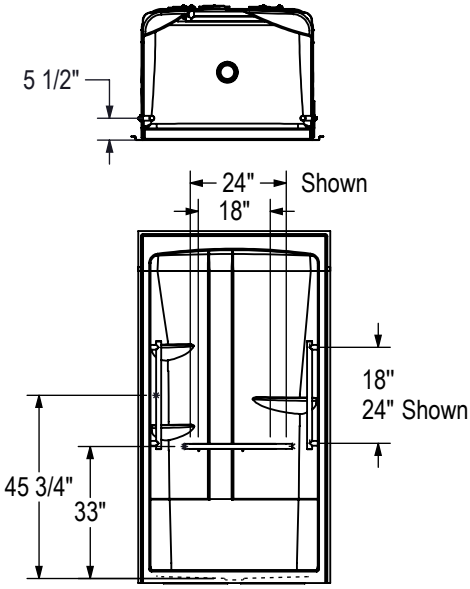

OPTION 20218

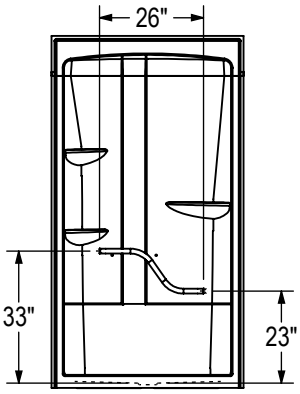

OPTION 20219

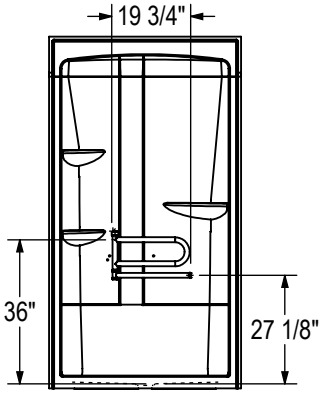

All dimensions are approximate. Structure measurements must be verified against the unit to ensure proper fit.

TECHNICAL SPECIFICATIONS

MAAX®

48” x 34 1/2” x 88” Shower

DIMENSIONS

PRODUCT LENGTH	INTERIOR LENGTH	PRODUCT WIDTH	INTERIOR WIDTH	PRODUCT HEIGHT
48”	41 7/8”	34 1/2”	29 1/4”	88”
INTERIOR HEIGHT	**THRESHOLD HEIGHT**	**THRESHOLD WIDTH**	**WEIGHT**	**SHIPPING LENGTH**
84 3/4”	3 1/4”	2 1/4”	144 Lbs	49”
SHIPPING WIDTH	**SHIPPING HEIGHT**			
35”	88 1/2”			

Project:

Contractor:

Representative:

Date:

Tel:

Notes: