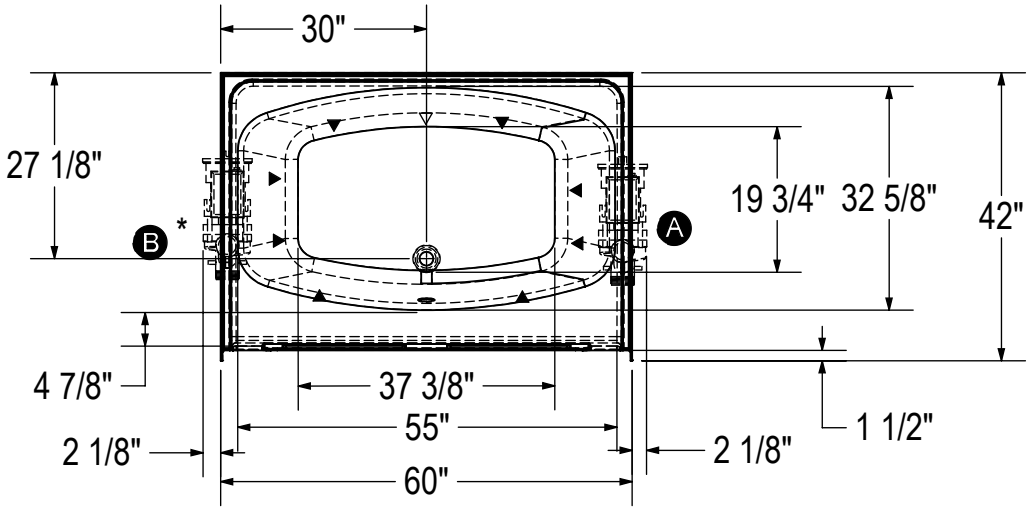

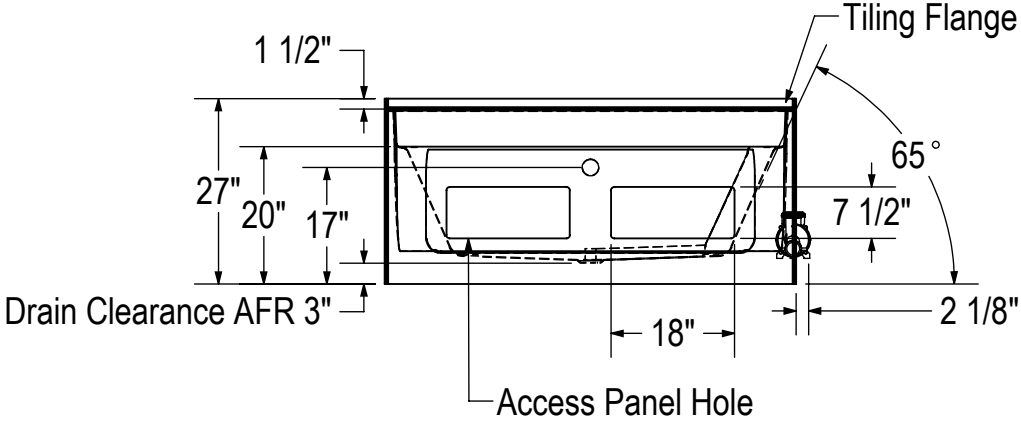

Ⓐ : Indicate standard pump location
Ⓑ : Indicate optional pump location *(must order Option in price guide)
(▲): Indicates whirpool jet positioning
(▽): Indicates suction positioning
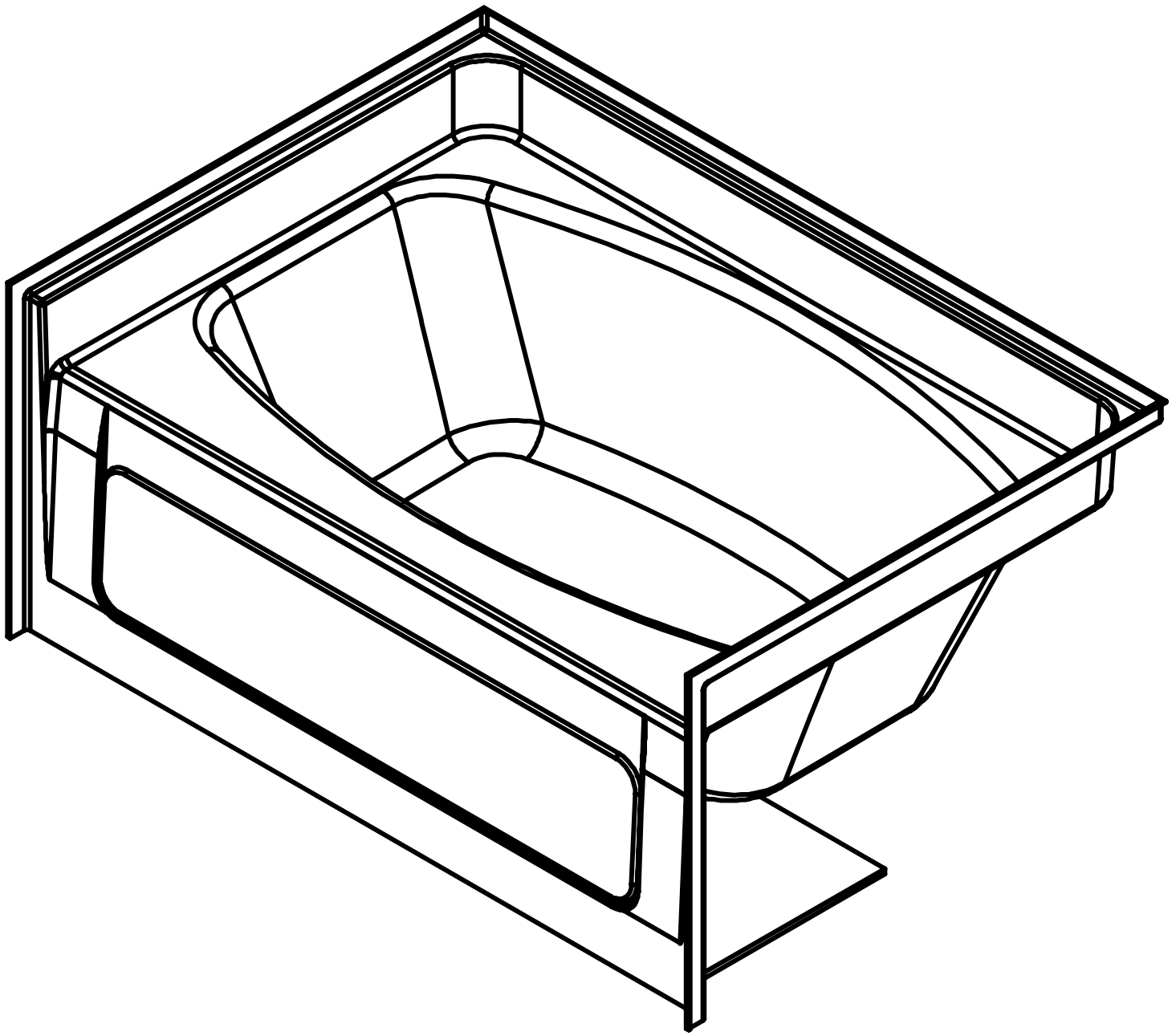
All dimensions are approximate. Structure measurements must be verified against the unit to ensure proper fit.