Viper®
1.6 gpf (6.0 Lpf)
ErgoHeight™ ADA Elongated Toilet

Features:

GVP21518

Included Components:

- ☐ Combination GVP21518
  - ☐ Bowl GVP21528
  - ☐ Tank GVP28590

- Vitreous China
- 12″ Rough-in
- 3″ flush valve for maximum water force
- Fluidmaster® 400A Fill Valve
- Corrosion resistant flapper
- Extra-Large Dual fed siphon jets for high power bowl
- 100% glazed, 2″ trapway
- Double nut, multi-point tank-to-bowl mounting system for tool-free installation
- Color matched metal tank lever
- Toilet seat is not included

Technical Information:

Configuration	Two-piece, ErgoHeight™ ADA Elongated Toilet
Water per Flush	1.6 GPF (6.0 LPF)
Rough-In	12″
Height	30 7/8″
Width	17 1/2″
Depth	29 3/16″
Trapway	2″
Large Water Surface	8 11/16″ x 6 5/16″
Shipping weight Bowl	52 lbs
Shipping weight Tank	30.1 lbs

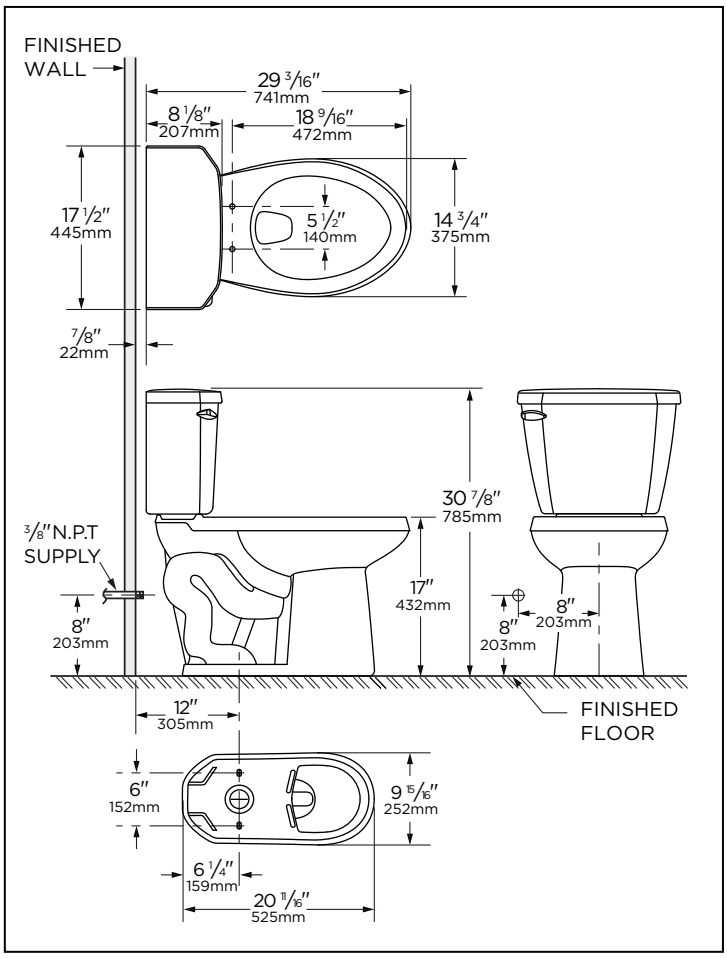

Accessories: (To be purchased separately)

- Slow Close Toilet Seat G0099213
- Non-Slow Close Toilet Seat G0099216

Other Tank Options: (To be purchased separately)

- Insulated Tank GVP28592
- Tank with Right Hand Lever GVP2859097
- Insulated Tank with Lid Locking Device GVP28592LL

Available Colors:

- White
- Other: Refer to Price Book for additional colors/finishes

Warranty:

- Limited Lifetime on Vitreous China, refer to the website for more details.

NOTES: All dimensions are in inches and milimeters. Illustrations may not be drawn to scale.

IMPORTANT:
Dimensions of fixtures are nominal and may vary within the range of tolerances established by ASME standard A 112.19.2
THIS FIXTURE QUALIFIES ACCORDING TO ASME TEST PROCEDURES AS A LOW CONSUMPTION WATER CLOSET WITH AN AVERAGE CONSUMPTION OF 1.6 gpf (6 Lpf) OR LESS.

Because we are committed to continual product improvement, specifications are subject to change without notice. 05/20

© 2020 Gerber Plumbing Fixtures LLC. All rights reserved gerber-us.com gerber-ca.com