GERBER

www.gerberonline.com

Maxwell Dual Flush 1.1/1.6 GPF Elongated Toilet

12 ″ Rough-In

Features:

☐ DF-21-912

- Vitreous China
- Combination bowl and tank
- Dual Flush 1.1/1.6 gpf (4.0/6.0 Lpf) High efficiency toilet (HET)
- Elongated bowl
- Syphonic flush action cleans the bowl and prevents splashing
- Top mounted, two-button actuator
- 2″ fully glazed trapway for effective waste removal
- Available in White, Biscuit and Bone
- Color matched bolt caps included
- Toilet seat not included

Technical Information:

Included Components:

☐ Combination DF-21-912
- ☐ Bowl 21-962
- ☐ Tank DF-28-990

Other Tank Options: (bowl to be purchased separately)

☐ Insulated Tank DF-28-992

Fixtures:

Configuration	two-piece, elongated
Water per Flush	1.1/1.6 gpf (4.0/6.0 Lpf)
Rough-In	12″
Height	28″
Width	17 1/2″
Depth	28 1/8″
Trapway	2″
Large Water Surface	10 7/8″ X 7 1/2″
Shipping Weight	84 lbs

Optional Accessories: (to be purchased separately)

Soft Close Toilet Seat	99-213

Colors/Finishes:

- White
- Other: Refer to Price Book for additional colors/finishes

Warranty:

- Limited lifetime warranty

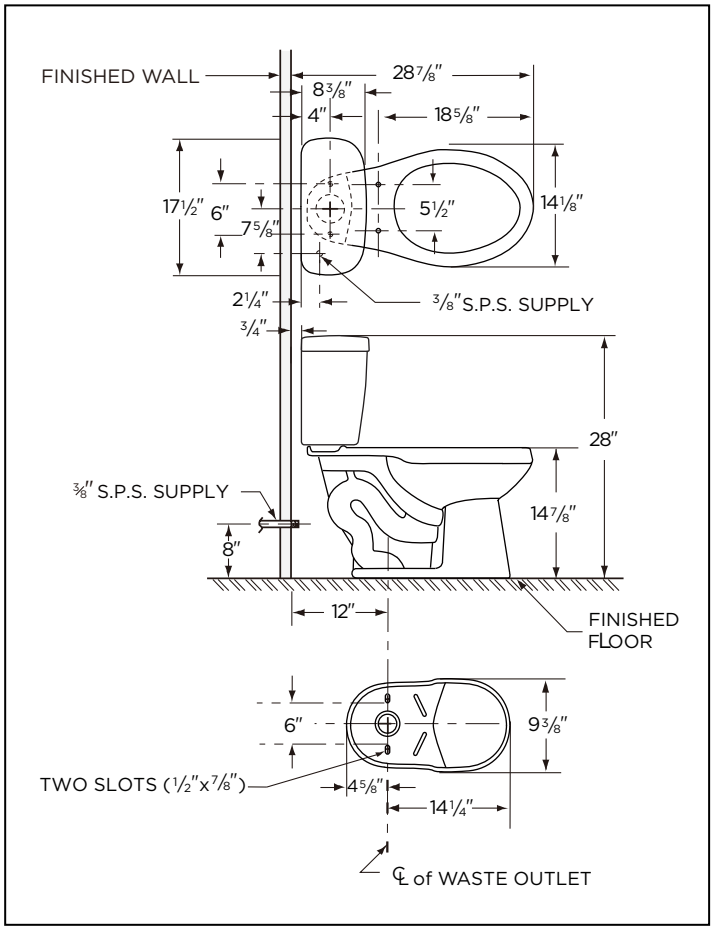

HIGH EFFICIENCY TOILET HET

NOTES: All dimensions are in inches. Illustrations may not be drawn to scale.

IMPORTANT:
Dimensions of fixtures are nominal and may vary within the range of tolerances established by ASME standard A 112.19.2 THIS FIXTURE QUALIFIES ACCORDING TO ASME TEST PROCEDURES AS A HIGH EFFICIENCY WATER CLOSET WITH AN AVERAGE CONSUMPTION OF 1.28 gpf (4.8 Lpf) OR LESS.