0827NL & 0827CNL SERIES - NO LEAD FORGED BRASS FULL PORT BALL VALVE

SPECIFICATIONS:

NO LEAD <0.25% Pb by weighted avg.

THIRD PARTY CERTIFIED TO NSF / ANSI 372

- Rated 600 PSI CWP
- Cold Working Pressure (CWP) is an indication of the pressure rating for valves at a temperature range of up to 100°F (37°C)
- Working Temperature: -20 - 300 °F (-28 - 149 °C)
- Full port
- Forged brass body
- Blow-out proof stem
- Solid Stainless Steel Ball - sizes 1/4" through 1"
- Hollow Stainless Steel Ball - sizes 1-1/4" through 4"
- Chrome plated steel handle with vinyl grip

PRESSURE & TEMPERATURE RATINGS:

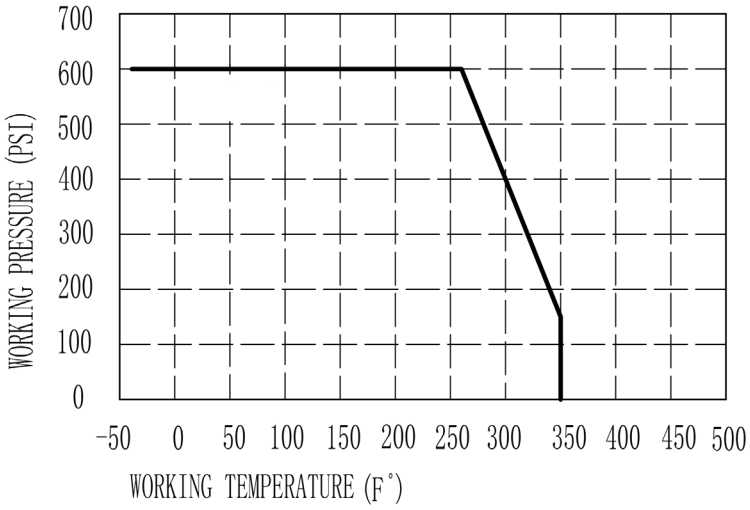

CERTIFICATIONS:

- NSF/ANSI Standard 61 Certified (Drinking Water Components - Lead Content)
- NSF/ANSI Standard 372 Certified (Drinking Water Components - Health Effects)
- cUPC Standard Z1157 Certified - sizes 1/4" - 2" only (Guide Criteria for Ball Valves)
- UL listed to the following standards:
  - UL 1477 (YQNZ): Compressed gas shutoff valves - 600 PSI (1/4" to 1"), 300 PSI (1-1/4" to 2"), 250 PSI (2-1/2"-4")
  - UL 842 (YRBX): Flammable liquid shutoff valves - 600 PSI (1/4" to 1"), 300 PSI (1-1/4" to 2"), 250 PSI (2-1/2"-4")
  - UL 842 (YRPV): Gas shutoff valves - 600 PSI (1/4" to 1"), 300 PSI (1-1/4" to 2"), 250 PSI (2-1/2"-4" threaded only)
  - UL 842 (MHKZ): Manual valves - 600 PSI (1/4" to 1"), 300 PSI (1-1/4" to 2"), 250 PSI (2-1/2"-4" CxC only)
  - UL 125 (YSDT): LP-Gas shutoff valves - 600 PSI (1/4" to 1"), 300 PSI (1-1/4" to 2"), 250 PSI (2-1/2"-4")
- FM Standard 1140 Certified - sizes 1/4" - 2" only (Approval Standard for Quick Opening Valves 1/4" through 2" Nominal Size)
- CRN Registered

BOSHART INDUSTRIES

25 Whaley Avenue, PO Box 310, Milverton, ON CANADA N0K 1M0
Tel: 800-561-3164

boshart.com ♦ blog.boshart.com

© 2020 Boshart Industries Inc. All Rights Reserved.

0827NL SERIES - NL FORGED BRASS FULL PORT BALL VALVE (THREADED)

- Threads conform to ANSI B1.20.1
- CSA listed to the following standards (1/4"-2" only):
  - ANSI Z21.15 & CGA 9.1: 1/2 PSIG (1/2 PSI)
  - ASME B16.44 & CGA/CR91-002: 5 PSIG (5G)
  - ASME B16.33 & CAN/CGA 3.16: 125 PSIG (BRS125G/ CAN 3.16)

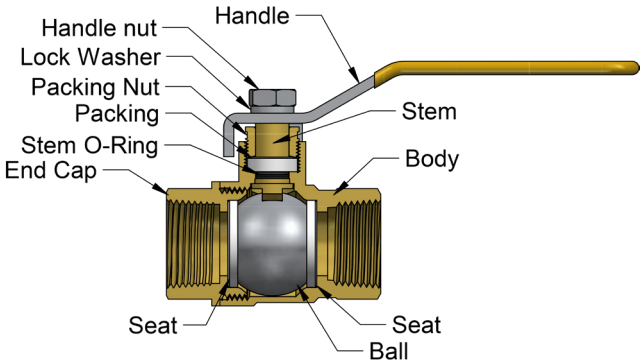

MATERIAL LIST	
Part Name	**Material**
Body/ End Cap	C46500 NL Brass
Seat	PTFE (Polytetrafluoroethylene)
Ball	304 Stainless Steel
Stem O-Ring	Nitrile Butadiene Rubber (NBR)
Packing Nut	C37700 Brass
Stem	C37700 Brass (1/4" - 2")
	304 Stainless Steel (2-1/2" - 4")
Handle Nut	Zinc Plated Steel
Lock Washer	Zinc Plated Steel
Packing	PTFE
Handle	Chrome Plated Steel

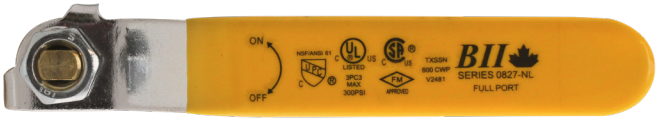

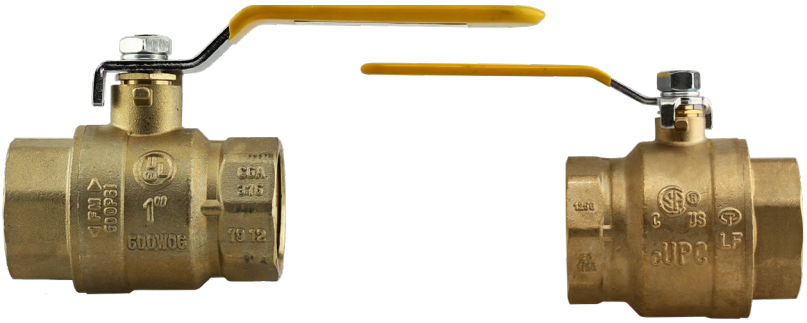

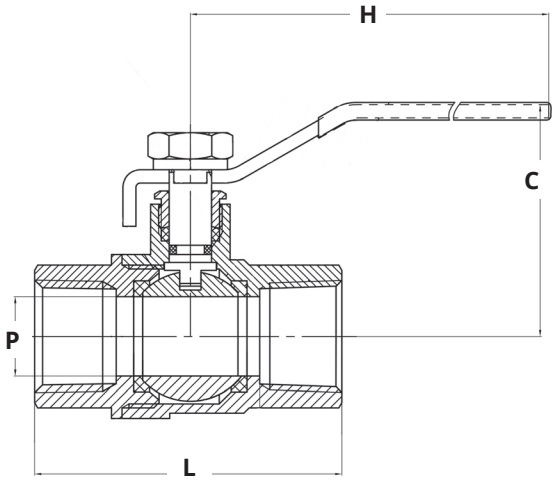

DIMENSIONS											
Part No.	**Description**	**Cv Rating**	**P (Port)**		**L**		**H**		**C**		**Weight**
			in	**mm**	**in**	**mm**	**in**	**mm**	**in**	**mm**	**grams**
0827-02NL	1/4" FPT	8.23	0.39	10.00	1.73	44.00	3.46	88.00	1.68	42.70	140
0827-03NL	3/8" FPT	8.23	0.39	10.00	1.75	44.50	3.46	88.00	1.68	42.70	140
0827-05NL	1/2" FPT	18.55	0.59	15.00	2.24	57.00	3.46	88.00	1.81	46.00	213
0827-07NL	3/4" FPT	29.76	0.75	19.00	2.52	64.00	4.29	109.00	2.09	53.20	344
0827-10NL	1" FPT	51.55	0.98	25.00	2.97	75.50	4.29	109.00	2.25	57.20	521
0827-12NL	1-1/4" FPT	84.42	1.26	32.00	3.44	87.50	5.63	143.00	2.53	64.20	802
0827-15NL	1-1/2" FPT	131.93	1.57	40.00	3.88	98.50	5.63	143.00	2.74	69.70	1079
0827-20NL	2" FPT	200.35	1.94	49.30	4.29	109.00	5.63	143.00	3.04	77.20	1587
0827-25NL	2-1/2" FPT	338.43	2.52	64.00	9.45	240.03	5.22	132.59	4.72	119.89	3256
0827-30NL	3" FPT	445.44	2.89	73.50	9.45	240.03	5.77	146.56	5.32	135.13	4463
0827-40NL	4" FPT	783.88	3.84	97.50	9.53	242.06	7.38	187.45	5.70	144.78	8704

BOSHART INDUSTRIES

25 Whaley Avenue, PO Box 310, Milverton, ON CANADA N0K 1M0
Tel: 800-561-3164

boshart.com • blog.boshart.com

© 2020 Boshart Industries Inc. All Rights Reserved.

0827CNL SERIES - NL FORGED BRASS FULL PORT BALL VALVE (CxC)

- Solder joints conform to ANSI B16.22

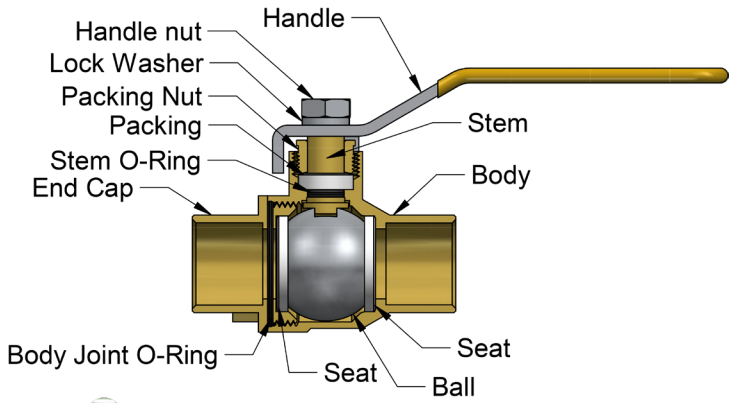

MATERIAL LIST	
Part Name	**Material**
Body/ End Cap	C46500 NL Brass
Seat	PTFE (Polytetrafluoroethylene)
Ball	304 Stainless Steel
Stem O-Ring	Nitrile Butadiene Rubber (NBR)
Packing Nut	C37700 Brass
Stem	C37700 Brass (1/2" - 2")
	304 Stainless Steel (2-1/2" - 4")
Handle Nut	Zinc Plated Steel
Lock Washer	Zinc Plated Steel
Packing	PTFE
Handle	Chrome Plated Steel
Body Joint O-Ring	Fluoro (FPM) Rubber

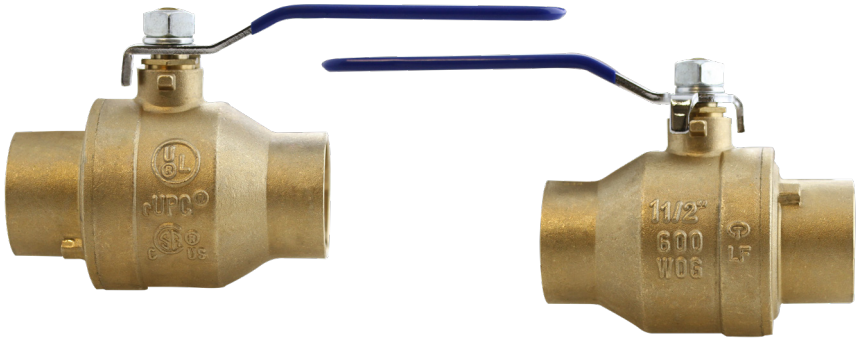

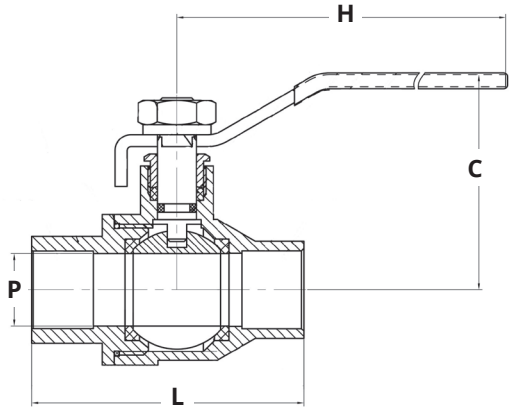

DIMENSIONS											
Part No.	**Description**	**Cv Rating**	**P (Port)**		**L**		**H**		**C**		**Weight**
			in	**mm**	**in**	**mm**	**in**	**mm**	**in**	**mm**	**grams**
0827C-05NL	1/2" CxC	18.55	0.59	15.00	2.17	55.00	3.46	88.00	1.81	46.00	190
0827C-07NL	3/4" CxC	29.76	0.75	19.00	2.81	71.50	4.29	109.00	2.09	53.20	308
0827C-10NL	1" CxC	51.55	0.98	25.00	3.34	84.80	4.29	109.00	2.25	57.20	485
0827C-12NL	1-1/4" CxC	84.42	1.26	32.00	3.91	99.40	5.63	143.00	2.53	64.20	743
0827C-15NL	1-1/2" CxC	131.93	1.57	40.00	4.46	113.40	5.63	143.00	2.74	69.70	1043
0827C-20NL	2" CxC	200.35	1.94	49.30	5.45	138.50	5.63	143.00	3.04	77.20	1646
0827C-25NL	2-1/2" CxC	338.43	2.56	65.00	5.22	132.60	9.45	240.00	4.72	119.90	3166
0827C-30NL	3" CxC	445.44	2.95	75.00	5.77	146.60	9.45	240.00	5.32	135.10	4018
0827C-40NL	4" CxC	783.88	3.90	99.00	7.38	187.50	9.53	242.10	5.70	144.80	7951

For more information on installation, adjustment, repair & operation, visit Boshart Knowledge Base at

SUPPORT.BOSHART.COM

BOSHART INDUSTRIES

25 Whaley Avenue, PO Box 310, Milverton, ON CANADA N0K 1M0
Tel: 800-561-3164

boshart.com • blog.boshart.com

© 2020 Boshart Industries Inc. All Rights Reserved.