DRAWING NO.
998-99300-000

TOP VIEW

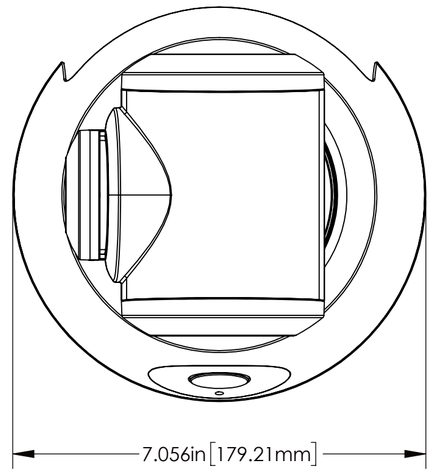

SIDE VIEW 1

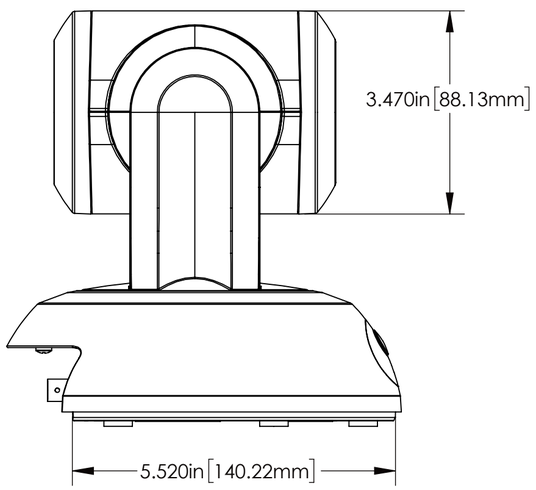

FRONT VIEW

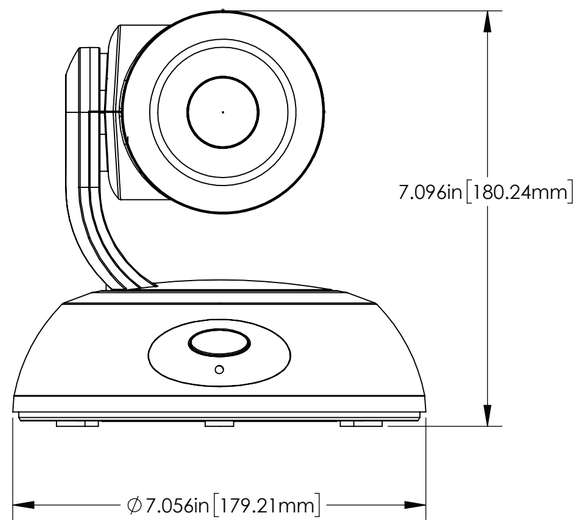

SIDE VIEW 2

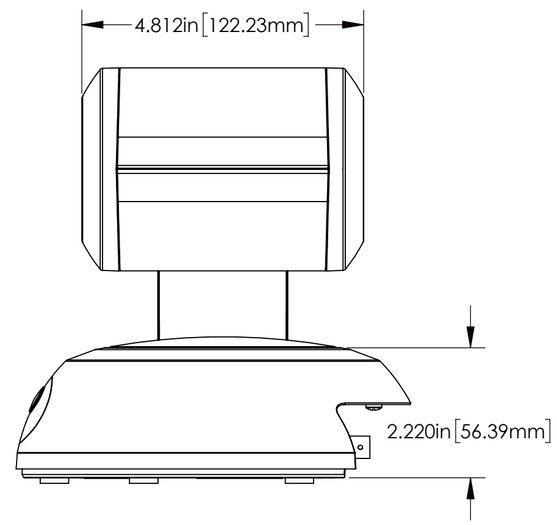

REAR VIEW

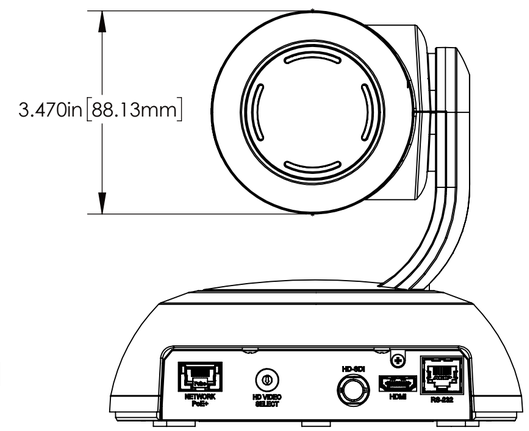

BOTTOM VIEW

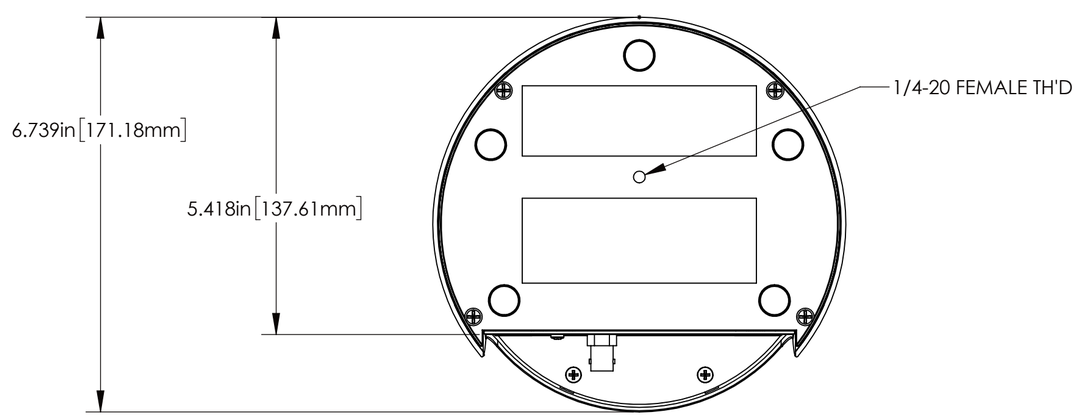

UNLESS OTHERWISE NOTED:

DIMENSIONS ARE IN INCHES

DIMENSIONAL LIMITS APPLY AFTER FINISH

MACHINED SURFACES 125 ✓

EDGES & FILLETS R .005/.015

FRACTIONS ± 1/32

ANGLES ± 1°

DEC. .XX = ± .015
.XXX = ± .005
.XXXX = ± .0002

THIS DRAWING, INCLUDING ALL SUBJECT MATTERS INDICATED THERON OR DERIVED THEREFROM, COMPRISES PROPRIETARY INFORMATION AND IS THE EXPRESS PROPERTY OF LEGRAND AV INC. EMPLOYMENT, REPRODUCTION OF OR DISSEMINATION OF THIS DRAWING, IN WHOLE OR IN PART, WITHOUT WRITTEN PERMISSION OF LEGRAND AV INC IS STRICTLY FORBIDDEN.

vaddio®

DRAWN	CHECKED	APPROVED	DATE
WLF			4/30/19

MATERIAL	SIZE
VARIOUS	C

FINISH	SCALE
NONE	1:2

TITLE	SHEET	DRAWING NO.	REV.
ROBOSHOT ELITE SDI CAMERA	1 OF 1	998-99300-000	A