REV	DESCRIPTION	REV BY	REV DATE	APP'D BY	DATE APP.
-	PRODUCTION RELEASE	///	/////	MC	04/22/16
A	EC 15693 - CHANGED NOTATION TO INCLUDE 20A MODEL	TJL	05/09/23	JJP	05/10/23

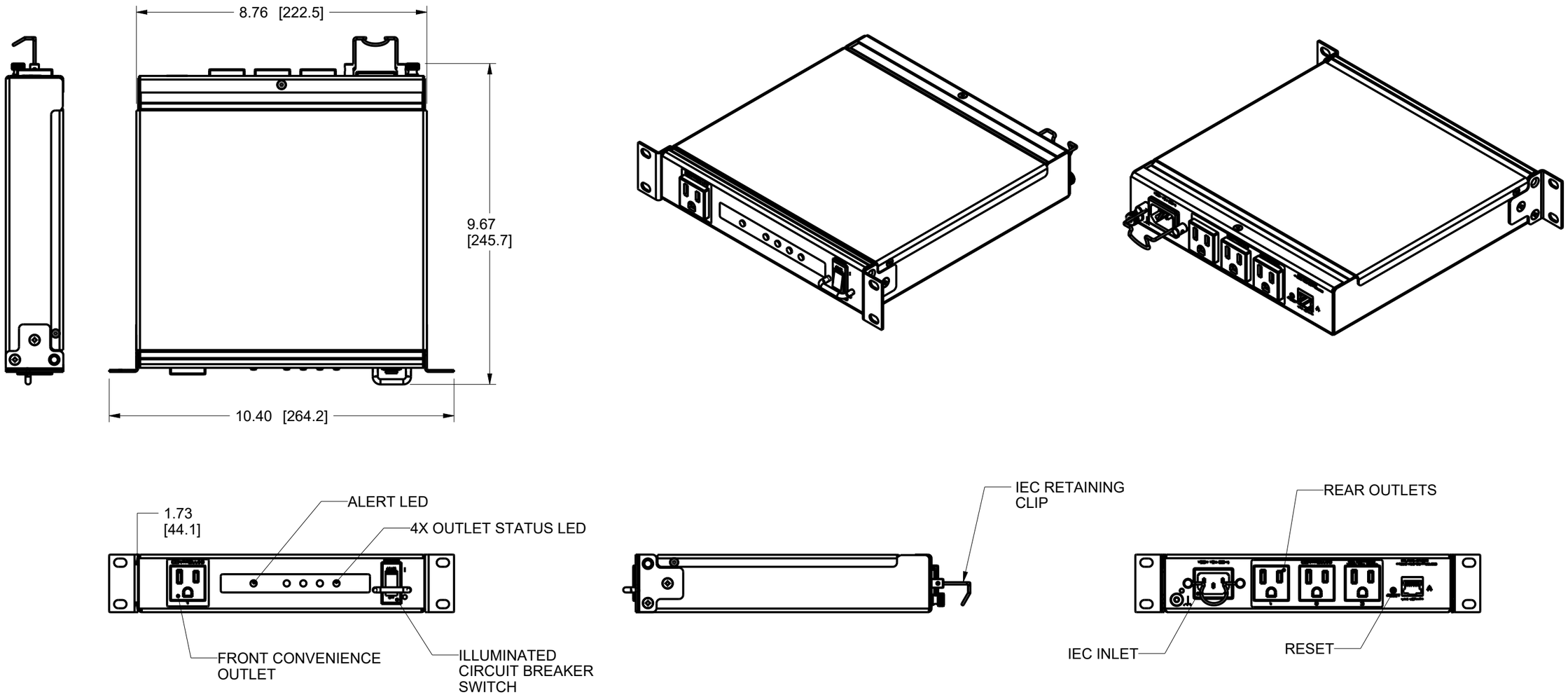

RLNK-415R & RLNK-420R

NOTES(S):
1. MODEL NUMBERS RLNK-415R AND RLNK-420R ARE SHOWN
2. DIMENSIONS ARE IN THE FORMAT IN [MM]

USED ON: RLNK-415R	APPROVALS	DATE	Middle Atlantic Products, Inc
	MODELED LM	04/15/16	
	DRAWN LM	04/16/16	
NEXT ASSY: - -	CIRCLED DIMENSIONS ARE CRITICAL INSPECTION DIMENSIONS		TITLE RLNK GEN3 SELECT RACKMOUNT
MATERIAL: SEE COMPONENTS	UNLESS OTHERWISE SPECIFIED, ALL DIMENSIONS ARE IN INCHES GENERAL TOLERANCES: DEC: 1 PLACE +/-0.1 ANGLE: +/-2° 2 PLACE +/-.03 FRAC: +/-1/32 3 PLACE +/-.010 HOLE SIZE: +/-0.002		PART NO. 96-01237_RLNK-415R PART REV -
FINISH: - - - -	SCALE = 5/16	PROJECTION: 3rd ANGLE	SIZE B DXF NO. NONE
	SHEET 1 OF 2		DWG NO. 96-01237 DWG REV A

THIS DRAWING CONTAINS TRADE INFORMATION DEEMED TO BE CONFIDENTIAL AND PROPRIETARY PROPERTY OF MIDDLE ATLANTIC PRODUCTS, INC. AND IS TO BE USED ONLY FOR THE PURPOSES FOR WHICH IT IS SUBMITTED AND FURTHER SHALL NOT BE COPIED IN WHOLE OR PART WITHOUT WRITTEN PERMISSION FIRST OBTAINED FROM MIDDLE ATLANTIC PRODUCTS, INC.

DEF-00111 REV K 07/22/21

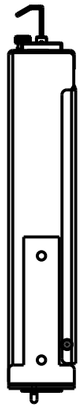

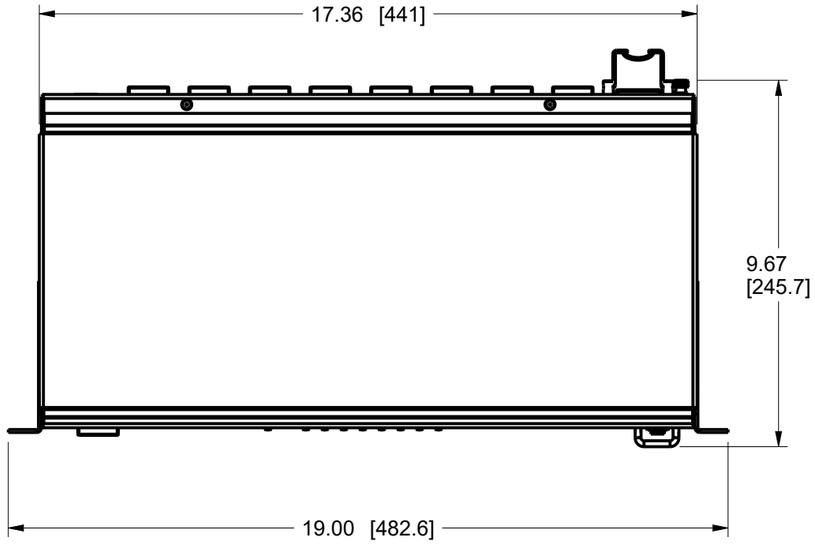

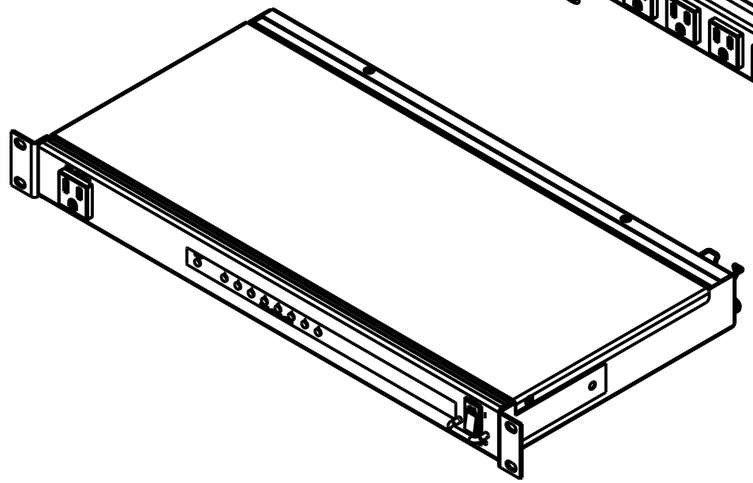

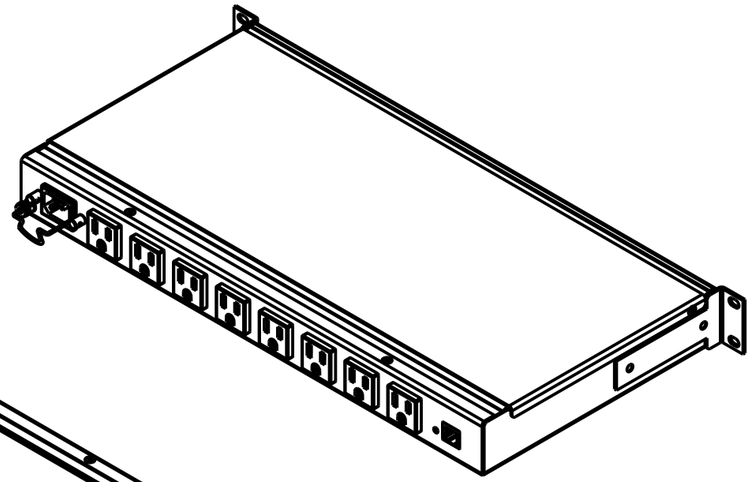

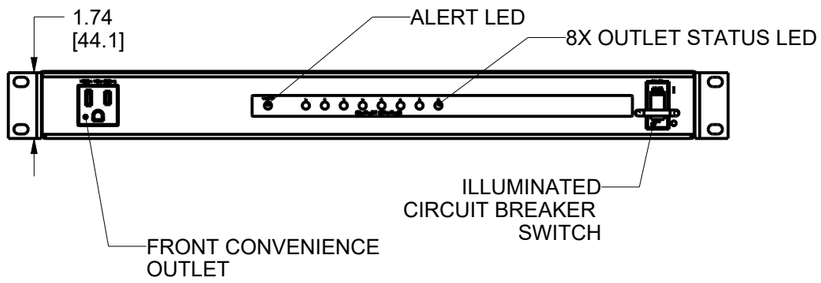

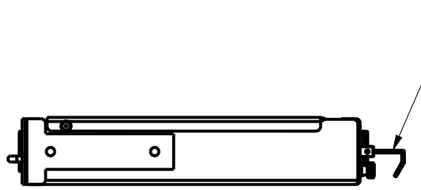

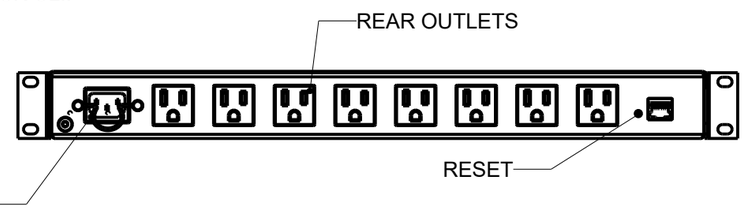

RLNK-915R & RLNK-920R

NOTES(S):
1. MODEL NUMBERS RLNK-915R AND RLNK-920R ARE SHOWN
2. DIMENSIONS ARE IN THE FORMAT IN [MM]

USED ON: RLNK-915R	APPROVALS	DATE
	MODELED LM	04/15/16
	DRAWN LM	04/16/16
NEXT ASSY: - -	CIRCLED DIMENSIONS ARE CRITICAL INSPECTION DIMENSIONS	
MATERIAL: SEE COMPONENTS	UNLESS OTHERWISE SPECIFIED, ALL DIMENSIONS ARE IN INCHES GENERAL TOLERANCES: DEC: 1 PLACE +/-0.1 ANGLE: +/-2° 2 PLACE +/-.03 FRAC: +/-1/32 3 PLACE +/-.010 HOLE SIZE: +/-0.002	
FINISH: - - - -	SCALE = 1/4	PROJECTION: 3RD ANGLE
	SHEET 2 OF 2	

Middle Atlantic Products, Inc

TITLE	RLNK GEN3 SELECT RACKMOUNT	
PART NO.	96-01237_RLNK-915R	PART REV -
SIZE B	DXF NO. NONE	
DWG NO.	96-01237	DWG REV A

THIS DRAWING CONTAINS TRADE INFORMATION DEEMED TO BE CONFIDENTIAL AND PROPRIETARY PROPERTY OF MIDDLE ATLANTIC PRODUCTS, INC. AND IS TO BE USED ONLY FOR THE PURPOSES FOR WHICH IT IS SUBMITTED AND FURTHER SHALL NOT BE COPIED IN WHOLE OR PART WITHOUT WRITTEN PERMISSION FIRST OBTAINED FROM MIDDLE ATLANTIC PRODUCTS, INC.

DO NOT SCALE DRAWING